01_Block Diagram
02_System Setting
03_Power Sequence
04_Clock Gen_ICS9LPR434
05_Diamondville_BUS
06_Diamondville_PWR
07_NB-945GMS(HOST)
08_NB-945GMS(DMI)
09_NB-945GMS(GRAPHIC)
10_NB-945GMS(DDR2)
11_NB-945GMS(PWR)
12_NB-945GMS(PWR2)
13_NB-945GMS(GND)
14_SB-ICH7M(PWR)
15_SB-ICH7M(1)
16_SB-ICH7M(2)
17_SB-ICH7M(3)
18_DDR2 SODIMM
19_DDR2_Termination
20_Onboard VGA
21_LCD Conn_LID
22_Blank
23_Mini WIFI+ BT
24_LAN_Atheros AR8113
25_RJ45
26_Flash Conn
27_USB Port
28_Camera Conn
29_Card Reader_AU6372A51
30_Codec_ALC269
31_Audio_AMP_Jack
32_EC_ENE KB3310
33_EC
34_Switch_SPI ROM_Debug Conn
35_Thermal Sensor_FAN
36_KB_Touch Pad
37_LED_THERMTRIP
38_Discharge
39_PWR Jack
40_Srew Hole
41_EMI
42_POWER FLOW
43_Vcore
44_Power System
45_Power_+1.8V & VTTDDR
46_Power_VCCP
47_Power_+1.5VS & +2.5VS
48_Power_Charger
49_EC Pin Define
49_History

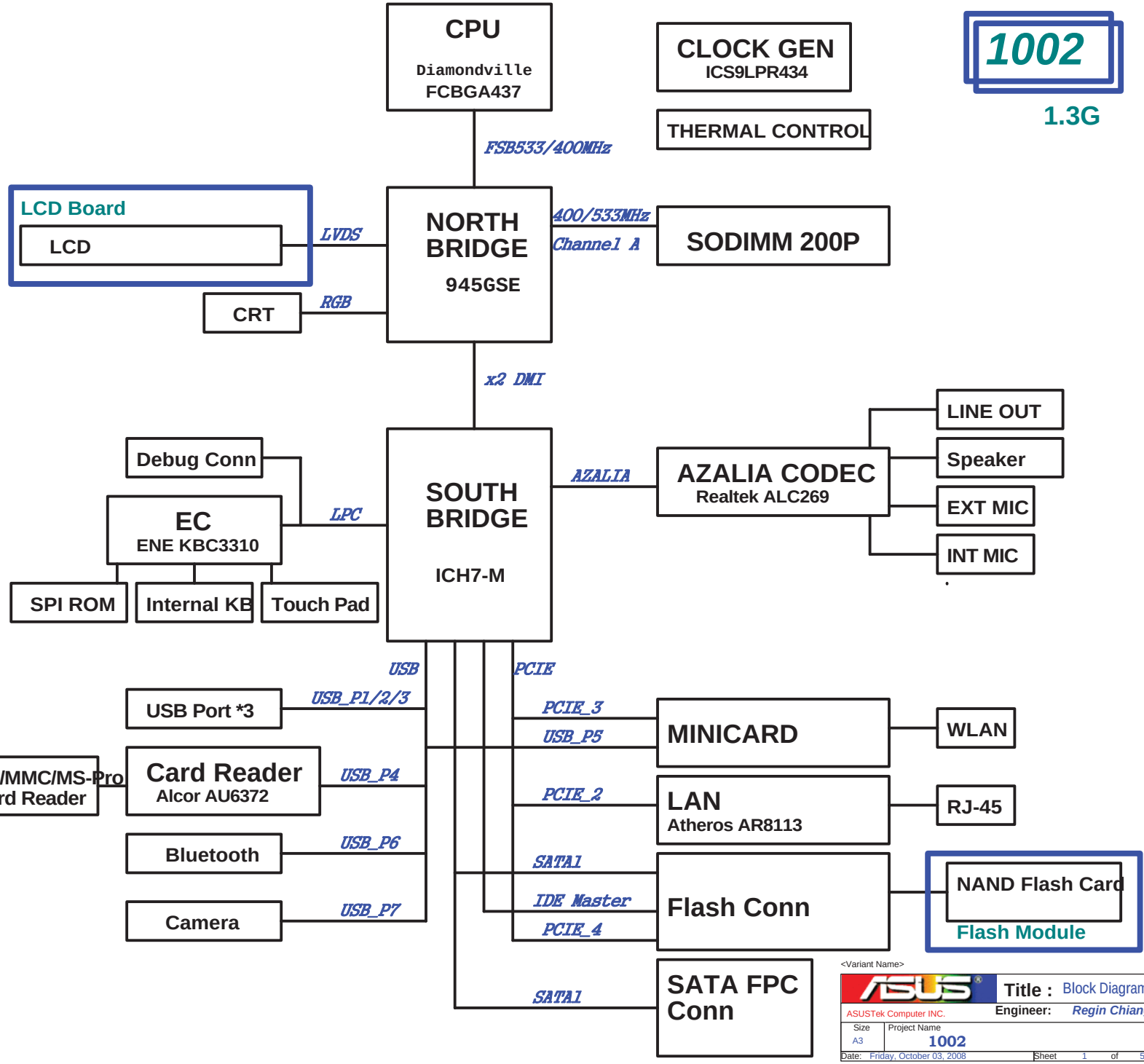

<Variant Name>

ASUSTek Computer INC.

Title : Block Diagram

Engineer: Regin Chiang

Size	Project Name	Rev
A3	1002	1.3G

Date: Friday, October 03, 2008 Sheet 1 of 50

EEE PC 701 PCB version

GPI37	GPI38	GPI39	PCB version
0	0	0	
0	0	0	
0	0	1	
0	0	1	
0	1	0	
0	1	0	
0	1	1	
0	1	1	
1	0	0	
1	0	0	
1	0	1	
1	0	1	
1	1	0	
1	1	0	
1	1	1	
1	1	1	

USB

USB 0	NC
USB 1	USB Conn
USB 2	USB Conn
USB 3	USB Conn
USB 4	Card Reader
USB 5	Minicard
USB 6	Bluetooth
USB 7	Camera

PCIE

PCIE 1	NC
PCIE 2	LAN
PCIE 3	Minicard
PCIE 4	SSD

Azalia

ACZ_SDIN0	CODEC
ACZ_SDIN1	NC
ACZ_SDIN2	NC

<Variant Name>

ASUSTek Computer INC.

Title : System Setting

Engineer: Satan_He

Size	Project Name	Rev
A3	S101	1.3G

Date: Friday, October 03, 2008 Sheet 2 of 50

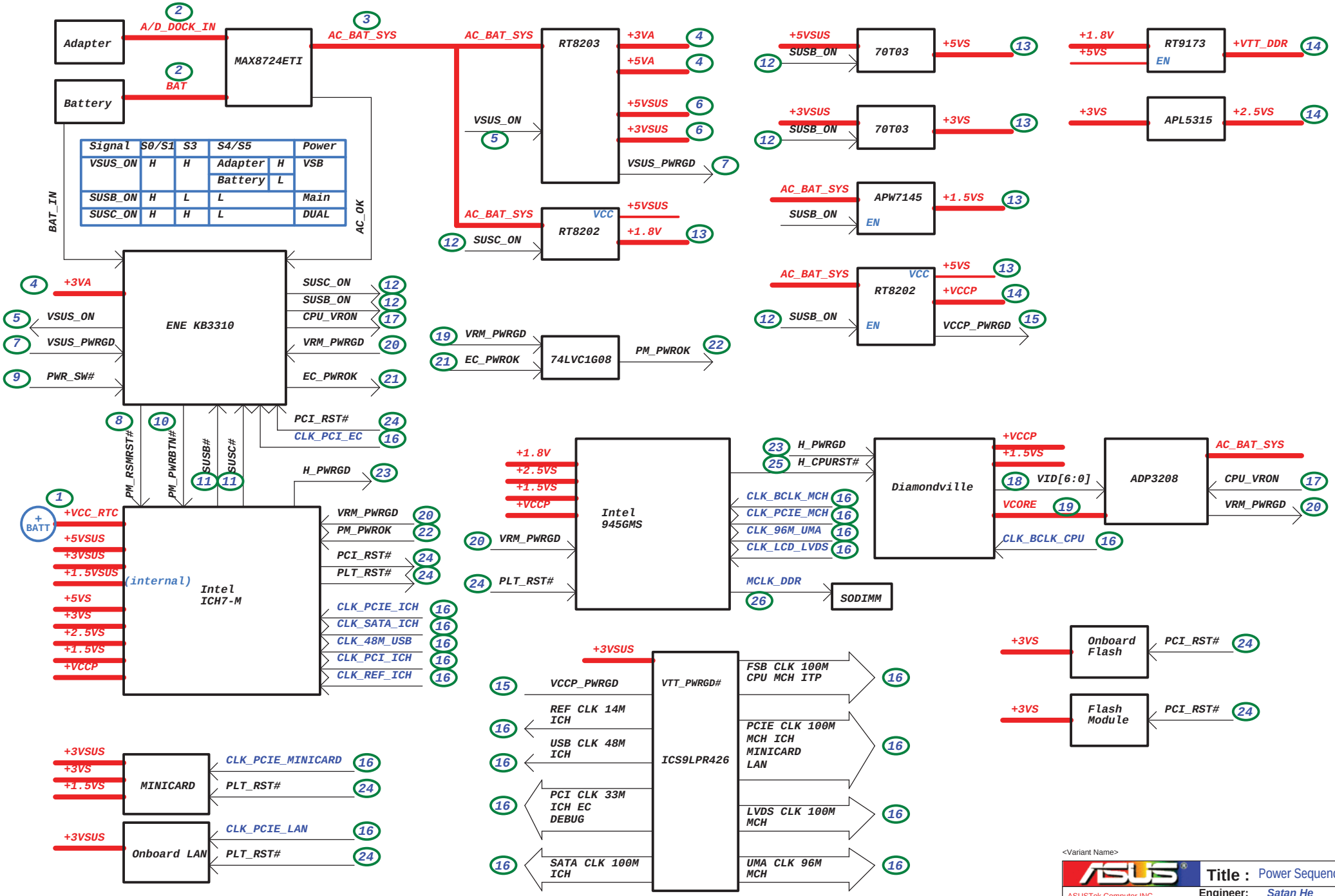

<Variant Name>

ASUSTek Computer INC.

Title : Power Sequence

Engineer: Satan He

Size	Project Name	Rev
A3	1002	1.3G

Date: Friday, October 03, 2008 Sheet 3 of 50

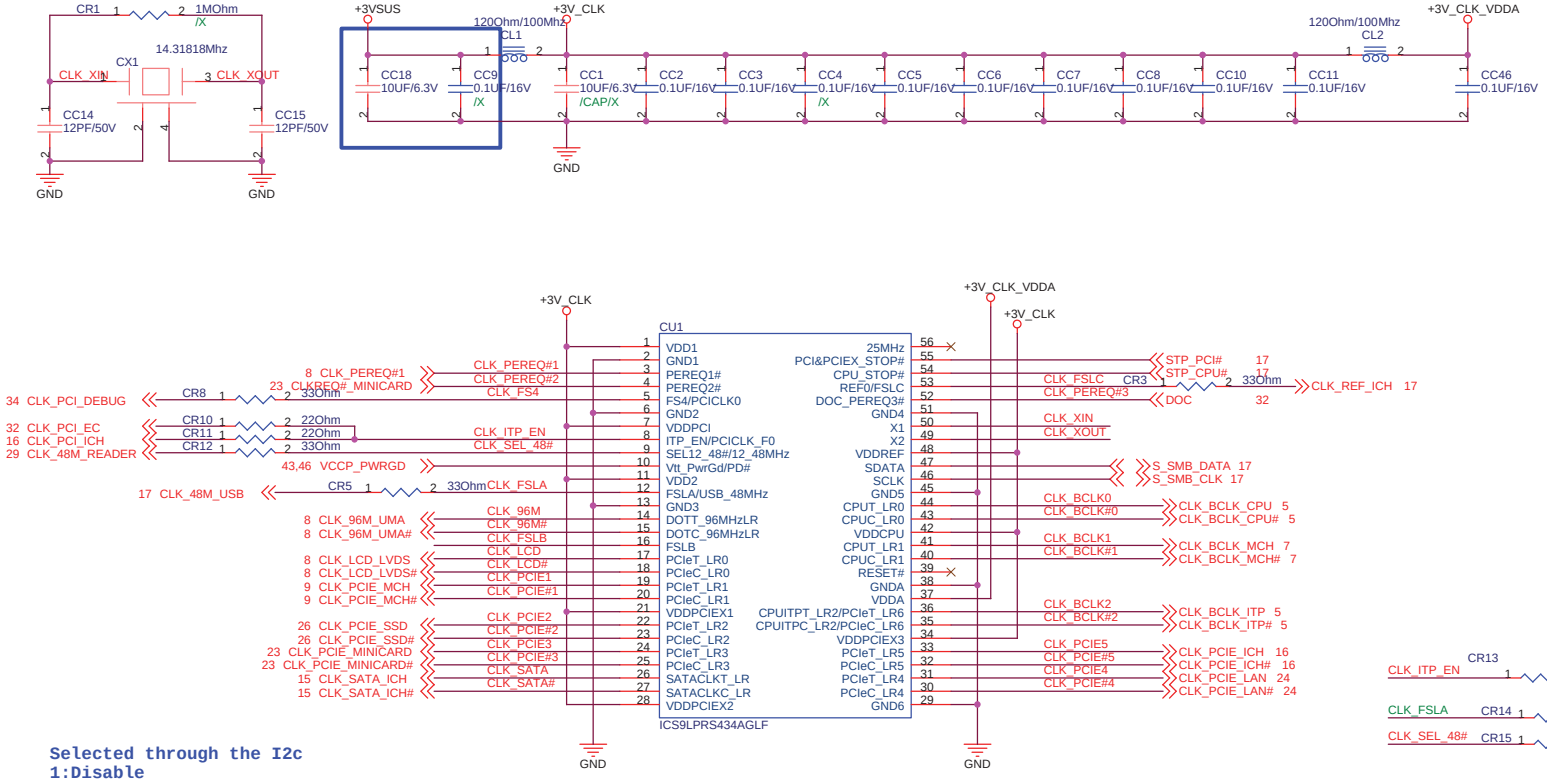

Selected through the I2c
1:Disable
0:Enable

PEREQ1:PCIEx0 & PCIEx1
PEREQ2:PCIEx2 & PCIEx3 & SATA
PEREQ3:PCIEx4 & PCIEx5 & PCIEx6

FSC	FSB	FSA	CPU	PCIE	SATA
0	0	1	133	100	100
1	0	1	100	100	100

H148-H151 reserve to place GASKET for EMI

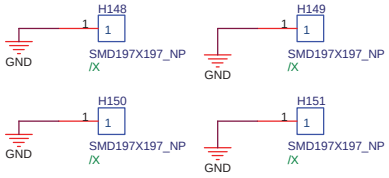

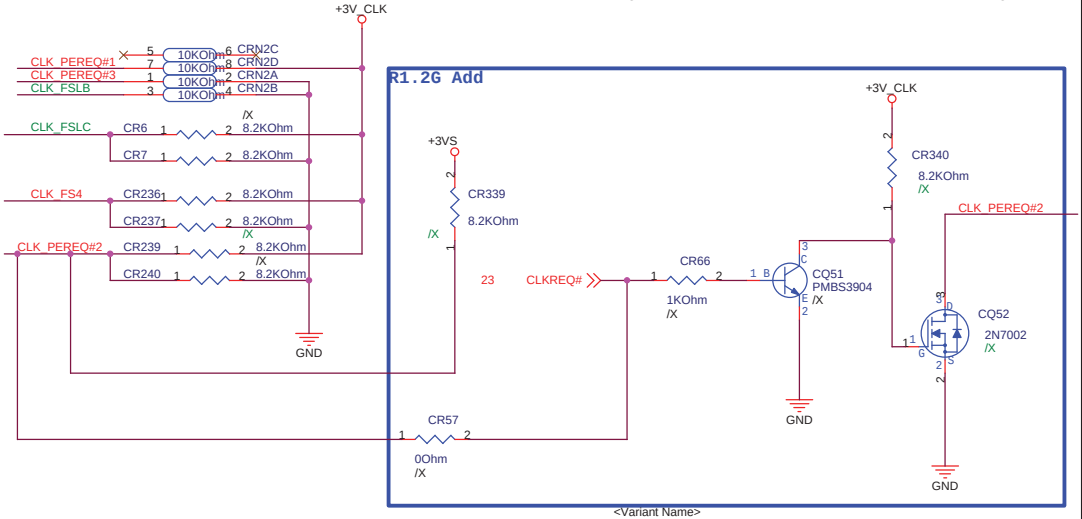

<Variant Name>

ASUSTek Computer INC.

Title : Clock Gen_ICS9LPRS434

Engineer: Satan He

Size	Project Name	Rev
A3	1002	1.3G

Date: Friday, October 03, 2008 Sheet 4 of 50

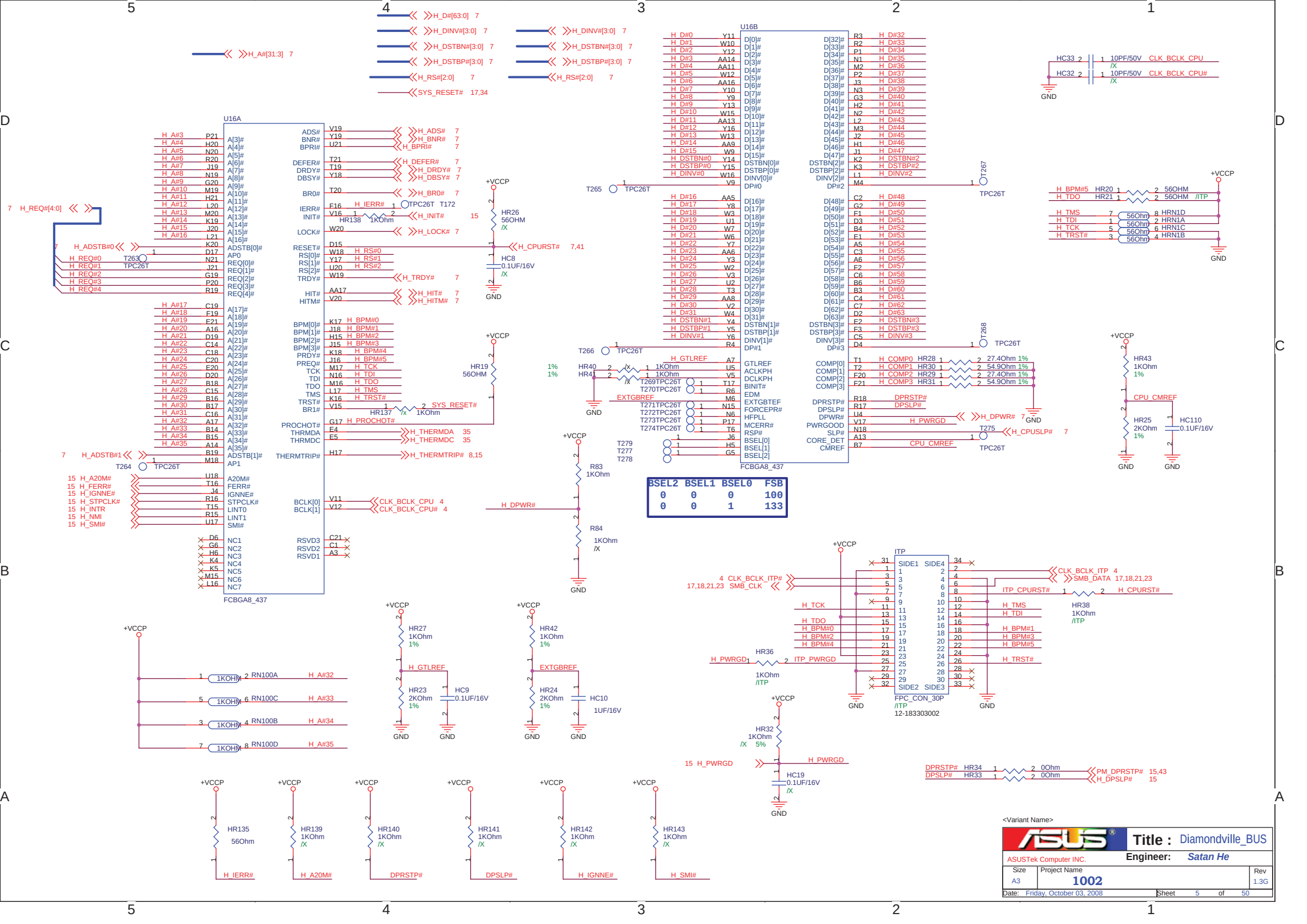
U16A
FCBGA8_437
U16B
FCBGA8_437
ITP
FPC_CON_30P
/ITP
12-183303002
BSEL2 BSEL1 BSEL0 FSB
0 0 0 100
0 0 1 133
<Variant Name>
Title : Diamondville_BUS
ASUSTek Computer INC.
Engineer: Satan He
Size A3
Project Name 1002
Rev 1.3G
Date: Friday, October 03, 2008
Sheet 5 of 50

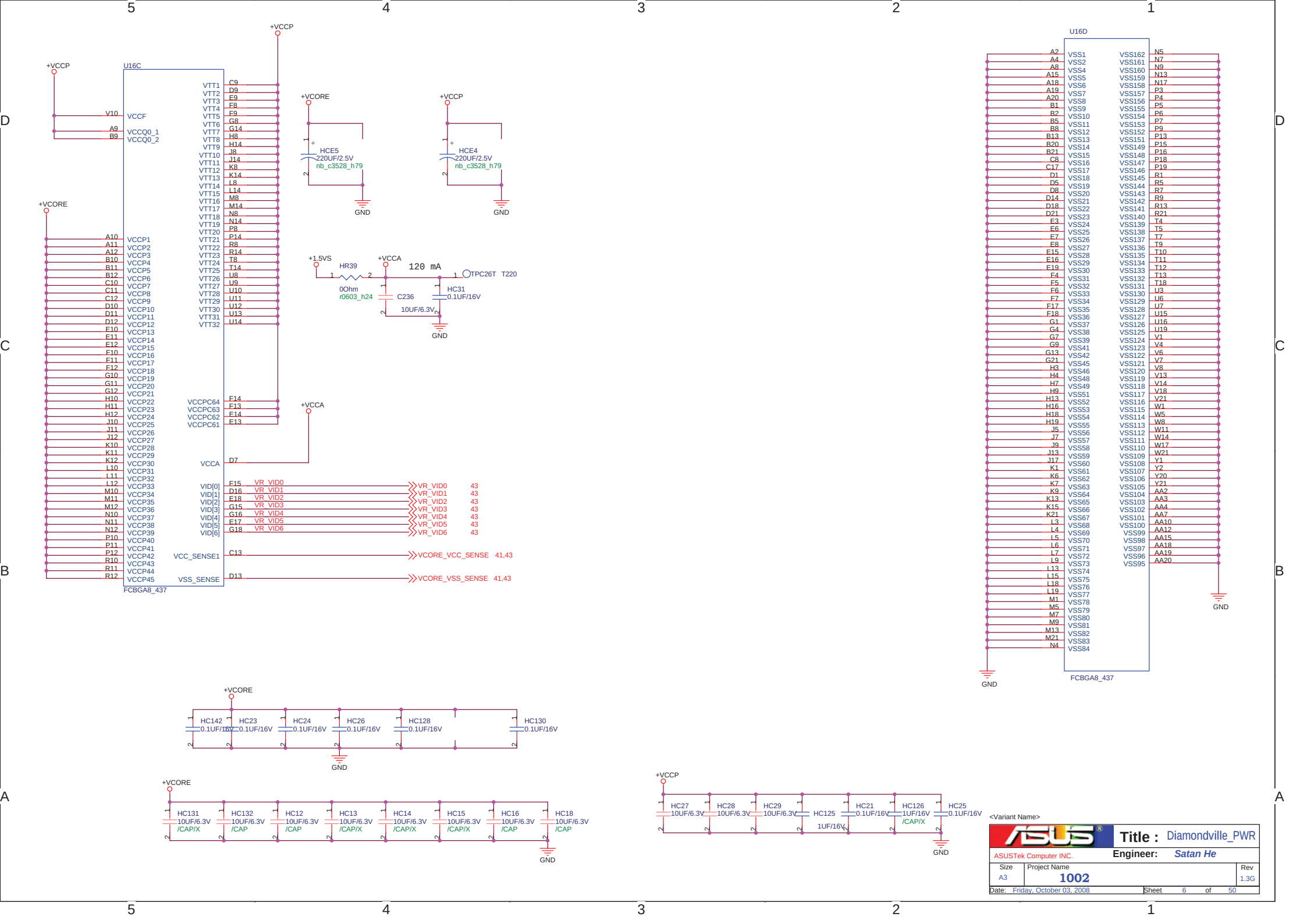
U16C
FCBGA8_437
+VCCP
+VCORE
+VCCA
+1.5VS
GND
HCE5
220UF/2.5V
nb_c3528_h79
HCE4
220UF/2.5V
nb_c3528_h79
HR39
0Ohm
r0603_h24
C236
10UF/6.3V
HC31
0.1UF/16V
120 mA
TPC26T T220
VCCF
VCCQ0_1
VCCQ0_2
VCCP1
VCCP2
VCCP3
VCCP4
VCCP5
VCCP6
VCCP7
VCCP8
VCCP9
VCCP10
VCCP11
VCCP12
VCCP13
VCCP14
VCCP15
VCCP16
VCCP17
VCCP18
VCCP19
VCCP20
VCCP21
VCCP22
VCCP23
VCCP24
VCCP25
VCCP26
VCCP27
VCCP28
VCCP29
VCCP30
VCCP31
VCCP32
VCCP33
VCCP34
VCCP35
VCCP36
VCCP37
VCCP38
VCCP39
VCCP40
VCCP41
VCCP42
VCCP43
VCCP44
VCCP45
VTT1
VTT2
VTT3
VTT4
VTT5
VTT6
VTT7
VTT8
VTT9
VTT10
VTT11
VTT12
VTT13
VTT14
VTT15
VTT16
VTT17
VTT18
VTT19
VTT20
VTT21
VTT22
VTT23
VTT24
VTT25
VTT26
VTT27
VTT28
VTT29
VTT30
VTT31
VTT32
VCCPC64
VCCPC63
VCCPC62
VCCPC61
VCCA
VID[0]
VID[1]
VID[2]
VID[3]
VID[4]
VID[5]
VID[6]
VR_VID0
VR_VID1
VR_VID2
VR_VID3
VR_VID4
VR_VID5
VR_VID6
VCC_SENSE1
VSS_SENSE
VCORE_VCC_SENSE 41,43
VCORE_VSS_SENSE 41,43
U16D
FCBGA8_437
HC142
HC23
HC24
HC26
HC128
HC130
0.1UF/16V
HC131
HC132
HC12
HC13
HC14
HC15
HC16
HC18
10UF/6.3V
/CAP/X
/CAP
HC27
HC28
HC29
HC125
HC21
HC126
HC25
1UF/16V
/CAP/X
<Variant Name>
Title : Diamondville_PWR
ASUSTek Computer INC.
Engineer: Satan He
Size A3
Project Name 1002
Rev 1.3G
Date: Friday, October 03, 2008
Sheet 6 of 50

Power : +VCCP

RCOMP

For Calibrating the FSB I/O Buffer

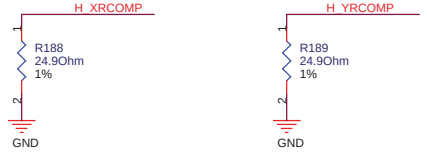

SCOMP

For Slew Rate Compenssation on the FSB



Voltage Swing

For Providing a Reference Voltage to The FSB RCOMP circuits

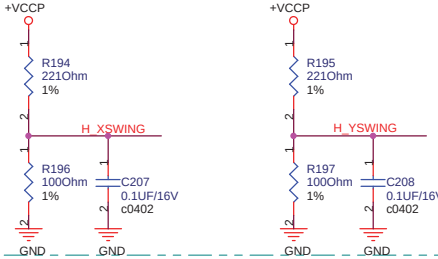

Signal voltage level = 0.3125*VCCP
Trace should be 10 mil wide with 20 mil spacing

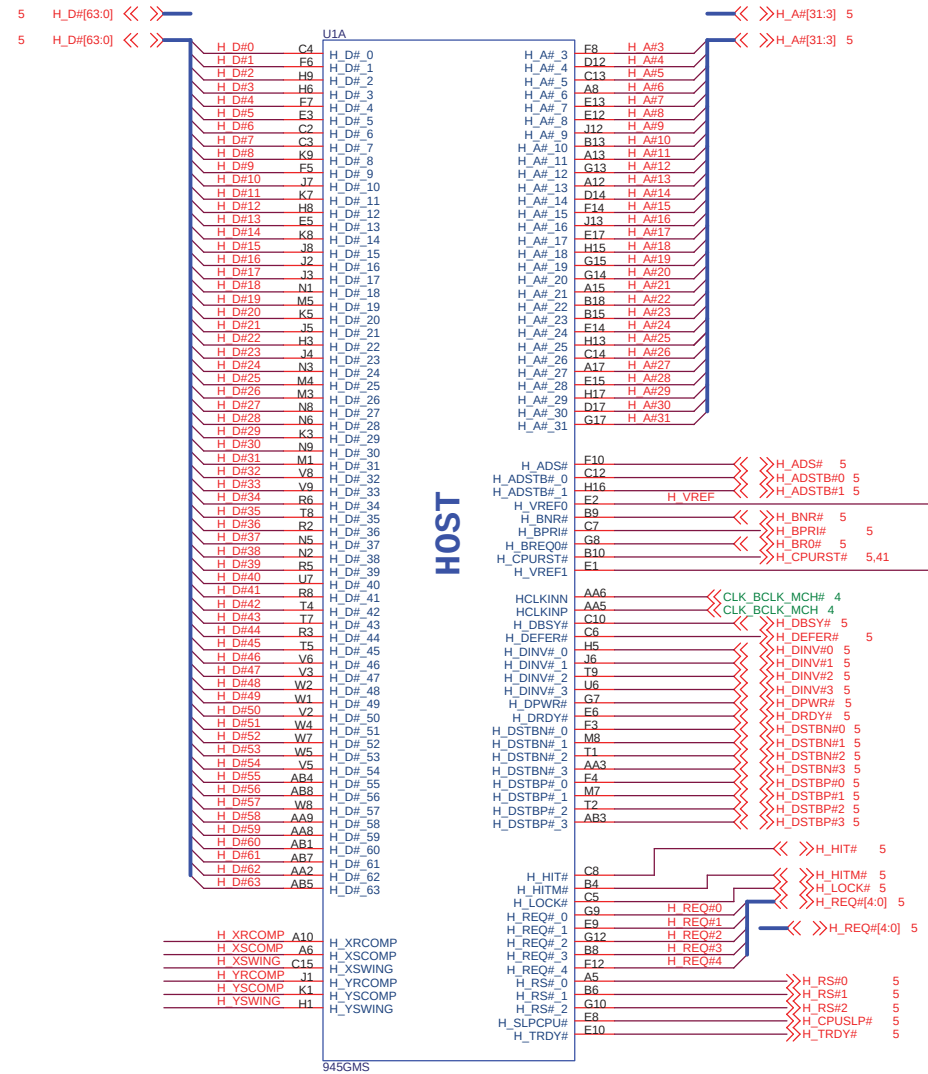

AGTL+ I/O Voltage Reference

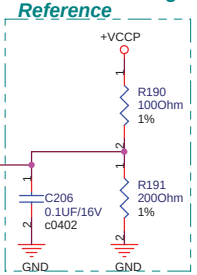

Layout Note:
0.1uF should be placed 100mils or less from GMCH pin.

<Variant Name>

ASUSTeK COMPUTER INC.	Title : NB-945GMS(HOST)	
	Engineer: Satan He	
Size: A3	Project Name: 1002	Rev: 1.3G
Date: Friday, October 03, 2008	Sheet 7 of 50	

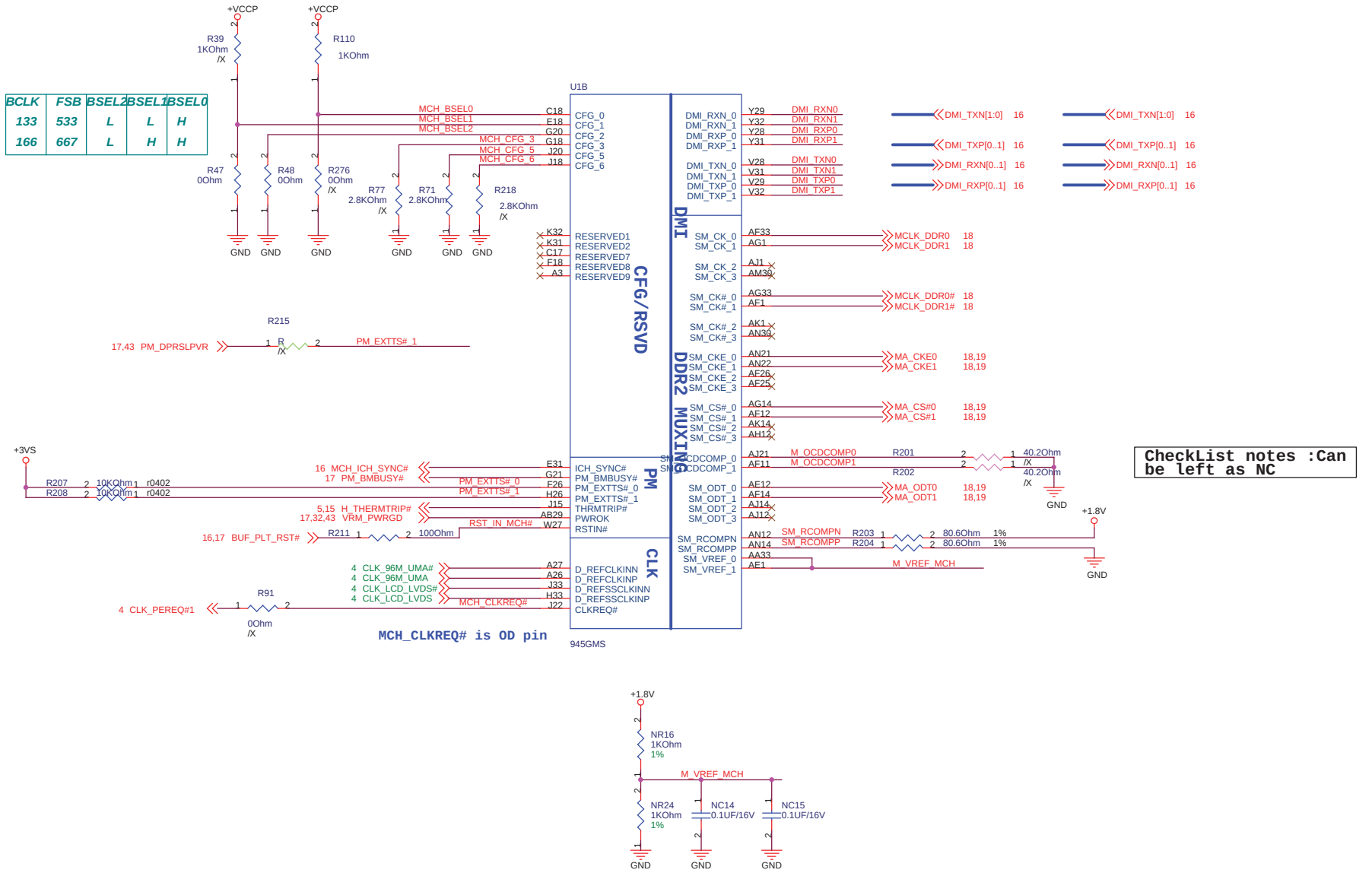

<Variant Name>

ASUSTeK COMPUTER INC.	Title : NB-945GMS(DMI & CFG)	
	Engineer: Satan He	
Size: A3	Project Name: 1002	Rev: 1.3G
Date: Friday, October 03, 2008	Sheet 8 of 50	

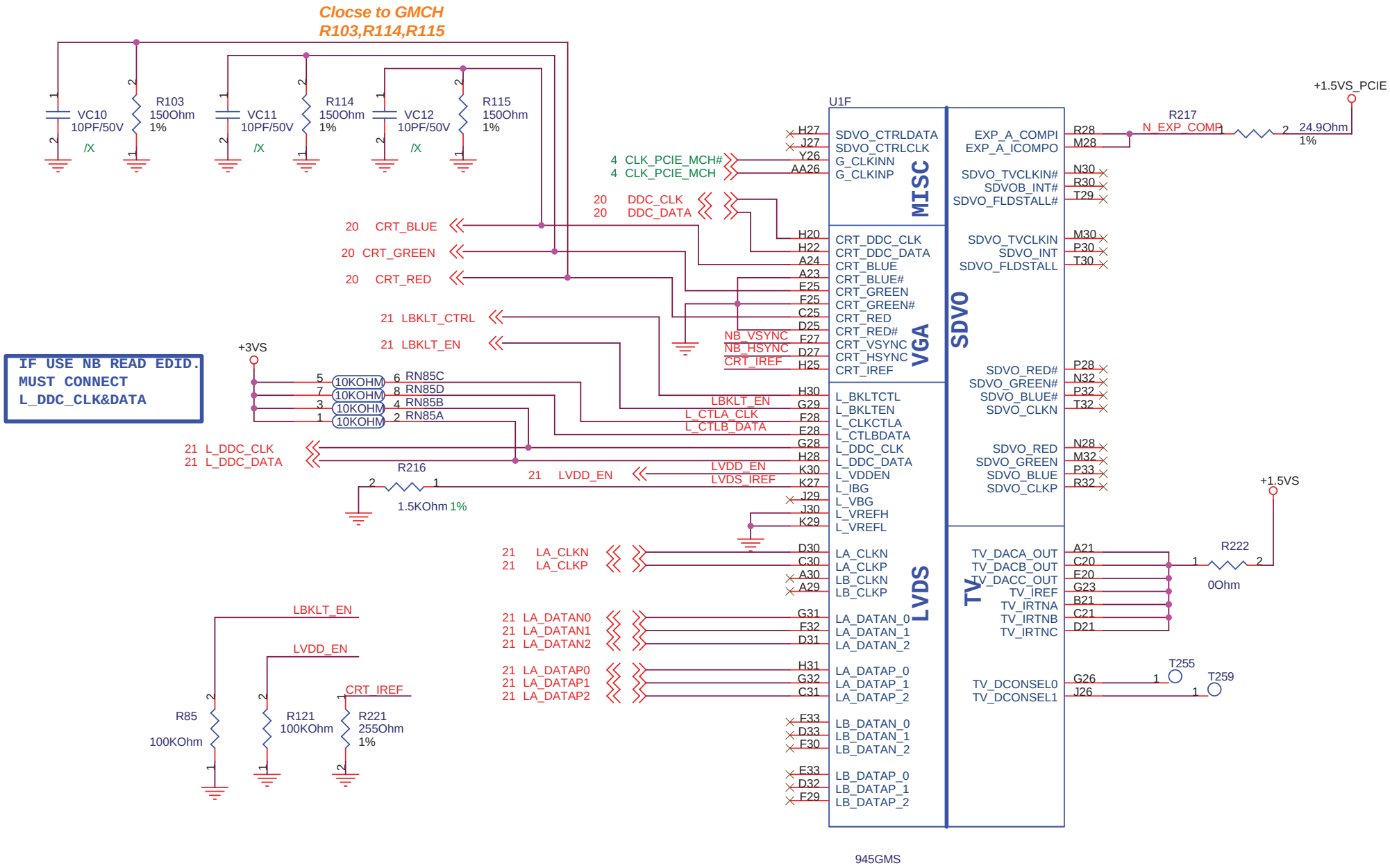

<Variant Name>

ASUSTeK COMPUTER INC.	Title : NB-945GMS(GRAPHIC)	
	Engineer: Satan_He	
Size: A4	Project Name: 1002	Rev: 1.3G
Date: Friday, October 03, 2008	Sheet 9 of 50	

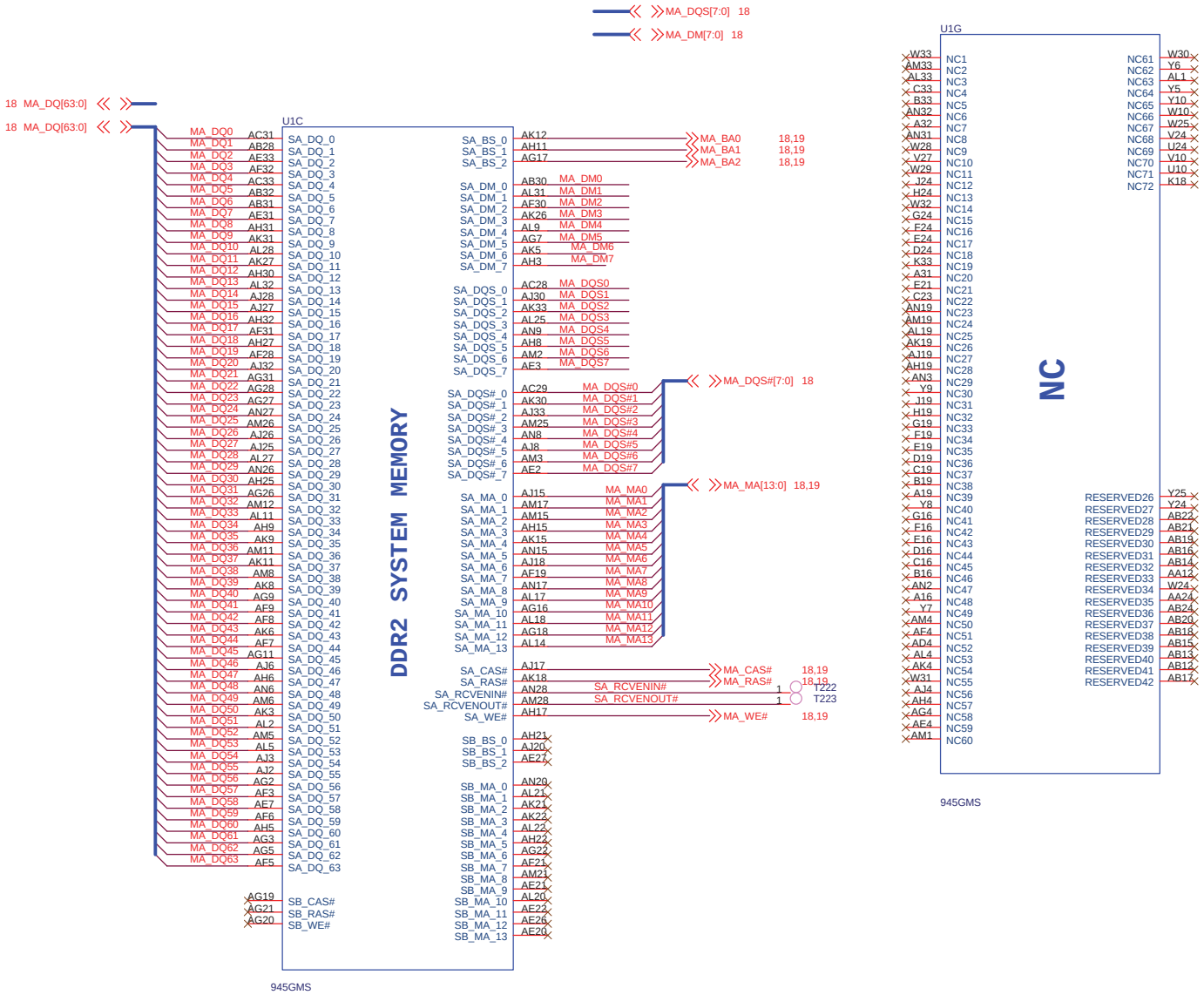

<Variant Name>

ASUSTeK COMPUTER INC.	Title : NB-945GMS(DDR2)	
	Engineer: Satan He	
Size: A3	Project Name: 1002	Rev: 1.3G
Date: Friday, October 03, 2008	Sheet 10 of 50	

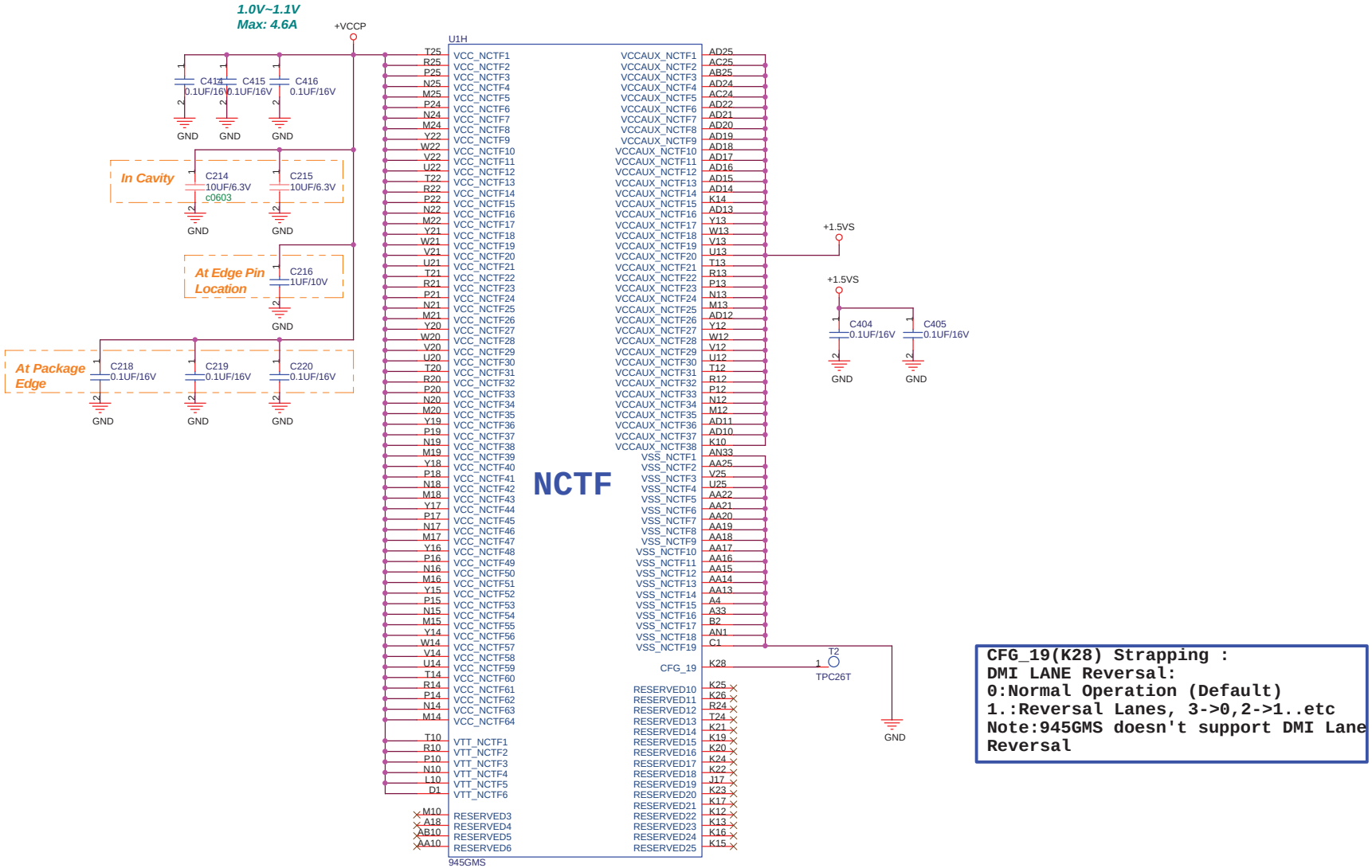

<Variant Name>

ASUSTeK COMPUTER INC.	Title : NB-945GMs(PWR)	
	Engineer: Satan_He	
Size: A3	Project Name: 1002	Rev: 1.3G
Date: Friday, October 03, 2008	Sheet 11 of 50	

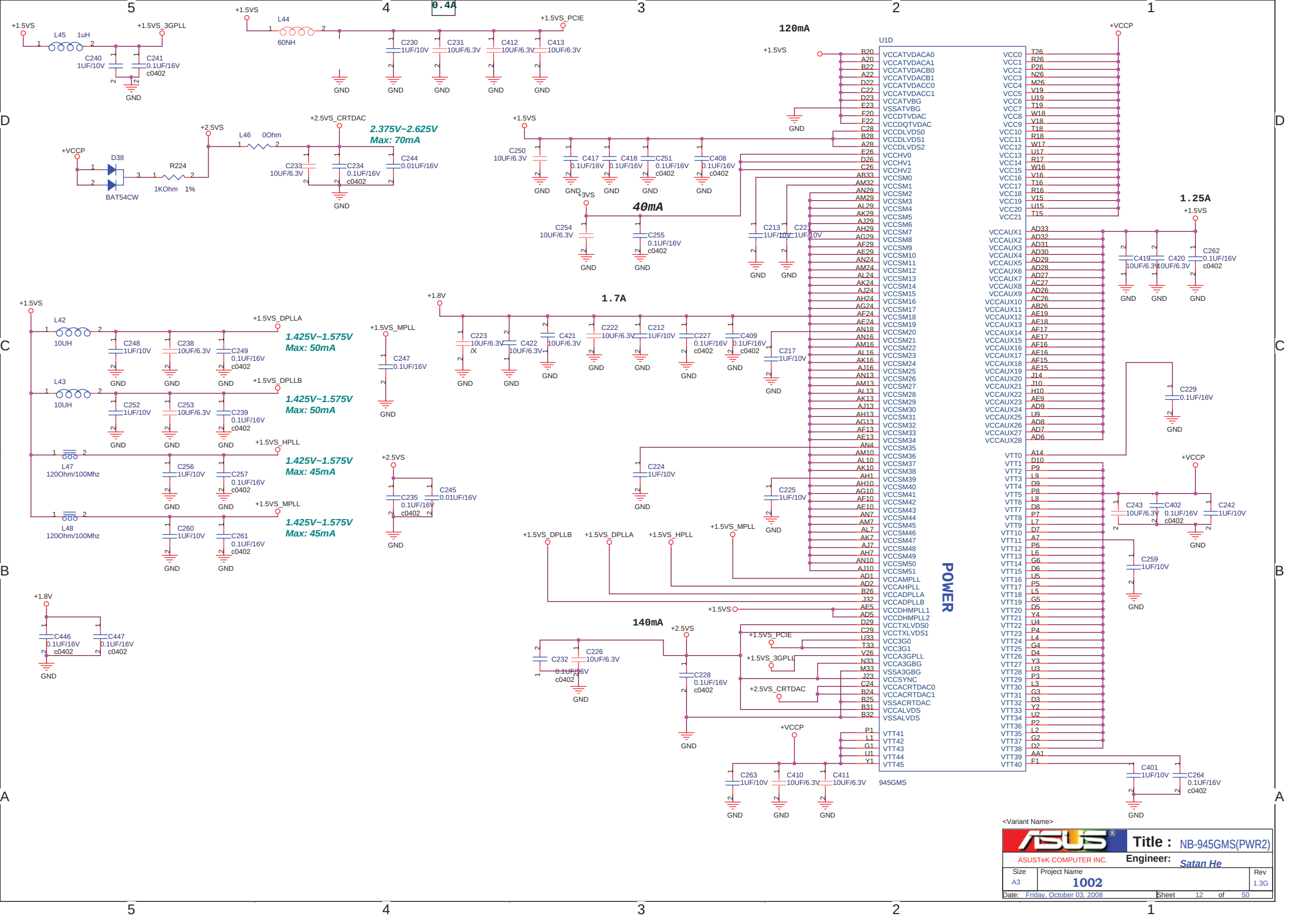
+1.5VS
L45 1uH
+1.5VS_3GPLL
C240 1UF/10V
C241 0.1UF/16V c0402
GND
+1.5VS
L44
60NH
0.4A
+1.5VS_PCIE
C230 1UF/10V
C231 10UF/6.3V
C412 10UF/6.3V
C413 10UF/6.3V
+2.5VS
L46 0Ohm
+2.5VS_CRTDAC
2.375V~2.625V
Max: 70mA
+VCCP
D38
BAT54CW
R224
1KOhm 1%
C233 10UF/6.3V
C234 0.1UF/16V c0402
C244 0.01UF/16V
120mA
U1D
+1.5VS
C250 10UF/6.3V
C417 0.1UF/16V
C418 0.1UF/16V
C251 0.1UF/16V c0402
C408 0.1UF/16V c0402
+3VS
40mA
C254 10UF/6.3V
C255 0.1UF/16V c0402
C213 1UF/10V
C221 1UF/10V
+1.8V
1.7A
C223 10UF/6.3V /X
C422 10UF/6.3V
C421 10UF/6.3V
C222 10UF/6.3V
C212 1UF/10V
C227 0.1UF/16V c0402
C409 0.1UF/16V c0402
C217 1UF/10V
+1.5VS_MPLL
C247 0.1UF/16V
+1.5VS
L42 10UH
+1.5VS_DPLLA
1.425V~1.575V
Max: 50mA
C248 1UF/10V
C238 10UF/6.3V
C249 0.1UF/16V c0402
L43 10UH
+1.5VS_DPLLB
1.425V~1.575V
Max: 50mA
C252 1UF/10V
C253 10UF/6.3V
C239 0.1UF/16V c0402
L47 120Ohm/100Mhz
+1.5VS_HPLL
1.425V~1.575V
Max: 45mA
C256 1UF/10V
C257 0.1UF/16V c0402
L48 120Ohm/100Mhz
+1.5VS_MPLL
1.425V~1.575V
Max: 45mA
C260 1UF/10V
C261 0.1UF/16V c0402
+2.5VS
C235 0.1UF/16V c0402
C245 0.01UF/16V
C224 1UF/10V
C225 1UF/10V
+1.5VS_DPLLB
+1.5VS_DPLLA
+1.5VS_HPLL
+1.5VS_MPLL
+1.8V
C446 0.1UF/16V c0402
C447 0.1UF/16V c0402
140mA
+2.5VS
C226 10UF/6.3V
C232 0.1UF/16V c0402
C228 0.1UF/16V c0402
+1.5VS_PCIE
+1.5VS_3GPLL
+2.5VS_CRTDAC
+VCCP
C263 1UF/10V
C410 10UF/6.3V
C411 10UF/6.3V
945GMS
POWER
+VCCP
1.25A
+1.5VS
C419 10UF/6.3V
C420 10UF/6.3V
C262 0.1UF/16V c0402
C229 0.1UF/16V
+VCCP
C243 10UF/6.3V
C402 0.1UF/16V c0402
C242 1UF/10V
C259 1UF/10V
C401 1UF/10V
C264 0.1UF/16V c0402
GND
<Variant Name>
Title : NB-945GMS(PWR2)
ASUSTeK COMPUTER INC.
Engineer: Satan He
Size A3
Project Name 1002
Rev 1.3G
Date: Friday, October 03, 2008
Sheet 12 of 50

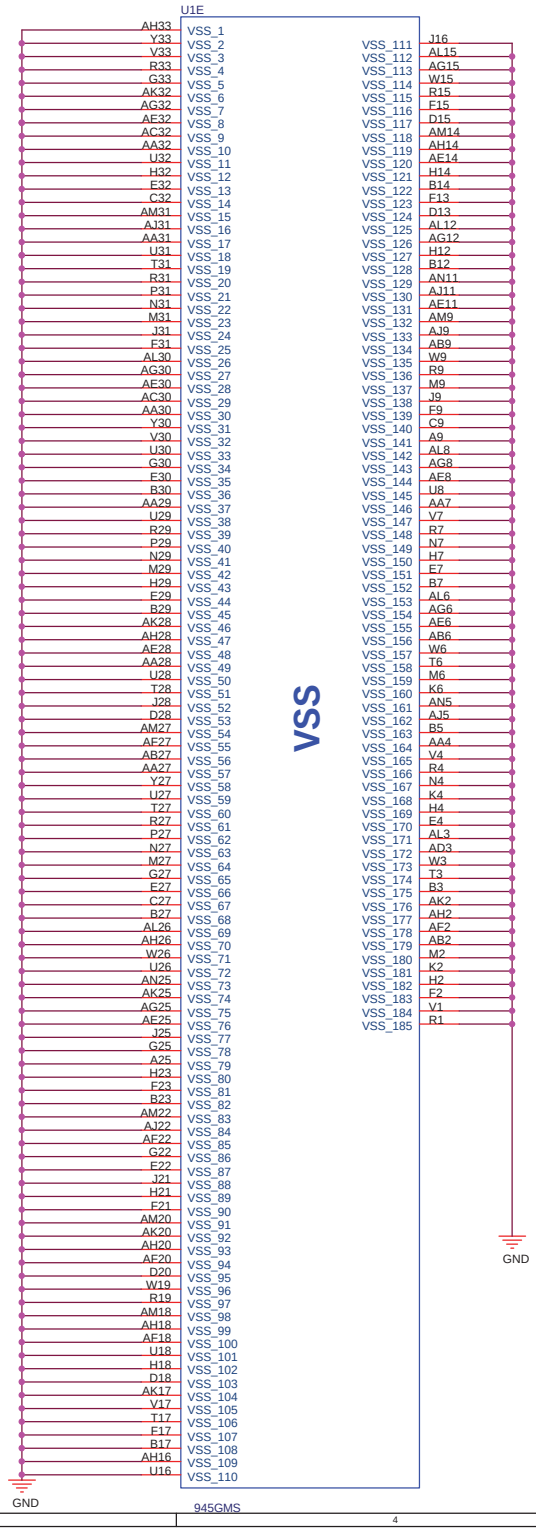

<Variant Name>

ASUSTeK COMPUTER INC.	Title : NB-945PMS(GND)	
	Engineer: Satan_He	
Size: A3	Project Name: 1002	Rev: 1.3G
Date: Friday, October 03, 2008	Sheet 13 of 50	

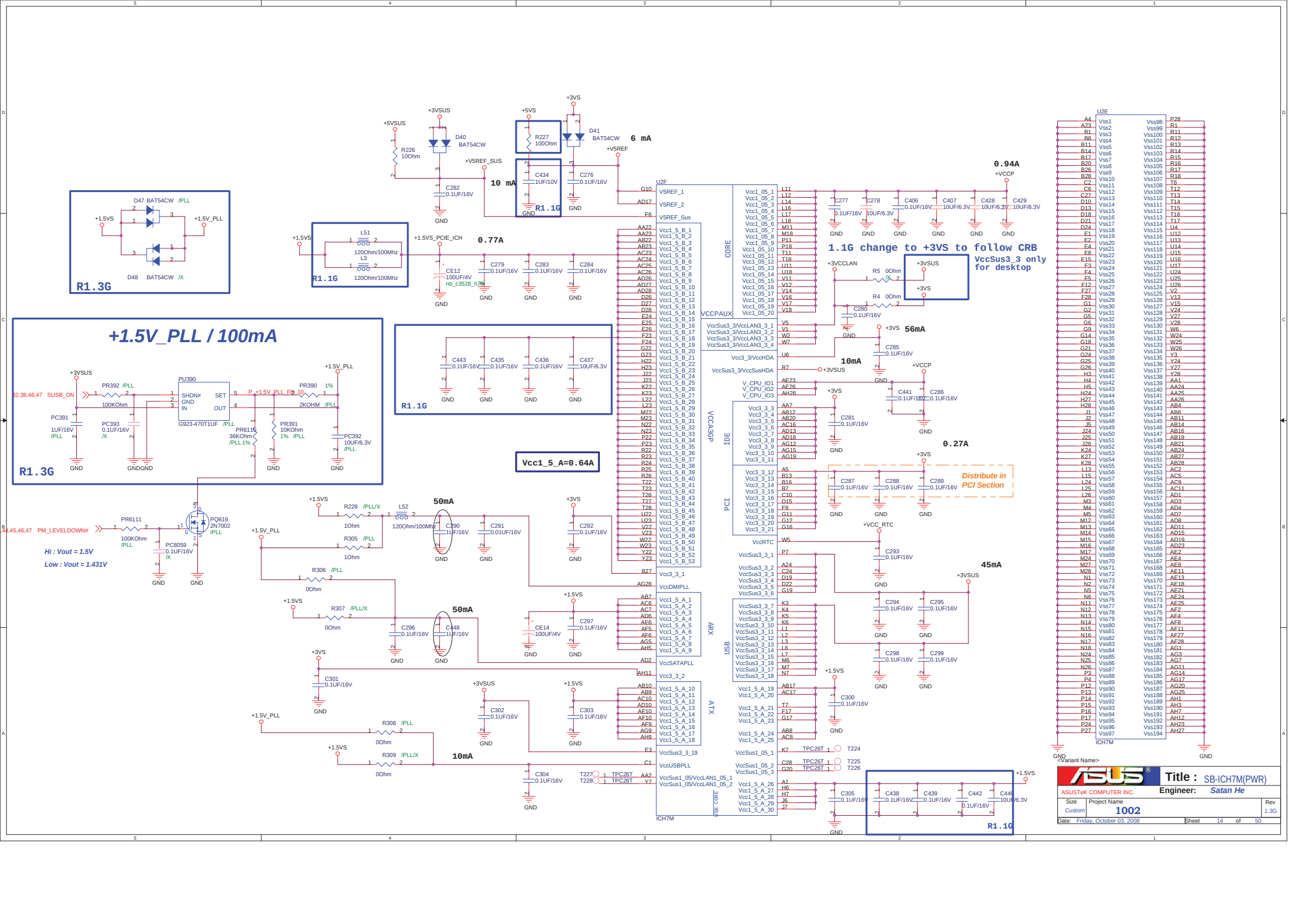
+1.5V_PLL / 100mA
R1.3G
R1.1G
1.1G change to +3VS to follow CRB
VccSus3_3 only for desktop
0.94A
0.77A
6 mA
10 mA
56mA
10mA
0.27A
45mA
50mA
Vcc1_5_A=0.64A
Distribute in PCI Section
Hi : Vout = 1.5V
Low : Vout = 1.431V
U2F
ICH7M
U2E
Title : SB-ICH7M(PWR)
ASUSTeK COMPUTER INC.
Engineer: Satan He
Project Name 1002
Date: Friday, October 03, 2008
Sheet 14 of 50

R1.1G change +3VA net to +3VA_AEC

Change to rechargeable RTC battery

PT71 +VCC_BAT_R +3VA_AEC BAT54WS D42 +RTCBAT BT1 SIDE1 SIDE2 WTOB_CON_2P 12G17100002C R229 1.2KOhm GND

Height：3.4 mm

+3VA_AEC C431 10UF/6.3V C432 0.1UF/16V GND

PT72 +VCC_RTC 0Ohm R1 C307 1UF/10V GND SR9 20KOhm SC8 1UF/16V GND RTCRST# 34,41

RTCRST# RC delay 18~25ms

CLRTC SGL_JUMP Place Near Open Door GND

15PF/50V C306 X2_RTC R230 10MOhm X1_RTC C308 15PF/50V GND X1 SIDE 32.768Khz GND MEC/MS3V-T1R 32.768KHZ 12.5/20

Over Discharge Protection Circuit

+VCC_BAT_R Q61 PMBS3906 +VCC_RTC D45 BAV99W_L D46 BAV99W_L R284 2.2KOhm /X GND

ACZ_SDIN0	CODEC
ACZ_SDIN1	NA

U2A

RTC: X1_RTC AB1 RTCX1; X2_RTC AB2 RTCX2; RTCRST# AA3 RTCRST#; Y5 INTRUDER#; W4 INTVRMEN

R232 1MOhm R233 330KOhm 1% +VCC_RTC R3 0Ohm /X GND

LPC: LAD0 AA6 LPC_AD0 32,34; LAD1 AB5 LPC_AD1 32,34; LAD2 AC4 LPC_AD2 32,34; LAD3 Y6 LPC_AD3 32,34; LDRQ0# AC3 LPC_DRQ#0 T229; LDRQ1#/GPIO23 AA5 LPC_DRQ#1 T230; LFRAME# AB3 LPC_FRAME# 32,34

CPU: A20GATE AE22 A20GATE 32; A20M# AH28 H_A20M# 5; CPUSLP# AG27 S_CPUSLP# T280; TP1/DPRSTP# AE24 PM_DPRSTP# 5,43; TP2/DPSLP# AH25 H_DPSLP# 5; FERR# AG26 H_FERR# 5; GPIO49/CPUPWRGD AG24 H_PWRGD 5; IGNNE# AG22 H_IGNNE# 5; INIT3_3V# AG21 TPC26T T231; INIT# AF22 H_INIT# 5; INTR AF25 H_INTR 5; RCIN# AG23 RC_IN# 32; NMI AH24 H_NMI 5; SMI# AF23 H_SMI# 5; STPCLK# AH22 H_STPCLK# 5; THERMTRIP# AF26 R237 24.9Ohm 1% H_THERMTRIP# 5,8

NO STUFF R107.CPUSLP# ONLY USE IN DESTOP

+VCCP CR235 56Ohm H_FERR# 5

+VCCP R236 56Ohm H_THERMTRIP# 5,8

+3VS R272 10KOhm R136 10KOhm A20GATE RC_IN#

LAN: ACZ_BCLK U1; ACZ_SYNC R6; ACZ_RST# R5; ACZ_SDOUT T4; LAN_RXD0 U5; LAN_RXD1 V4; LAN_RXD2 T5; LAN_TXD0 U7; LAN_TXD1 V6; LAN_TXD2 V7; LAN_CLK V3; LAN_RSTSYNC U3; EE_CS W1; EE_SHCLK Y1; EE_DOUT Y2; EE_DIN W3

AC-97/AZALIA: ACZ_BCLK; ACZ_SYNC; ACZ_RST#; ACZ_SDIN0; ACZ_SDIN1; ACZ_SDIN2; ACZ_SDOUT

AC40 10PF/50V /X GND

30,41 A_Z_BITCLK 39Ohm RN89A ACZ_BCLK

30 A_Z_SYNC 39Ohm RN89B ACZ_SYNC

30 A_Z_RST# 39Ohm RN90A ACZ_RST#

30 A_Z_SDOUT 39Ohm RN90B ACZ_SDOUT

30 A_Z_SDIN0 T281 T232 ACZ_SDIN2

SATA: SATALED# AF18 37 S_SATALED#; SATA0RXN AF3 26 P_SATA_RXN0; SATA0RXP AE3 26 P_SATA_RXP0; SATA0TXN AG2 26 P_SATA_TXN0; SATA0TXP AH2 26 P_SATA_TXP0; SATA2RXN AF7; SATA2RXP AE7; SATA2TXN AG6; SATA2TXP AH6; SATA_CLKN AF1 4 CLK_SATA_ICH#; SATA_CLKP AE1 4 CLK_SATA_ICH; SATARBIASN AH10; SATARBIASP AG10 SATARBIAS# R243 24.9Ohm 1%

IDE: DIOR# AF15 26 IDE_DIOR#; DIOW# AH15 26 IDE_DIOW#; DDACK# AF16 26 IDE_DDACK#; IDEIRQ AH16 26 IDE_IRQ; IORDY AG16 26 IDE_IORDY; DDREQ AE15 26 IDE_DDREQ

DD0 AB15 IDE_DD0; DD1 AE14 IDE_DD1; DD2 AG13 IDE_DD2; DD3 AF13 IDE_DD3; DD4 AD14 IDE_DD4; DD5 AC13 IDE_DD5; DD6 AD12 IDE_DD6; DD7 AC12 IDE_DD7; DD8 AE12 IDE_DD8; DD9 AF12 IDE_DD9; DD10 AB13 IDE_DD10; DD11 AC14 IDE_DD11; DD12 AE14 IDE_DD12; DD13 AH13 IDE_DD13; DD14 AH14 IDE_DD14; DD15 AC15 IDE_DD15 IDE_DD[15:0] 26

DA0 AH17 IDE_DA0; DA1 AE17 IDE_DA1; DA2 AF17 IDE_DA2 IDE_DA[2:0] 26

DCS1# AE16 IDE_DCS#1 26; DCS3# AD16 IDE_DCS#3 26

+3VS R241 4.7KOhm R242 10KOhm

+VCCP R104 330Ohm H_INIT#

ICH7M

<Variant Name>

ASUSTeK COMPUTER INC. Title : SB-ICH7-M(1)

Engineer: Satan He

Size	Project Name	Rev
Custom	1002	1.3G

Date: Friday, October 03, 2008 Sheet 15 of 50

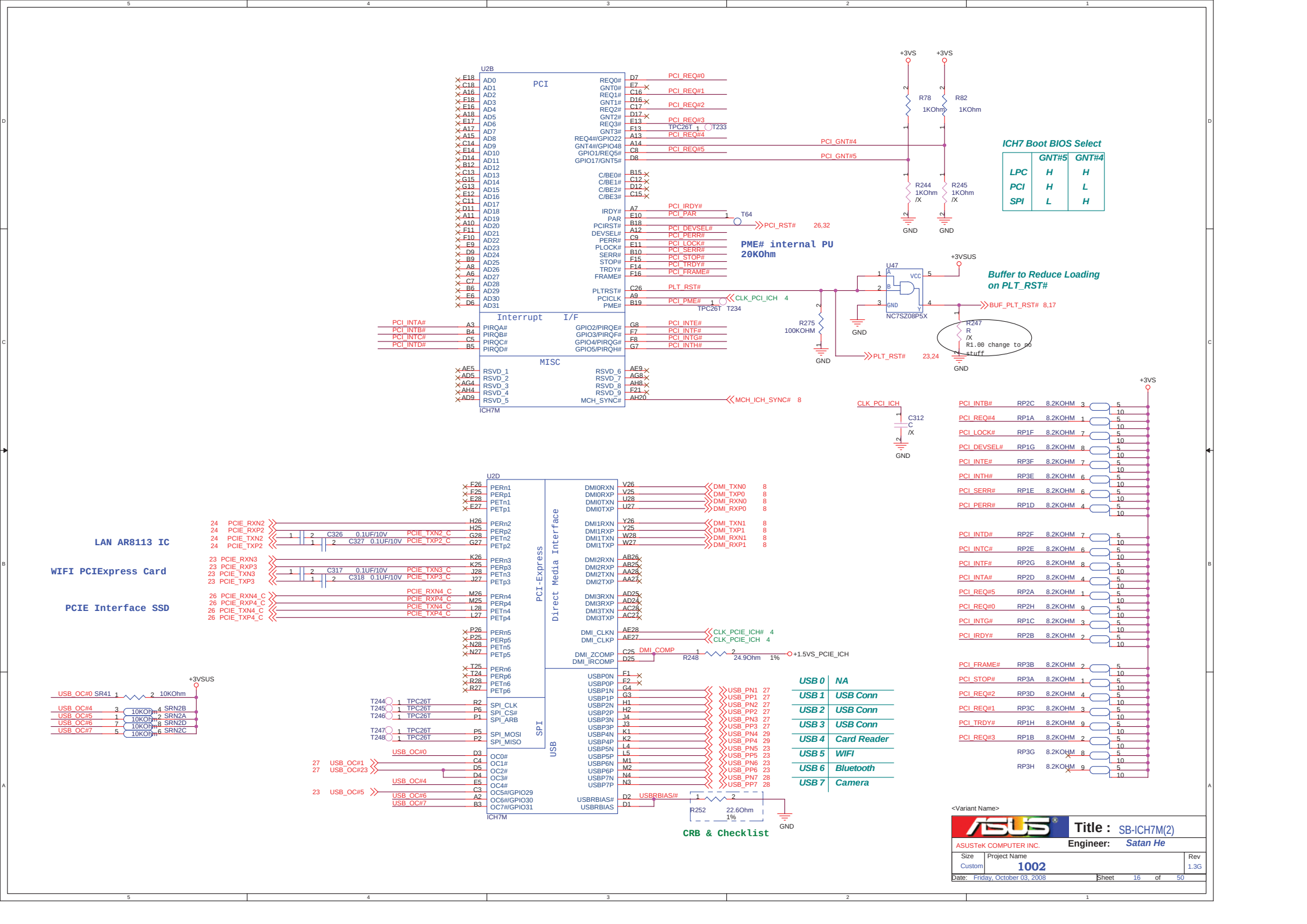
U2B
PCI
Interrupt I/F
MISC
ICH7M
PME# internal PU 20KOhm
ICH7 Boot BIOS Select
GNT#5 GNT#4
LPC H H
PCI H L
SPI L H
Buffer to Reduce Loading on PLT_RST#
NC7SZ08P5X
R247 R /X R1.00 change to no stuff
U2D
PCI-Express
Direct Media Interface
SPI
USB
LAN AR8113 IC
WIFI PCIExpress Card
PCIE Interface SSD
USB 0 NA
USB 1 USB Conn
USB 2 USB Conn
USB 3 USB Conn
USB 4 Card Reader
USB 5 WIFI
USB 6 Bluetooth
USB 7 Camera
CRB & Checklist
Title : SB-ICH7M(2)
ASUSTeK COMPUTER INC.
Engineer: Satan He
Size Custom
Project Name 1002
Rev 1.3G
Date: Friday, October 03, 2008
Sheet 16 of 50

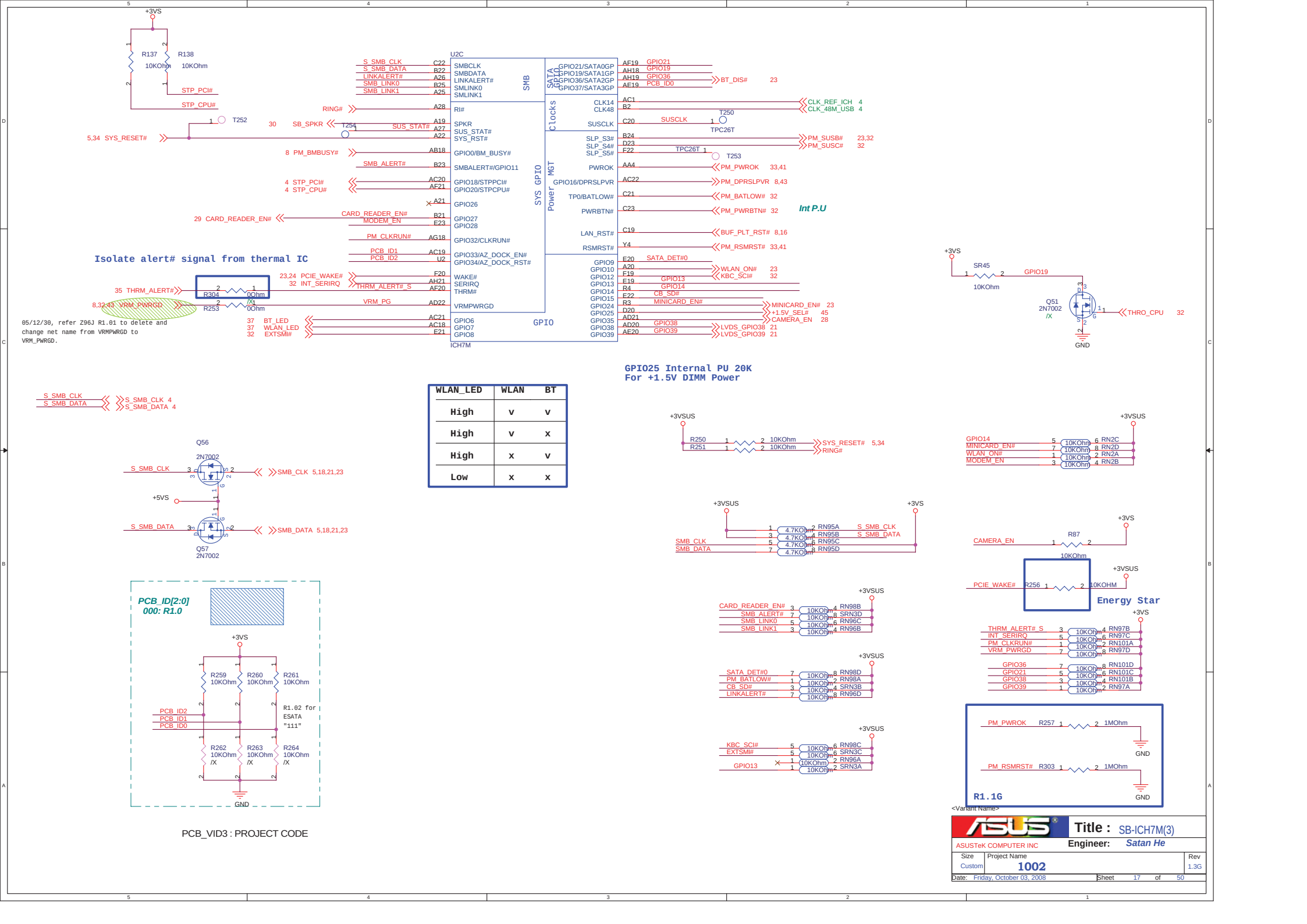
+3VS
R137 10KOhm
R138 10KOhm
STP_PCI#
STP_CPU#
U2C
SMBCLK
SMBDATA
LINKALERT#
SMLINK0
SMLINK1
SMB
S_SMB_CLK C22
S_SMB_DATA B22
LINKALERT# A26
SMB_LINK0 B25
SMB_LINK1 A25
RING# A28
RI#
SPKR A19
SUS_STAT# A27
SYS_RST# A22
SB_SPKR 30
T252
T254
5,34 SYS_RESET#
8 PM_BMBUSY# AB18
GPIO0/BM_BUSY#
SMB_ALERT# B23
SMBALERT#/GPIO11
4 STP_PCI# AC20
4 STP_CPU# AF21
GPIO18/STPPCI#
GPIO20/STPCPU#
A21
GPIO26
29 CARD_READER_EN# B21
MODEM_EN F23
GPIO27
GPIO28
PM_CLKRUN# AG18
GPIO32/CLKRUN#
PCB_ID1 AC19
PCB_ID2 U2
GPIO33/AZ_DOCK_EN#
GPIO34/AZ_DOCK_RST#
23,24 PCIE_WAKE# F20
32 INT_SERIRQ AH21
THRM_ALERT#_S AF20
WAKE#
SERIRQ
THRM#
35 THRM_ALERT#
R304 0Ohm /X1
8,32,43 VRM_PWRGD
R253 0Ohm
VRM_PG AD22
VRMPWRGD
37 BT_LED AC21
37 WLAN_LED AC18
32 EXTSMI# E21
GPIO6
GPIO7
GPIO8
GPIO
ICH7M
SATA GPIO
GPIO21/SATA0GP AF19 GPIO21
GPIO19/SATA1GP AH18 GPIO19
GPIO36/SATA2GP AH19 GPIO36
GPIO37/SATA3GP AE19 PCB_ID0
BT_DIS# 23
Clocks
CLK14 AC1
CLK48 B2
CLK_REF_ICH 4
CLK_48M_USB 4
SUSCLK C20
SUSCLK
T250
TPC26T
SYS GPIO
Power MGT
SLP_S3# B24
SLP_S4# D23
SLP_S5# F22
PM_SUSB# 23,32
PM_SUSC# 32
TPC26T
T253
PWROK AA4
PM_PWROK 33,41
GPIO16/DPRSLPVR AC22
PM_DPRSLPVR 8,43
TP0/BATLOW# C21
PM_BATLOW# 32
PWRBTN# C23
PM_PWRBTN# 32
Int P.U
LAN_RST# C19
BUF_PLT_RST# 8,16
RSMRST# Y4
PM_RSMRST# 33,41
GPIO9 E20 SATA_DET#0
GPIO10 A20 WLAN_ON# 23
GPIO12 F19 KBC_SCI# 32
GPIO13 E19 GPIO13
GPIO14 R4 GPIO14
GPIO15 E22 CB_SD#
GPIO24 R3 MINICARD_EN#
GPIO25 D20 MINICARD_EN# 23
GPIO35 AD21 +1.5V_SEL# 45
GPIO38 AD20 GPIO38 CAMERA_EN 28
GPIO39 AE20 GPIO39
LVDS_GPIO38 21
LVDS_GPIO39 21
Isolate alert# signal from thermal IC
05/12/30, refer Z96J R1.01 to delete and change net name from VRMPWRGD to VRM_PWRGD.
+3VS
SR45 10KOhm
GPIO19
Q51 2N7002 /X
THRO_CPU 32
GND
GPIO25 Internal PU 20K
For +1.5V DIMM Power
WLAN_LED | WLAN | BT
High | v | v
High | v | x
High | x | v
Low | x | x
S_SMB_CLK
S_SMB_DATA
S_SMB_CLK 4
S_SMB_DATA 4
Q56 2N7002
S_SMB_CLK
SMB_CLK 5,18,21,23
+5VS
S_SMB_DATA
SMB_DATA 5,18,21,23
Q57 2N7002
+3VSUS
R250 10KOhm
R251 10KOhm
SYS_RESET# 5,34
RING#
GPIO14
MINICARD_EN#
WLAN_ON#
MODEM_EN
RN2C RN2D RN2A RN2B
SMB_CLK
SMB_DATA
4.7KOhm RN95A RN95B RN95C RN95D
S_SMB_CLK
S_SMB_DATA
CAMERA_EN
R87 10KOhm
PCIE_WAKE#
R256 10KOHM
Energy Star
CARD_READER_EN#
SMB_ALERT#
SMB_LINK0
SMB_LINK1
RN98B RN3D RN96C RN96B
SATA_DET#0
PM_BATLOW#
CB_SD#
LINKALERT#
RN98D RN98A SRN3B RN96D
KBC_SCI#
EXTSMI#
GPIO13
RN98C SRN3C RN96A SRN3A
THRM_ALERT# S
INT_SERIRQ
PM_CLKRUN#
VRM_PWRGD
RN97B RN97C RN101A RN97D
GPIO36
GPIO21
GPIO38
GPIO39
RN101D RN101C RN101B RN97A
PM_PWROK R257 1MOhm
PM_RSMRST# R303 1MOhm
R1.1G
PCB_ID[2:0]
000: R1.0
R259 10KOhm
R260 10KOhm
R261 10KOhm
R262 10KOhm /X
R263 10KOhm /X
R264 10KOhm /X
PCB_ID2
PCB_ID1
PCB_ID0
R1.02 for ESATA "111"
PCB_VID3 : PROJECT CODE
<Variant Name>
Title : SB-ICH7M(3)
ASUSTeK COMPUTER INC
Engineer: Satan He
Size Custom
Project Name 1002
Rev 1.3G
Date: Friday, October 03, 2008
Sheet 17 of 50

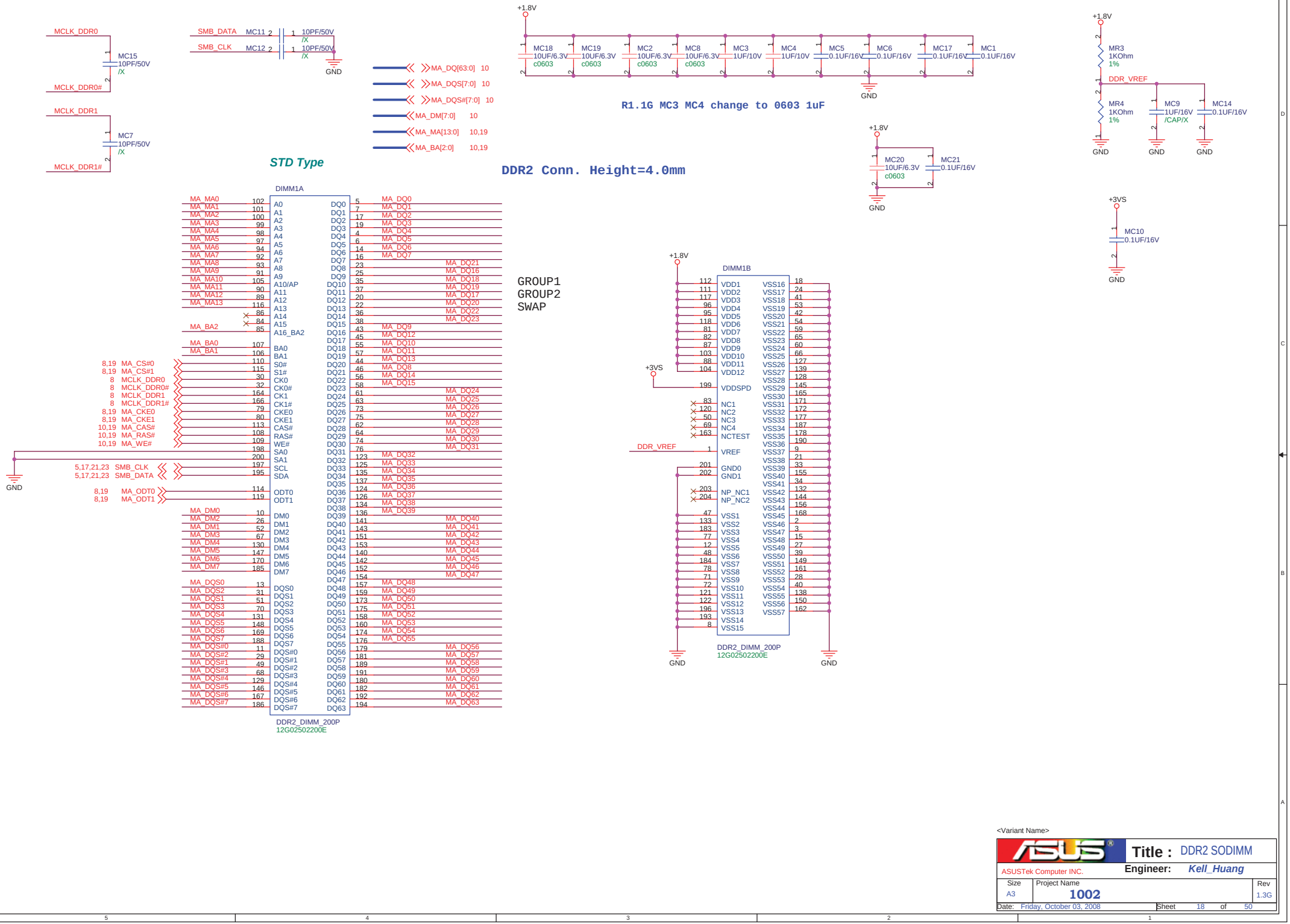
MCLK_DDR0
MC15
10PF/50V
/X
MCLK_DDR0#
MCLK_DDR1
MC7
10PF/50V
/X
MCLK_DDR1#
SMB_DATA
SMB_CLK
MC11
MC12
10PF/50V
/X
GND
MA_DQ[63:0] 10
MA_DQS[7:0] 10
MA_DQS#[7:0] 10
MA_DM[7:0] 10
MA_MA[13:0] 10,19
MA_BA[2:0] 10,19
+1.8V
MC18 10UF/6.3V c0603
MC19 10UF/6.3V c0603
MC2 10UF/6.3V c0603
MC8 10UF/6.3V c0603
MC3 1UF/10V
MC4 1UF/10V
MC5 0.1UF/16V
MC6 0.1UF/16V
MC17 0.1UF/16V
MC1 0.1UF/16V
R1.1G MC3 MC4 change to 0603 1uF
+1.8V
MR3 1KOhm 1%
DDR_VREF
MR4 1KOhm 1%
MC9 1UF/16V /CAP/X
MC14 0.1UF/16V
GND
GND
GND
+1.8V
MC20 10UF/6.3V c0603
MC21 0.1UF/16V
GND
+3VS
MC10 0.1UF/16V
GND
STD Type
DDR2 Conn. Height=4.0mm
DIMM1A
MA_MA0 MA_MA1 MA_MA2 MA_MA3 MA_MA4 MA_MA5 MA_MA6 MA_MA7 MA_MA8 MA_MA9 MA_MA10 MA_MA11 MA_MA12 MA_MA13
MA_BA2
MA_BA0 MA_BA1
8,19 MA_CS#0
8,19 MA_CS#1
8 MCLK_DDR0
8 MCLK_DDR0#
8 MCLK_DDR1
8 MCLK_DDR1#
8,19 MA_CKE0
8,19 MA_CKE1
10,19 MA_CAS#
10,19 MA_RAS#
10,19 MA_WE#
GND
5,17,21,23 SMB_CLK
5,17,21,23 SMB_DATA
8,19 MA_ODT0
8,19 MA_ODT1
MA_DM0 MA_DM2 MA_DM1 MA_DM3 MA_DM4 MA_DM5 MA_DM6 MA_DM7
MA_DQS0 MA_DQS2 MA_DQS1 MA_DQS3 MA_DQS4 MA_DQS5 MA_DQS6 MA_DQS7 MA_DQS#0 MA_DQS#2 MA_DQS#1 MA_DQS#3 MA_DQS#4 MA_DQS#5 MA_DQS#6 MA_DQS#7
A0 A1 A2 A3 A4 A5 A6 A7 A8 A9 A10/AP A11 A12 A13 A14 A15 A16_BA2 BA0 BA1 S0# S1# CK0 CK0# CK1 CK1# CKE0 CKE1 CAS# RAS# WE# SA0 SA1 SCL SDA ODT0 ODT1 DM0 DM1 DM2 DM3 DM4 DM5 DM6 DM7 DQS0 DQS1 DQS2 DQS3 DQS4 DQS5 DQS6 DQS7 DQS#0 DQS#1 DQS#2 DQS#3 DQS#4 DQS#5 DQS#6 DQS#7
DQ0 DQ1 DQ2 DQ3 DQ4 DQ5 DQ6 DQ7 DQ8 DQ9 DQ10 DQ11 DQ12 DQ13 DQ14 DQ15 DQ16 DQ17 DQ18 DQ19 DQ20 DQ21 DQ22 DQ23 DQ24 DQ25 DQ26 DQ27 DQ28 DQ29 DQ30 DQ31 DQ32 DQ33 DQ34 DQ35 DQ36 DQ37 DQ38 DQ39 DQ40 DQ41 DQ42 DQ43 DQ44 DQ45 DQ46 DQ47 DQ48 DQ49 DQ50 DQ51 DQ52 DQ53 DQ54 DQ55 DQ56 DQ57 DQ58 DQ59 DQ60 DQ61 DQ62 DQ63
MA_DQ0 MA_DQ1 MA_DQ2 MA_DQ3 MA_DQ4 MA_DQ5 MA_DQ6 MA_DQ7 MA_DQ21 MA_DQ16 MA_DQ18 MA_DQ19 MA_DQ17 MA_DQ20 MA_DQ22 MA_DQ23 MA_DQ9 MA_DQ12 MA_DQ10 MA_DQ11 MA_DQ13 MA_DQ8 MA_DQ14 MA_DQ15 MA_DQ24 MA_DQ25 MA_DQ26 MA_DQ27 MA_DQ28 MA_DQ29 MA_DQ30 MA_DQ31 MA_DQ32 MA_DQ33 MA_DQ34 MA_DQ35 MA_DQ36 MA_DQ37 MA_DQ38 MA_DQ39 MA_DQ40 MA_DQ41 MA_DQ42 MA_DQ43 MA_DQ44 MA_DQ45 MA_DQ46 MA_DQ47 MA_DQ48 MA_DQ49 MA_DQ50 MA_DQ51 MA_DQ52 MA_DQ53 MA_DQ54 MA_DQ55 MA_DQ56 MA_DQ57 MA_DQ58 MA_DQ59 MA_DQ60 MA_DQ61 MA_DQ62 MA_DQ63
DDR2_DIMM_200P
12G02502200E
GROUP1
GROUP2
SWAP
+1.8V
DIMM1B
+3VS
DDR_VREF
VDD1 VDD2 VDD3 VDD4 VDD5 VDD6 VDD7 VDD8 VDD9 VDD10 VDD11 VDD12 VDDSPD NC1 NC2 NC3 NC4 NCTEST VREF GND0 GND1 NP_NC1 NP_NC2 VSS1 VSS2 VSS3 VSS4 VSS5 VSS6 VSS7 VSS8 VSS9 VSS10 VSS11 VSS12 VSS13 VSS14 VSS15 VSS16 VSS17 VSS18 VSS19 VSS20 VSS21 VSS22 VSS23 VSS24 VSS25 VSS26 VSS27 VSS28 VSS29 VSS30 VSS31 VSS32 VSS33 VSS34 VSS35 VSS36 VSS37 VSS38 VSS39 VSS40 VSS41 VSS42 VSS43 VSS44 VSS45 VSS46 VSS47 VSS48 VSS49 VSS50 VSS51 VSS52 VSS53 VSS54 VSS55 VSS56 VSS57
DDR2_DIMM_200P
12G02502200E
GND
GND
<Variant Name>
Title : DDR2 SODIMM
ASUSTek Computer INC.
Engineer: Kell_Huang
Size A3
Project Name 1002
Rev 1.3G
Date: Friday, October 03, 2008
Sheet 18 of 50

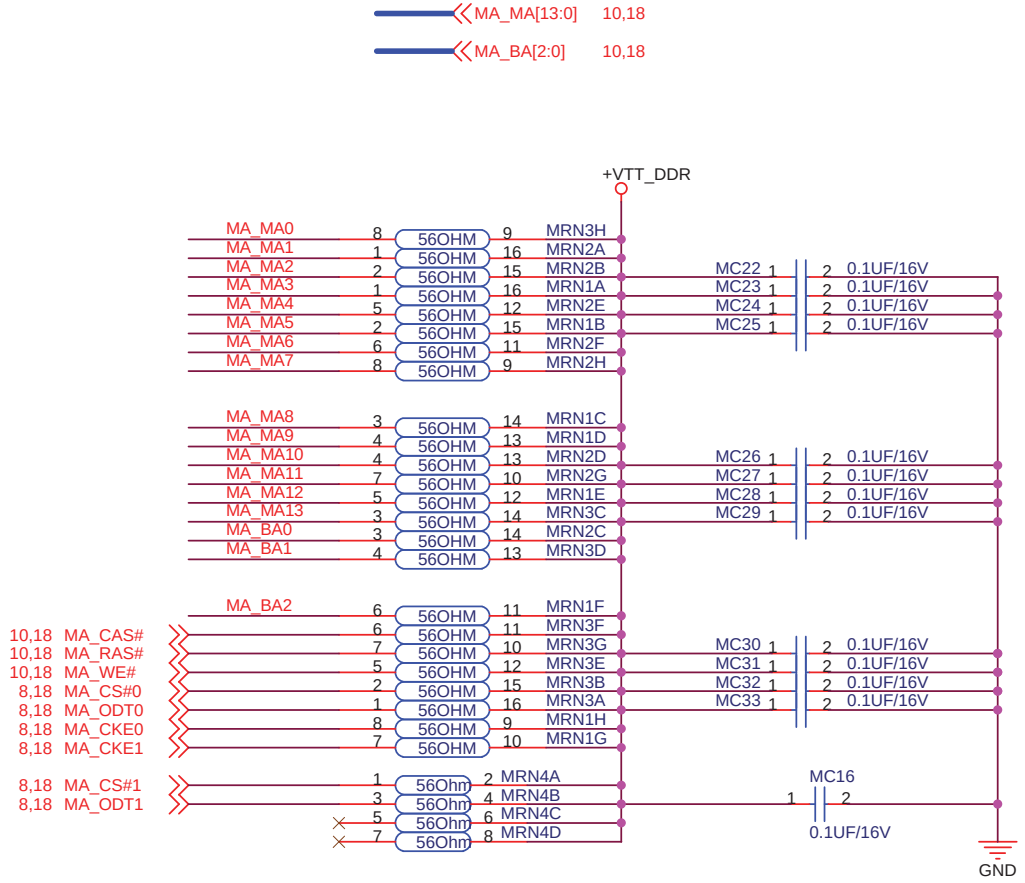

<Variant Name>

ASUSTek Computer INC.	Title : DDR2_Termination	
	Engineer: Kell_Huang	
Size: A4	Project Name: 1002	Rev: 1.3G
Date: Friday, October 03, 2008	Sheet 19 of 50	

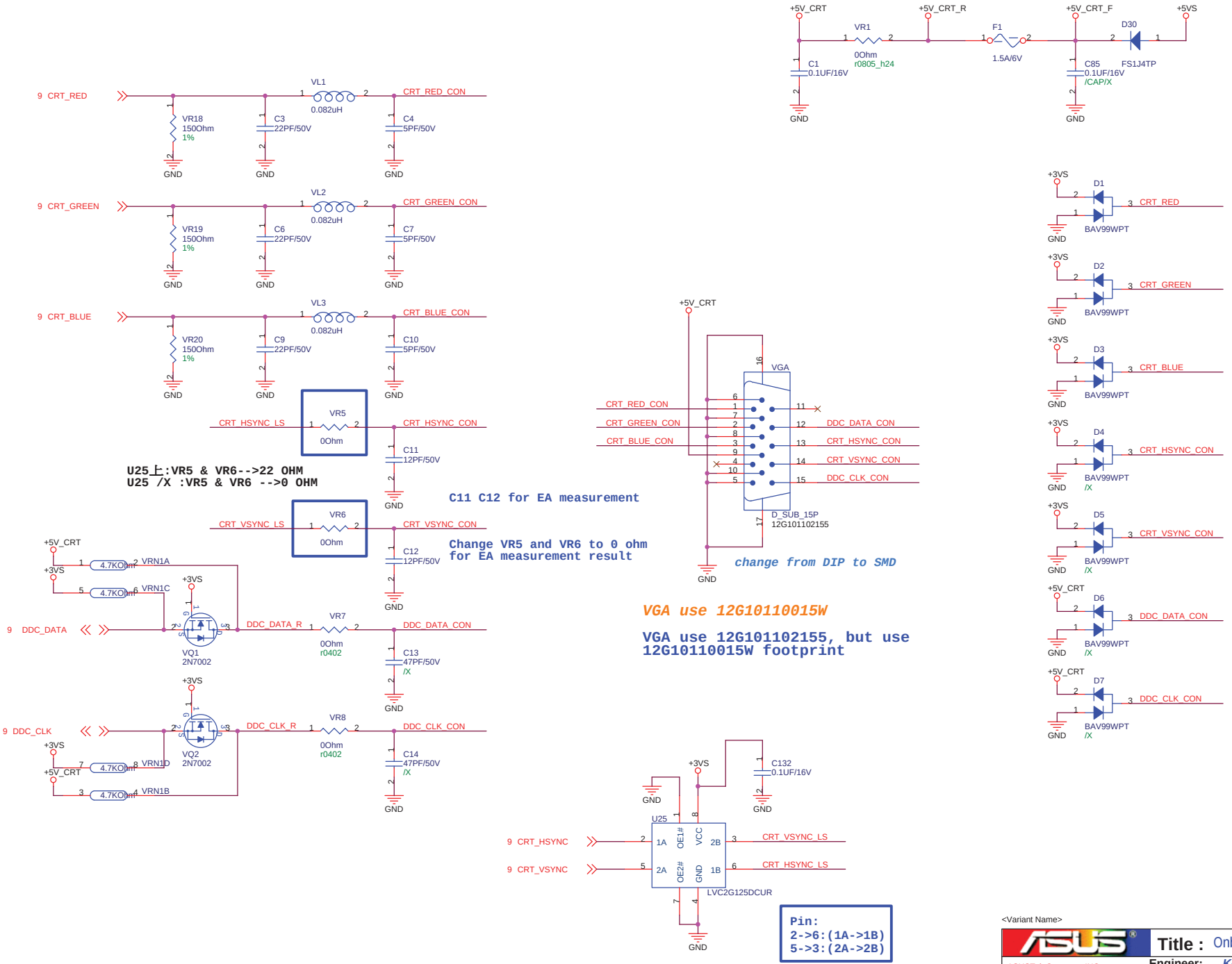

<Variant Name>

ASUSTek Computer INC.	Title : Onboard VGA	
	Engineer: Kell_Huang	
Size: A3	Project Name: 1002	Rev: 1.3G
Date: Friday, October 03, 2008	Sheet 20 of 50	

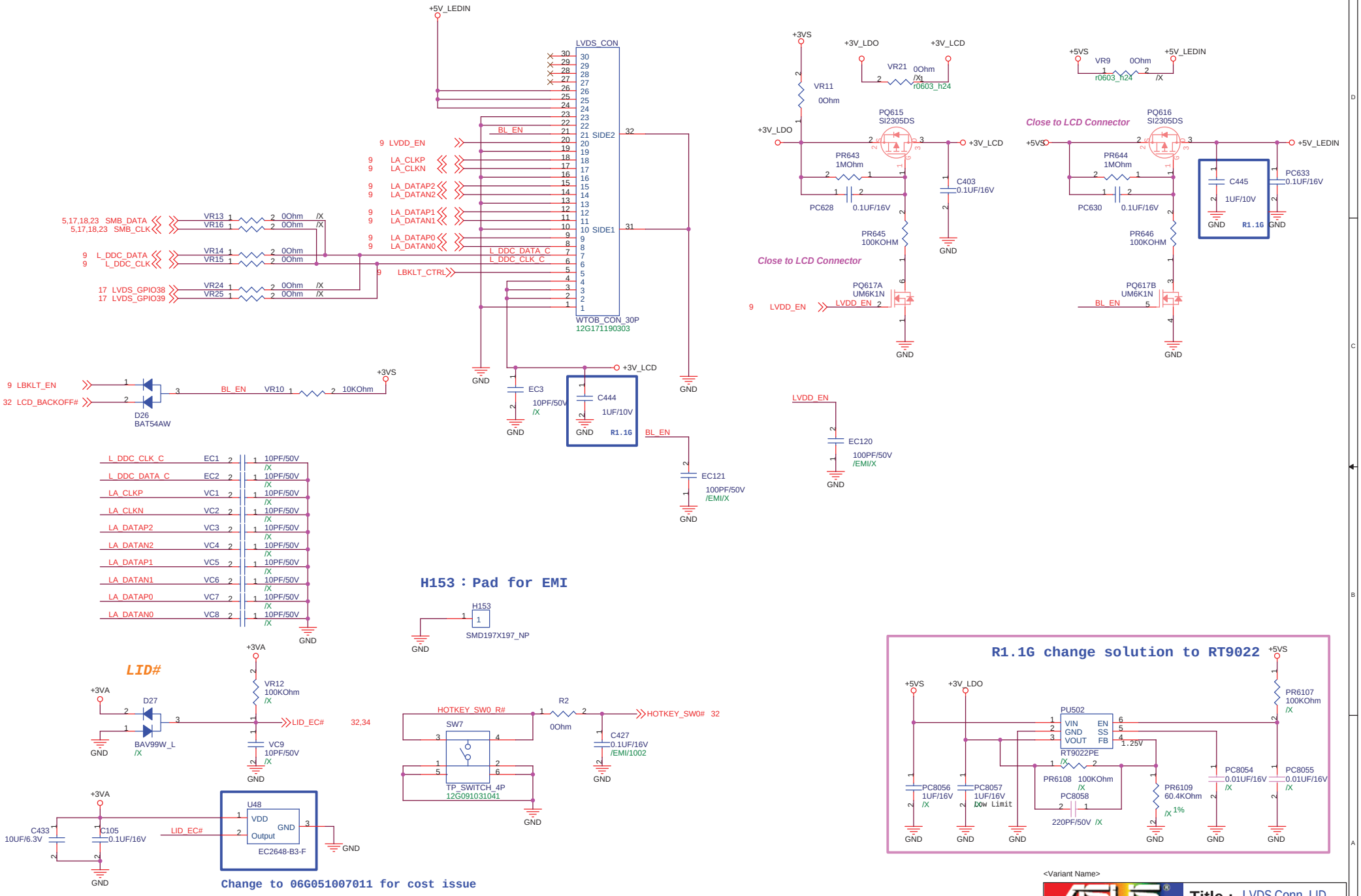

<Variant Name>

ASUSTek Computer INC.	Title : LVDS Conn_LID	
	Engineer: Kell_Huang	
Size: A3	Project Name: 1002	Rev: 1.3G
Date: Friday, October 03, 2008	Sheet 21 of 50	

<Variant Name>

ASUSTek Computer INC.	Title : Blank	
	Engineer: *Kell_Huang*	
Size: A3	Project Name: 1002	Rev: 1.3G
Date: Friday, October 03, 2008	Sheet 22 of 50	

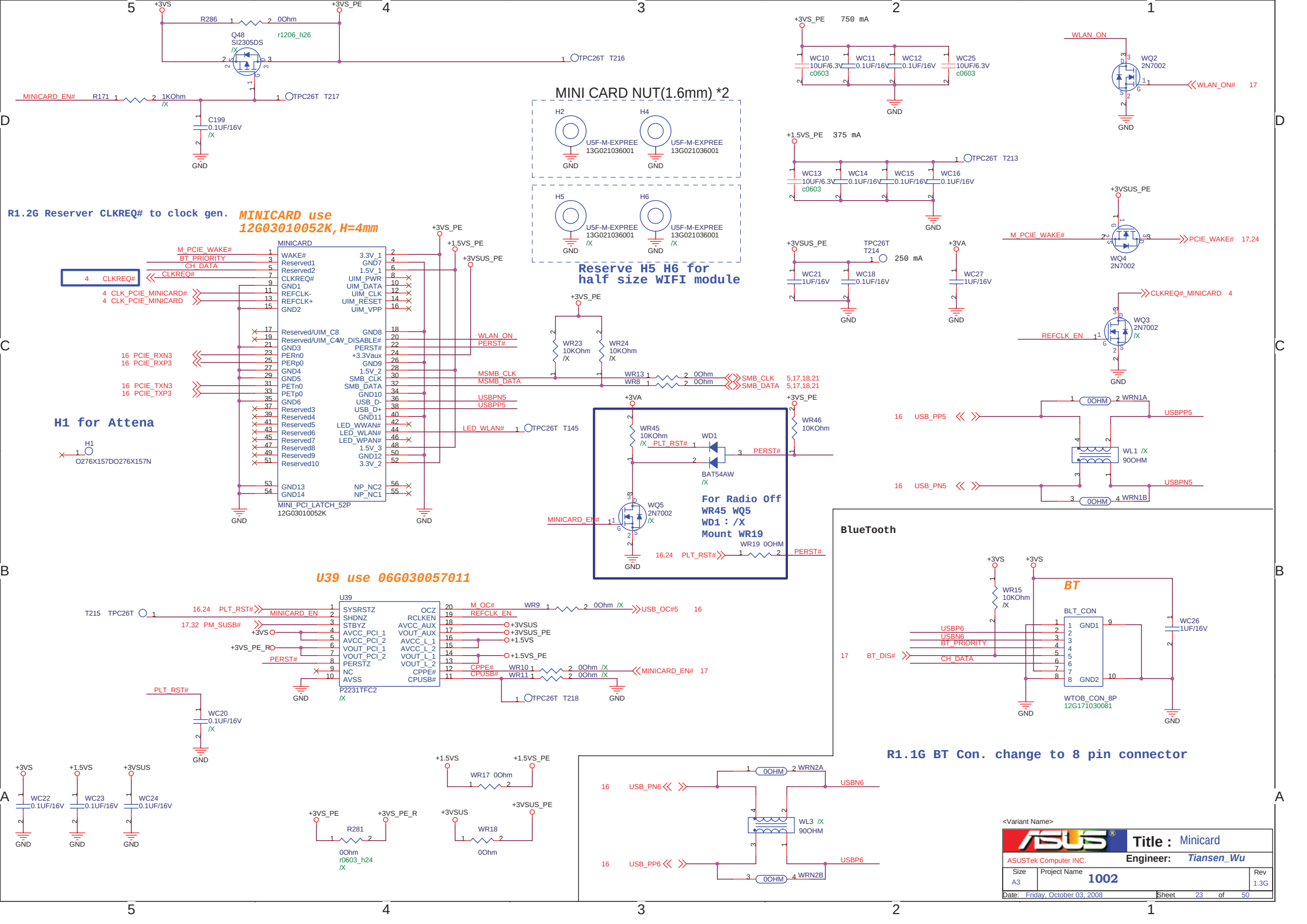
R1.2G Reserver CLKREQ# to clock gen.
MINICARD use 12G03010052K,H=4mm
MINI CARD NUT(1.6mm) *2
Reserve H5 H6 for half size WIFI module
H1 for Attena
U39 use 06G030057011
For Radio Off
WR45 WQ5
WD1 : /X
Mount WR19
BlueTooth
BT
R1.1G BT Con. change to 8 pin connector
MINICARD
MINI_PCI_LATCH_52P
12G03010052K
P2231TFC2
WTOB_CON_8P
12G171030081
Title : Minicard
ASUSTek Computer INC.
Engineer: Tiansen_Wu
Project Name 1002
Size A3
Rev 1.3G
Date: Friday, October 03, 2008
Sheet 23 of 50

0.1A Beta

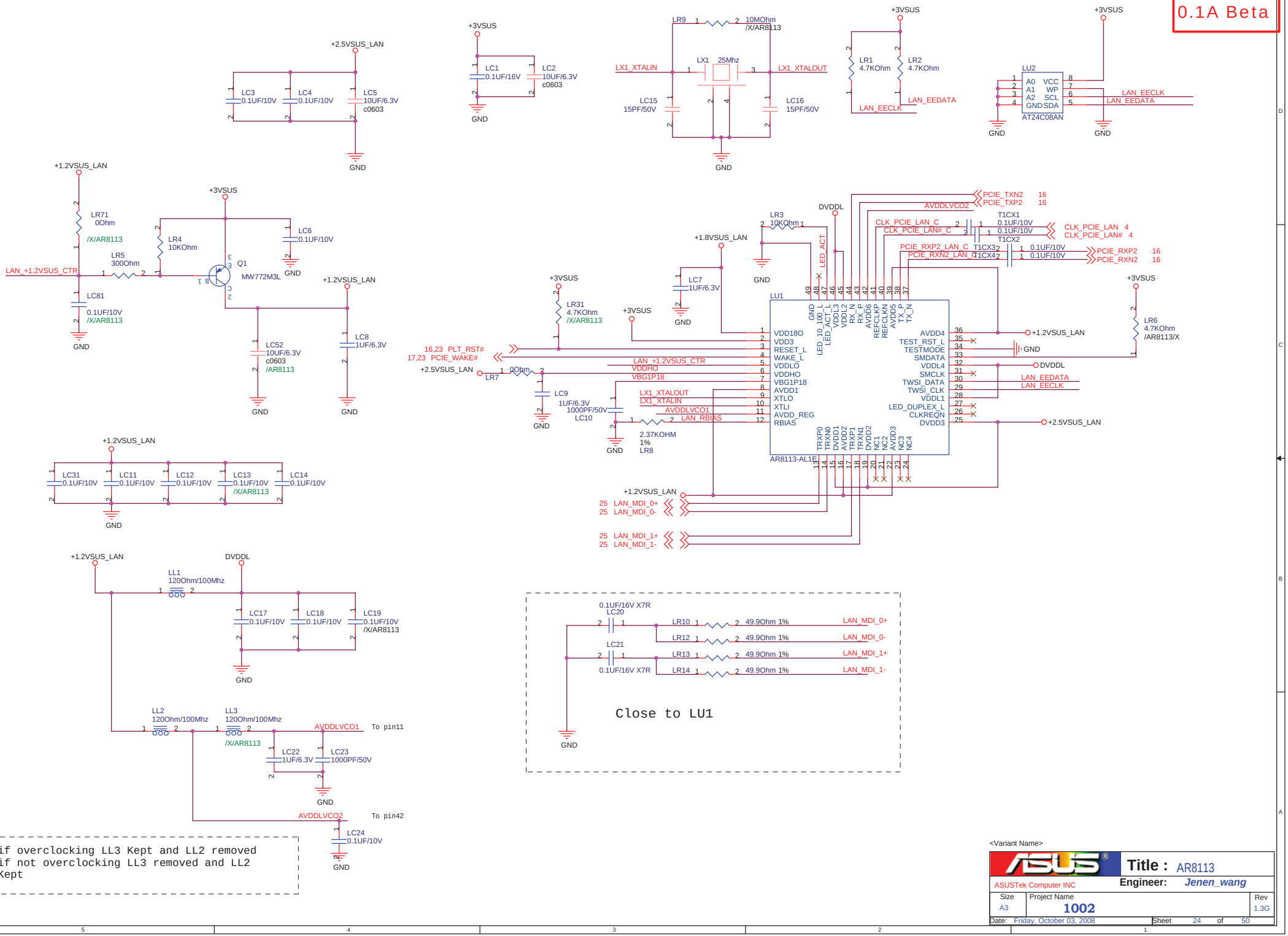

<Variant Name>

ASUSTek Computer INC

Title : AR8113

Engineer: Jenen_wang

Size	Project Name	Rev
A3	1002	1.3G

Date: Friday, October 03, 2008 Sheet 24 of 50

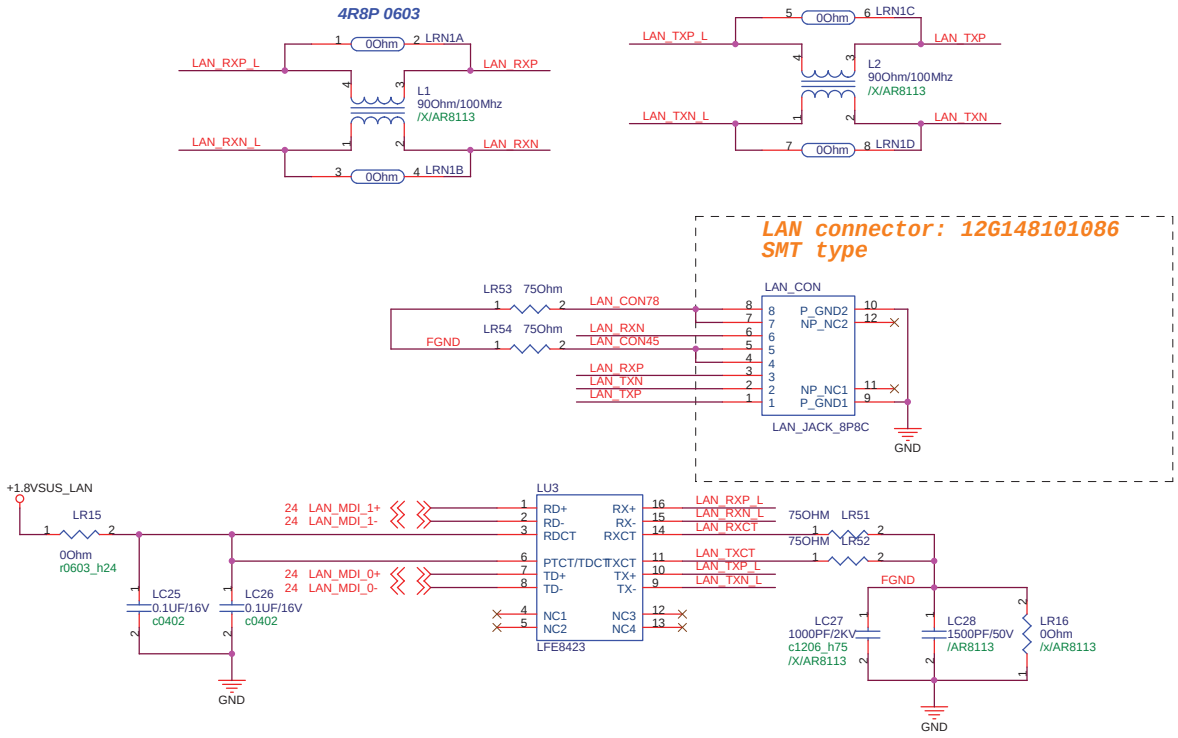

<Variant Name>

ASUSTek Computer INC.	Title : RJ45	
	Engineer: Kell_Huang	
Size: A3	Project Name: 1002	Rev: 1.3G
Date: Friday, October 03, 2008	Sheet 25 of 50	

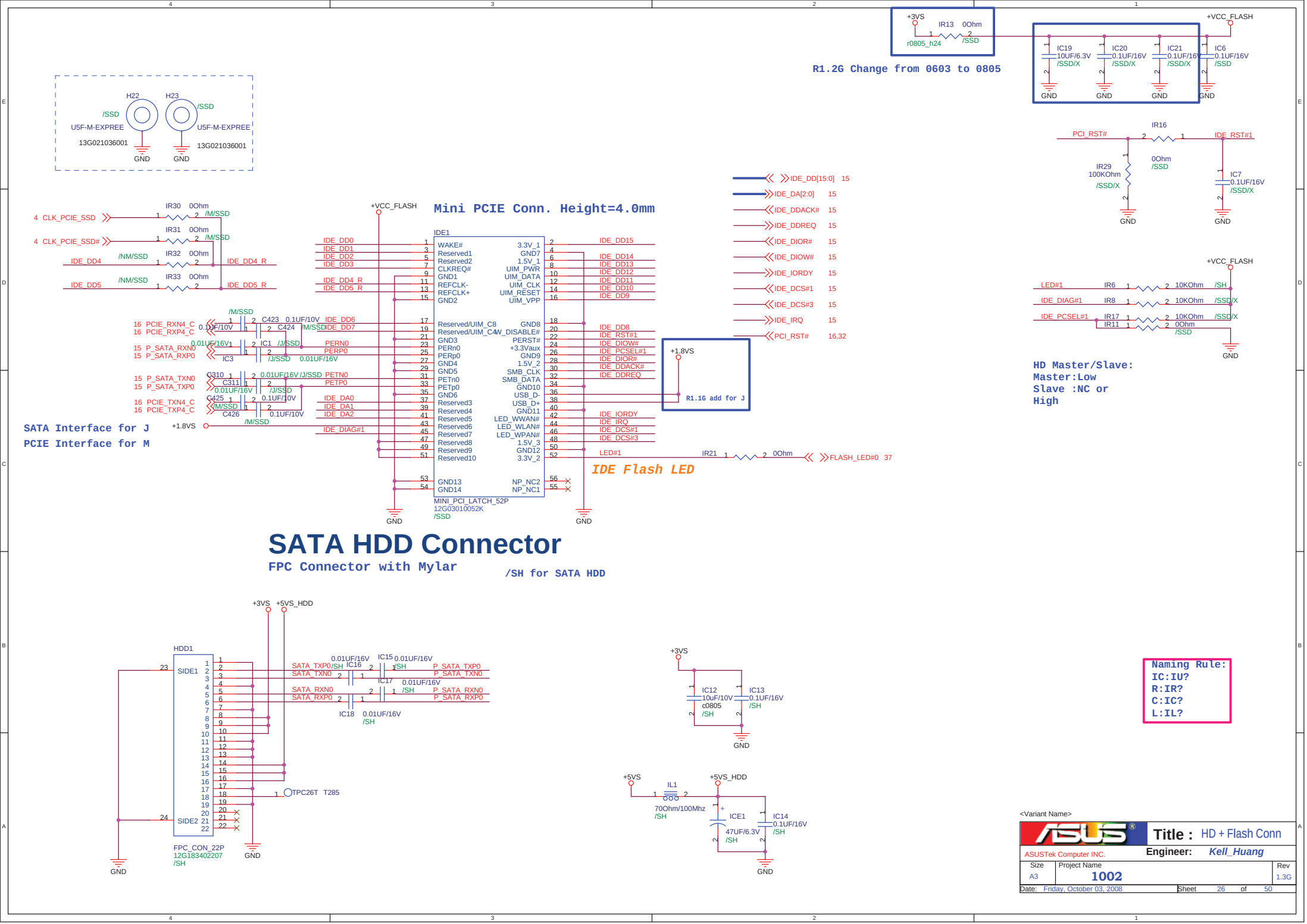
+3VS
IR13 0Ohm
r0805_h24
/SSD
R1.2G Change from 0603 to 0805
+VCC_FLASH
IC19 10UF/6.3V /SSD/X
IC20 0.1UF/16V /SSD/X
IC21 0.1UF/16V /SSD/X
IC6 0.1UF/16V /SSD
GND
H22
H23
/SSD
U5F-M-EXPREE
13G021036001
PCI_RST#
IR16
IR29 100KOhm /SSD/X
0Ohm /SSD
IC7 0.1UF/16V /SSD/X
IDE_RST#1
Mini PCIE Conn. Height=4.0mm
IDE1
WAKE#
Reserved1
Reserved2
CLKREQ#
GND1
REFCLK-
REFCLK+
GND2
3.3V_1
GND7
1.5V_1
UIM_PWR
UIM_DATA
UIM_CLK
UIM_RESET
UIM_VPP
Reserved/UIM_C8
Reserved/UIM_C4
GND3
PERn0
PERp0
GND4
GND5
PETn0
PETp0
GND6
Reserved3
Reserved4
Reserved5
Reserved6
Reserved7
Reserved8
Reserved9
Reserved10
GND8
W_DISABLE#
PERST#
+3.3Vaux
GND9
1.5V_2
SMB_CLK
SMB_DATA
GND10
USB_D-
USB_D+
GND11
LED_WWAN#
LED_WLAN#
LED_WPAN#
1.5V_3
GND12
3.3V_2
GND13
GND14
NP_NC2
NP_NC1
MINI_PCI_LATCH_52P
12G03010052K
/SSD
IDE_DD[15:0] 15
IDE_DA[2:0] 15
IDE_DDACK# 15
IDE_DDREQ 15
IDE_DIOR# 15
IDE_DIOW# 15
IDE_IORDY 15
IDE_DCS#1 15
IDE_DCS#3 15
IDE_IRQ 15
PCI_RST# 16,32
+1.8VS
R1.1G add for J
IR30 0Ohm /M/SSD
IR31 0Ohm /M/SSD
IR32 0Ohm /NM/SSD
IR33 0Ohm /NM/SSD
CLK_PCIE_SSD
CLK_PCIE_SSD#
IDE_DD4
IDE_DD5
IDE_DD4_R
IDE_DD5_R
C423 0.1UF/10V
C424 0.01UF/16V
IC1 /J/SSD
IC3 /J/SSD 0.01UF/16V
C310 0.01UF/16V /J/SSD
C311 0.01UF/16V /J/SSD
C425 0.1UF/10V
C426 0.1UF/10V
PCIE_RXN4_C
PCIE_RXP4_C
P_SATA_RXN0
P_SATA_RXP0
P_SATA_TXN0
P_SATA_TXP0
PCIE_TXN4_C
PCIE_TXP4_C
PERN0
PERP0
PETN0
PETP0
IDE_DA0
IDE_DA1
IDE_DA2
IDE_DIAG#1
IDE_DD0
IDE_DD1
IDE_DD2
IDE_DD3
IDE_DD6
IDE_DD7
IDE_DD15
IDE_DD14
IDE_DD13
IDE_DD12
IDE_DD11
IDE_DD10
IDE_DD9
IDE_DD8
IDE_RST#1
IDE_DIOW#
IDE_PCSEL#1
IDE_DIOR#
IDE_DDACK#
IDE_DDREQ
IDE_IORDY
IDE_IRQ
IDE_DCS#1
IDE_DCS#3
LED#1
IR21 0Ohm
FLASH_LED#0 37
IDE Flash LED
SATA Interface for J
PCIE Interface for M
+VCC_FLASH
LED#1 IR6 10KOhm /SH
IDE_DIAG#1 IR8 10KOhm /SSD/X
IDE_PCSEL#1 IR17 10KOhm /SSD/X
IR11 0Ohm /SSD
HD Master/Slave:
Master:Low
Slave :NC or
High
SATA HDD Connector
FPC Connector with Mylar
/SH for SATA HDD
+3VS
+5VS_HDD
HDD1
SIDE1
SIDE2
SATA_TXP0
SATA_TXN0
SATA_RXN0
SATA_RXP0
P_SATA_TXP0
P_SATA_TXN0
P_SATA_RXN0
P_SATA_RXP0
IC15 0.01UF/16V /SH
IC16 0.01UF/16V /SH
IC17 0.01UF/16V /SH
IC18 0.01UF/16V /SH
TPC26T T285
FPC_CON_22P
12G183402207
/SH
IC12 10uF/10V c0805 /SH
IC13 0.1UF/16V /SH
IL1 70Ohm/100Mhz /SH
ICE1 47UF/6.3V /SH
IC14 0.1UF/16V /SH
Naming Rule:
IC:IU?
R:IR?
C:IC?
L:IL?
<Variant Name>
Title : HD + Flash Conn
ASUSTek Computer INC.
Engineer: Kell_Huang
Size A3
Project Name 1002
Rev 1.3G
Date: Friday, October 03, 2008
Sheet 26 of 50

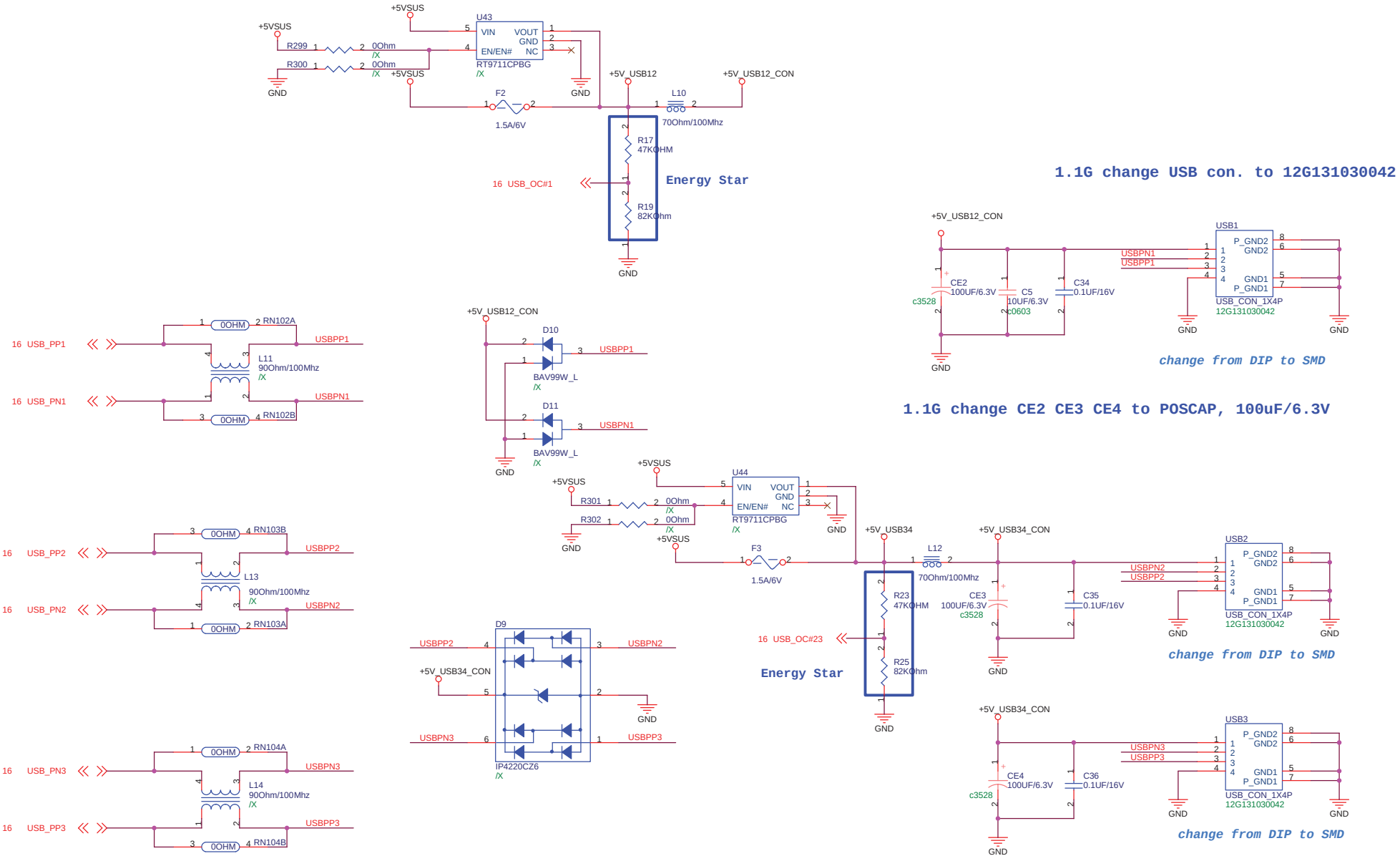

<Variant Name>

ASUSTek Computer INC.	Title : USB Port	
	Engineer: Kell_Huang	
Size: A3	Project Name: 1002	Rev: 1.3G
Date: Friday, October 03, 2008	Sheet 27 of 50	

Power Control

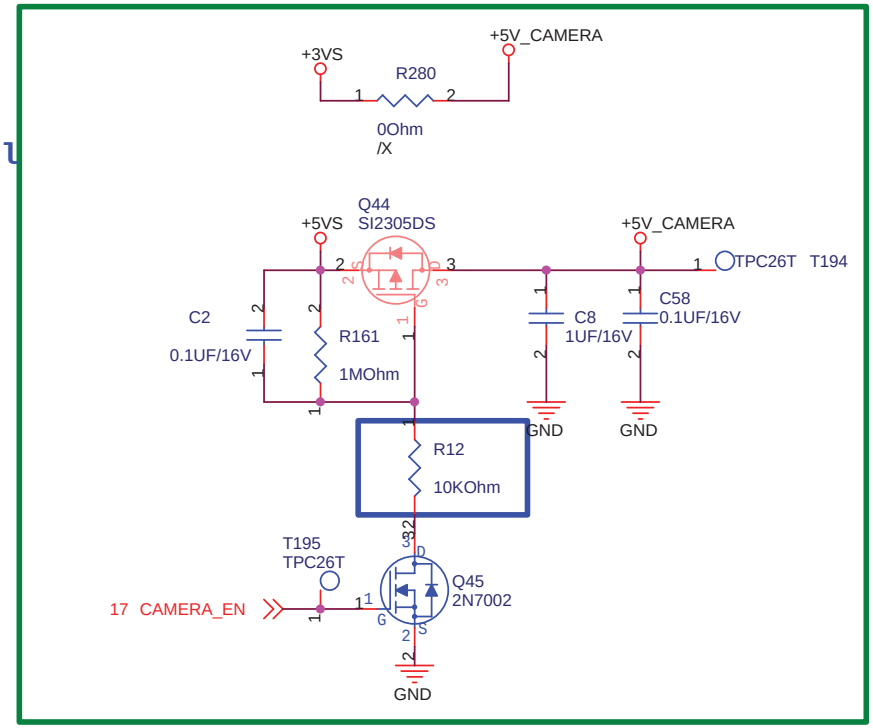

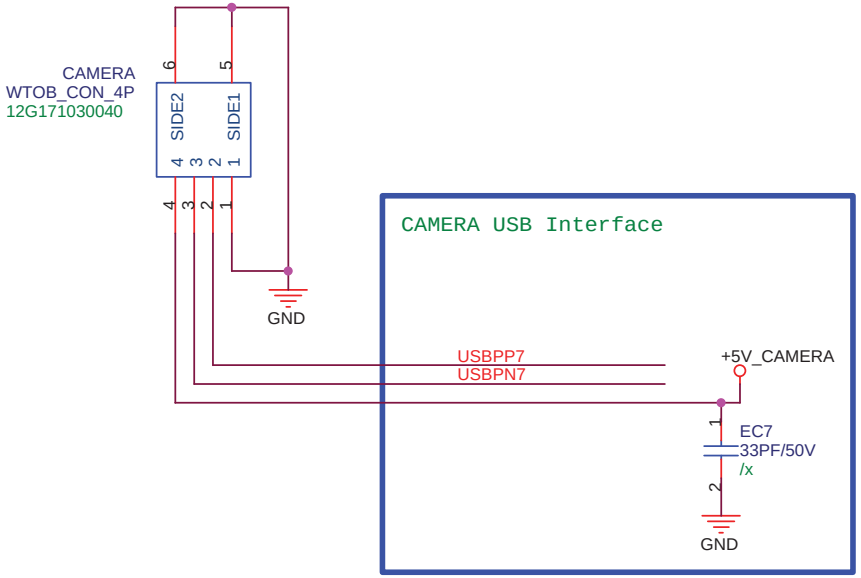

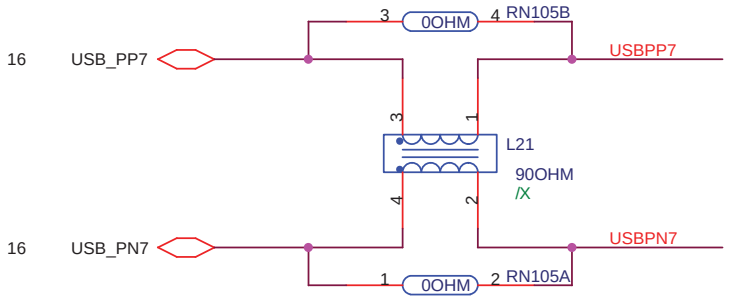

<Variant Name>

ASUSTek Computer INC.

Title : Camera Power

Engineer: Kell_Huang

Size	Project Name	Rev
A4	1002	1.3G

Date: Friday, October 03, 2008 Sheet 28 of 50

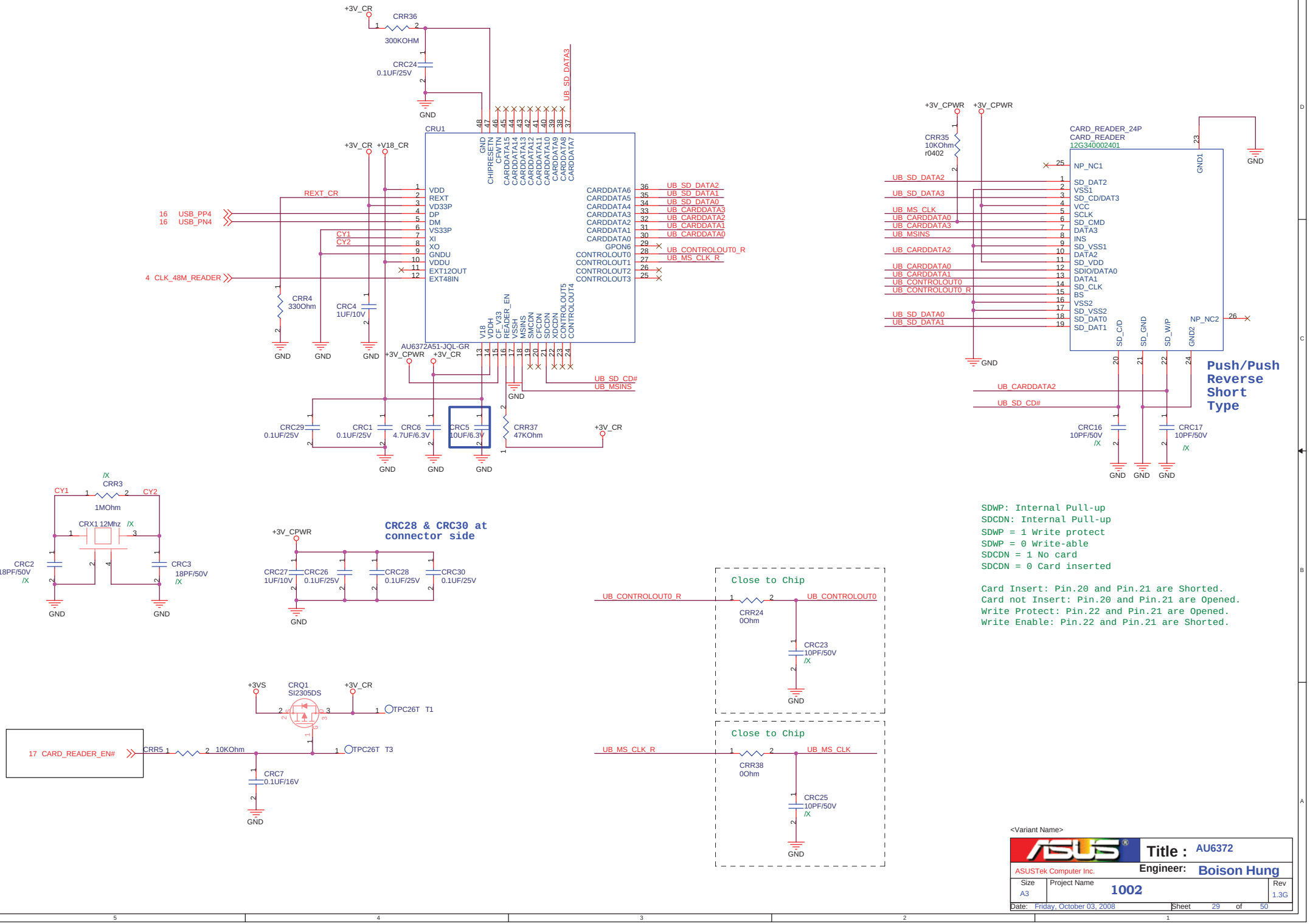
+3V_CR
CRR36
300KOHM
CRC24
0.1UF/25V
GND
UB_SD_DATA3
CRU1
+3V_CR +V18_CR
REXT_CR
16 USB_PP4
16 USB_PN4
CY1
CY2
4 CLK_48M_READER
CRR4
330Ohm
CRC4
1UF/10V
VDD
REXT
VD33P
DP
DM
VS33P
XI
XO
GNDU
VDDU
EXT12OUT
EXT48IN
CARDDATA6 UB_SD_DATA2
CARDDATA5 UB_SD_DATA1
CARDDATA4 UB_SD_DATA0
CARDDATA3 UB_CARDDATA3
CARDDATA2 UB_CARDDATA2
CARDDATA1 UB_CARDDATA1
CARDDATA0 UB_CARDDATA0
GPON6 UB_CONTROLOUT0_R
CONTROLOUT0 UB_MS_CLK_R
CONTROLOUT1
CONTROLOUT2
CONTROLOUT3
AU6372A51-JQL-GR
+3V_CPWR +3V_CR
UB_SD_CD#
UB_MSINS
CRC29 0.1UF/25V
CRC1 0.1UF/25V
CRC6 4.7UF/6.3V
CRC5 10UF/6.3V
CRR37 47KOhm
+3V_CR
/X
CRR3
CY1
CY2
1MOhm
CRX1 12Mhz /X
CRC2 18PF/50V /X
CRC3 18PF/50V /X
+3V_CPWR
CRC27 1UF/10V
CRC26 0.1UF/25V
CRC28 0.1UF/25V
CRC30 0.1UF/25V
CRC28 & CRC30 at connector side
+3VS
CRQ1 SI2305DS
+3V_CR
TPC26T T1
17 CARD_READER_EN#
CRR5 10KOhm
TPC26T T3
CRC7 0.1UF/16V
+3V_CPWR +3V_CPWR
CRR35 10KOhm r0402
CARD_READER_24P
CARD_READER
12G340002401
NP_NC1
SD_DAT2
VSS1
SD_CD/DAT3
VCC
SCLK
SD_CMD
DATA3
INS
SD_VSS1
DATA2
SD_VDD
SDIO/DATA0
DATA1
SD_CLK
BS
VSS2
SD_VSS2
SD_DAT0
SD_DAT1
GND1
NP_NC2
GND2
SD_C/D
SD_GND
SD_W/P
UB_CARDDATA2
UB_SD_CD#
CRC16 10PF/50V /X
CRC17 10PF/50V /X
Push/Push Reverse Short Type
SDWP: Internal Pull-up
SDCDN: Internal Pull-up
SDWP = 1 Write protect
SDWP = 0 Write-able
SDCDN = 1 No card
SDCDN = 0 Card inserted
Card Insert: Pin.20 and Pin.21 are Shorted.
Card not Insert: Pin.20 and Pin.21 are Opened.
Write Protect: Pin.22 and Pin.21 are Opened.
Write Enable: Pin.22 and Pin.21 are Shorted.
Close to Chip
UB_CONTROLOUT0_R
CRR24 0Ohm
UB_CONTROLOUT0
CRC23 10PF/50V /X
Close to Chip
UB_MS_CLK_R
CRR38 0Ohm
UB_MS_CLK
CRC25 10PF/50V /X
<Variant Name>
Title : AU6372
ASUSTek Computer Inc.
Engineer: Boison Hung
Size A3
Project Name 1002
Rev 1.3G
Date: Friday, October 03, 2008
Sheet 29 of 50

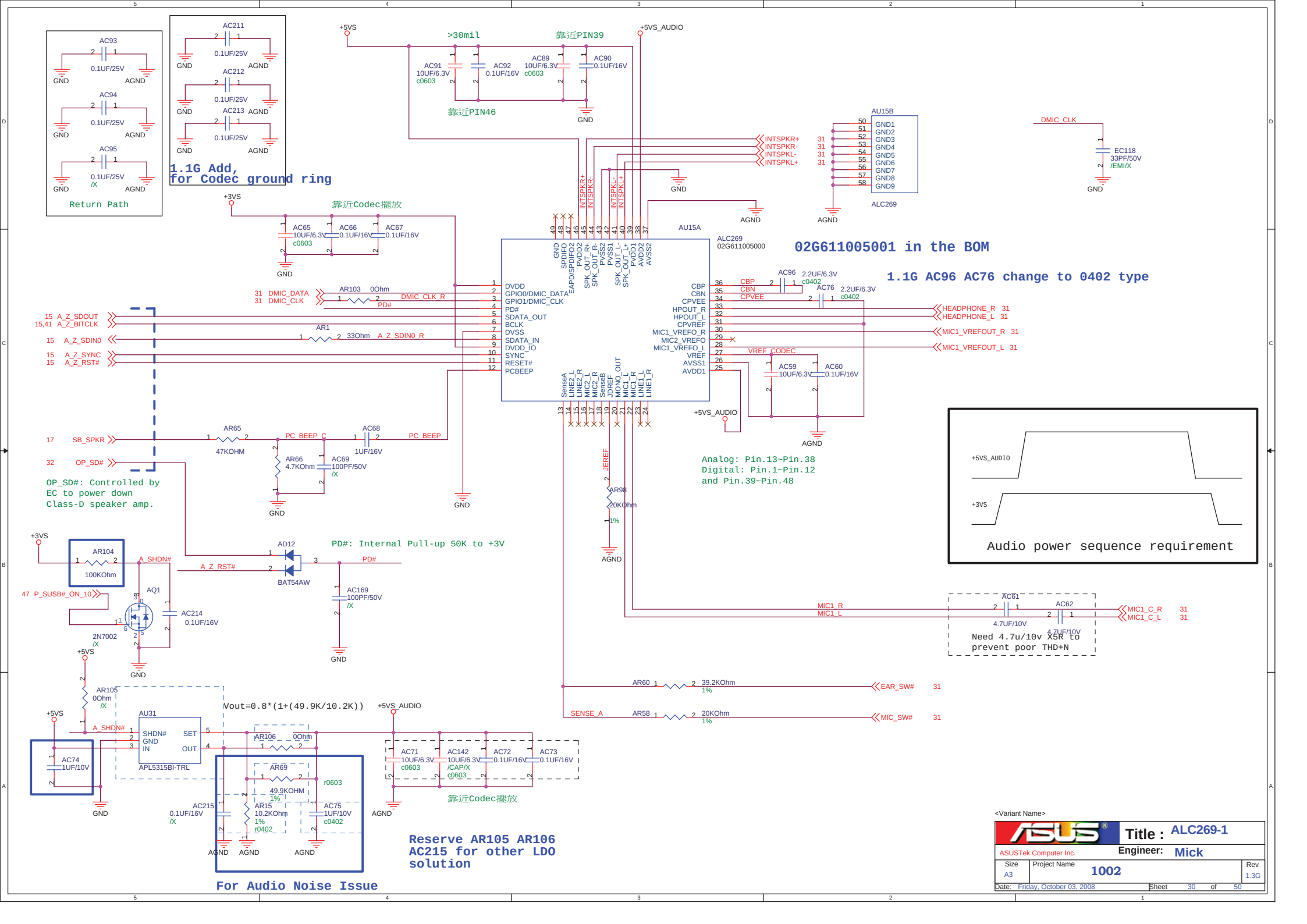
AC93 0.1UF/25V
AC94 0.1UF/25V
AC95 0.1UF/25V /X
Return Path
AC211 0.1UF/25V
AC212 0.1UF/25V
AC213 0.1UF/25V
1.1G Add, for Codec ground ring
+5VS
>30mil
靠近PIN39
+5VS_AUDIO
AC91 10UF/6.3V c0603
AC92 0.1UF/16V
AC89 10UF/6.3V c0603
AC90 0.1UF/16V
靠近PIN46
AU15B
ALC269
DMIC_CLK
EC118 33PF/50V /EMI/X
INTSPKR+
INTSPKR-
INTSPKL-
INTSPKL+
+3VS
靠近Codec擺放
AC65 10UF/6.3V c0603
AC66 0.1UF/16V
AC67 0.1UF/16V
AU15A
ALC269 02G611005000
02G611005001 in the BOM
1.1G AC96 AC76 change to 0402 type
AC96 2.2UF/6.3V c0402
AC76 2.2UF/6.3V c0402
DMIC_DATA
DMIC_CLK
AR103 0Ohm
DMIC_CLK_R
PD#
A_Z_SDOUT
A_Z_BITCLK
A_Z_SDIN0
A_Z_SYNC
A_Z_RST#
AR1 33Ohm A_Z_SDIN0_R
HEADPHONE_R
HEADPHONE_L
MIC1_VREFOUT_R
MIC1_VREFOUT_L
VREF_CODEC
AC59 10UF/6.3V
AC60 0.1UF/16V
SB_SPKR
OP_SD#
AR65 47KOHM
PC_BEEP_C
PC_BEEP
AC68 1UF/16V
AR66 4.7KOhm
AC69 100PF/50V /X
OP_SD#: Controlled by EC to power down Class-D speaker amp.
Analog: Pin.13~Pin.38
Digital: Pin.1~Pin.12
and Pin.39~Pin.48
JEREF
AR98 20KOhm 1%
Audio power sequence requirement
AR104 100KOhm
A_SHDN#
AD12 BAT54AW
PD#: Internal Pull-up 50K to +3V
AC169 100PF/50V /X
P_SUSB#_ON_10
AQ1 2N7002 /X
AC214 0.1UF/16V
MIC1_R
MIC1_L
AC61 4.7UF/10V
AC62 4.7UF/10V
MIC1_C_R
MIC1_C_L
Need 4.7u/10v X5R to prevent poor THD+N
AR60 39.2KOhm 1%
EAR_SW#
SENSE_A
AR58 20KOhm 1%
MIC_SW#
AR105 0Ohm /X
AU31 APL5315BI-TRL
Vout=0.8*(1+(49.9K/10.2K))
AR106 0Ohm
AR69 49.9KOHM 1% r0603
AR15 10.2KOhm 1% r0402
AC74 1UF/10V
AC215 0.1UF/16V /X
AC75 1UF/10V c0402
AC71 10UF/6.3V c0603
AC142 10UF/6.3V /CAP/X c0603
AC72 0.1UF/16V
AC73 0.1UF/16V
靠近Codec擺放
Reserve AR105 AR106 AC215 for other LDO solution
For Audio Noise Issue
<Variant Name>
Title : ALC269-1
ASUSTek Computer Inc.
Engineer: Mick
Size A3
Project Name 1002
Rev 1.3G
Date: Friday, October 03, 2008
Sheet 30 of 50

1.1G add PWR LED and Charge LED

DMIC Cable length should be less 30cm

Change R291 R292 R293 to 510 Ohm

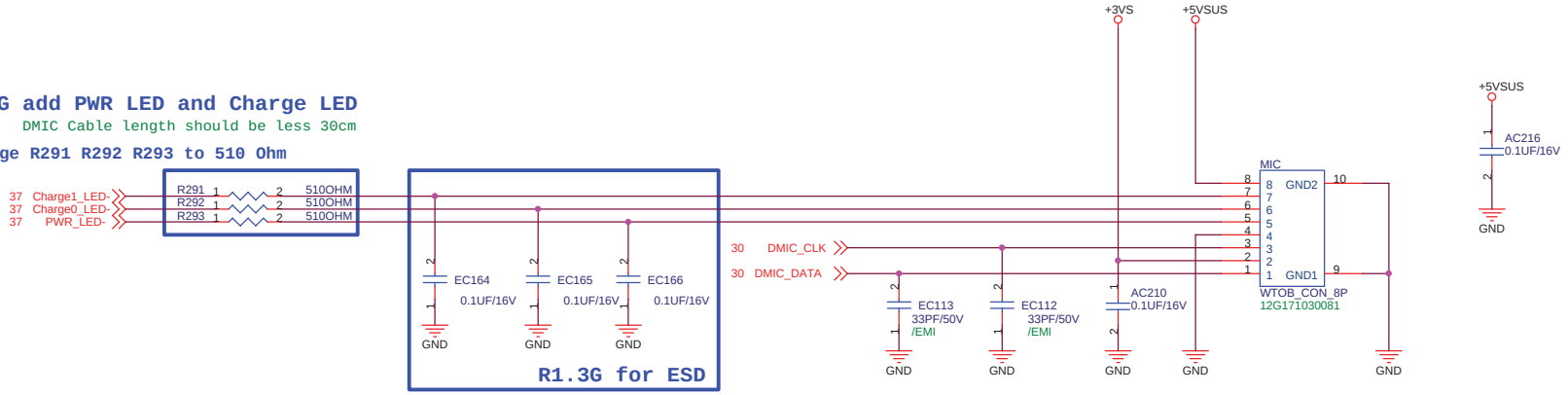

Total length from speakerR+- L+-(pin40 41 44 45) to internal speaker please as short as possible(<20cm is better)

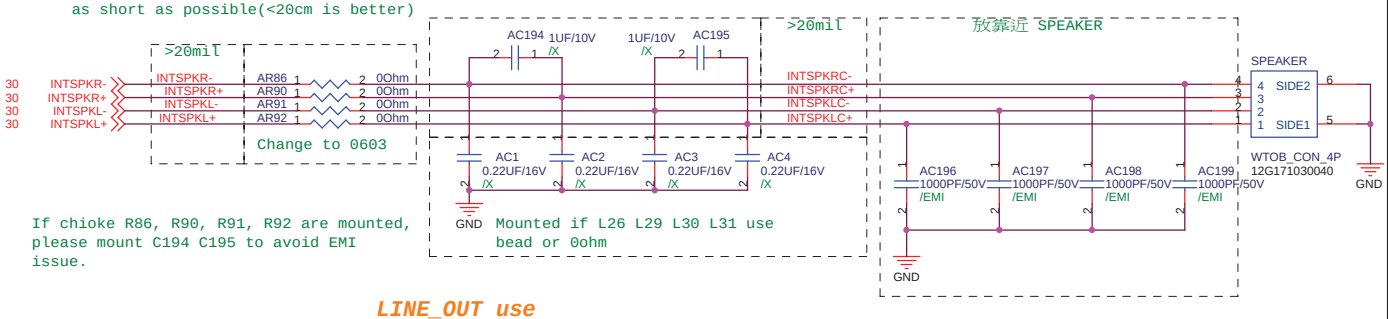

If chioke R86, R90, R91, R92 are mounted, please mount C194 C195 to avoid EMI issue.

LINE_OUT use 12G14050106P(SINGATRON) Black

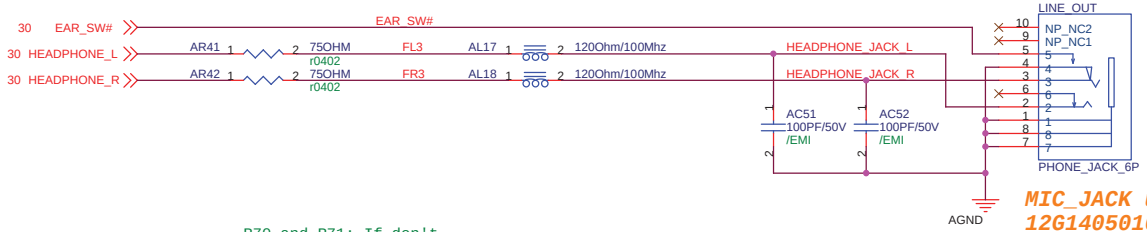

1.1G Change audio con. to black

change from DIP to SMD

MIC_JACK use 12G14050106P(SINGATRON) Black

R70 and R71: If don't need retasking function, change to 1K.

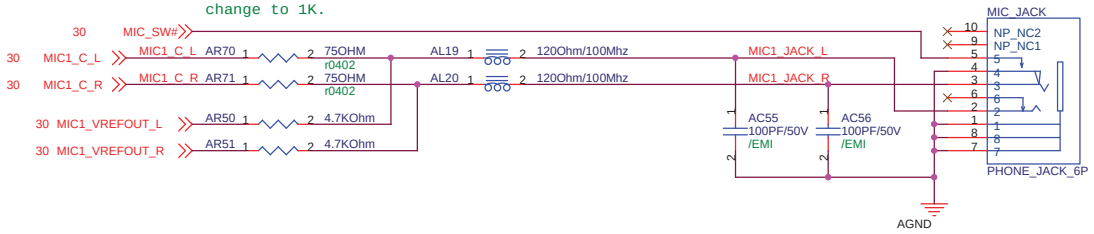

1.1G Change audio con. to black

change from DIP to SMD

<Variant Name>

ASUSTek Computer Inc.	Title : ALC269-2	
	Engineer: MICK	
Size: A3	Project Name: 1002	Rev: 1.3G
Date: Friday, October 03, 2008	Sheet 31 of 50	

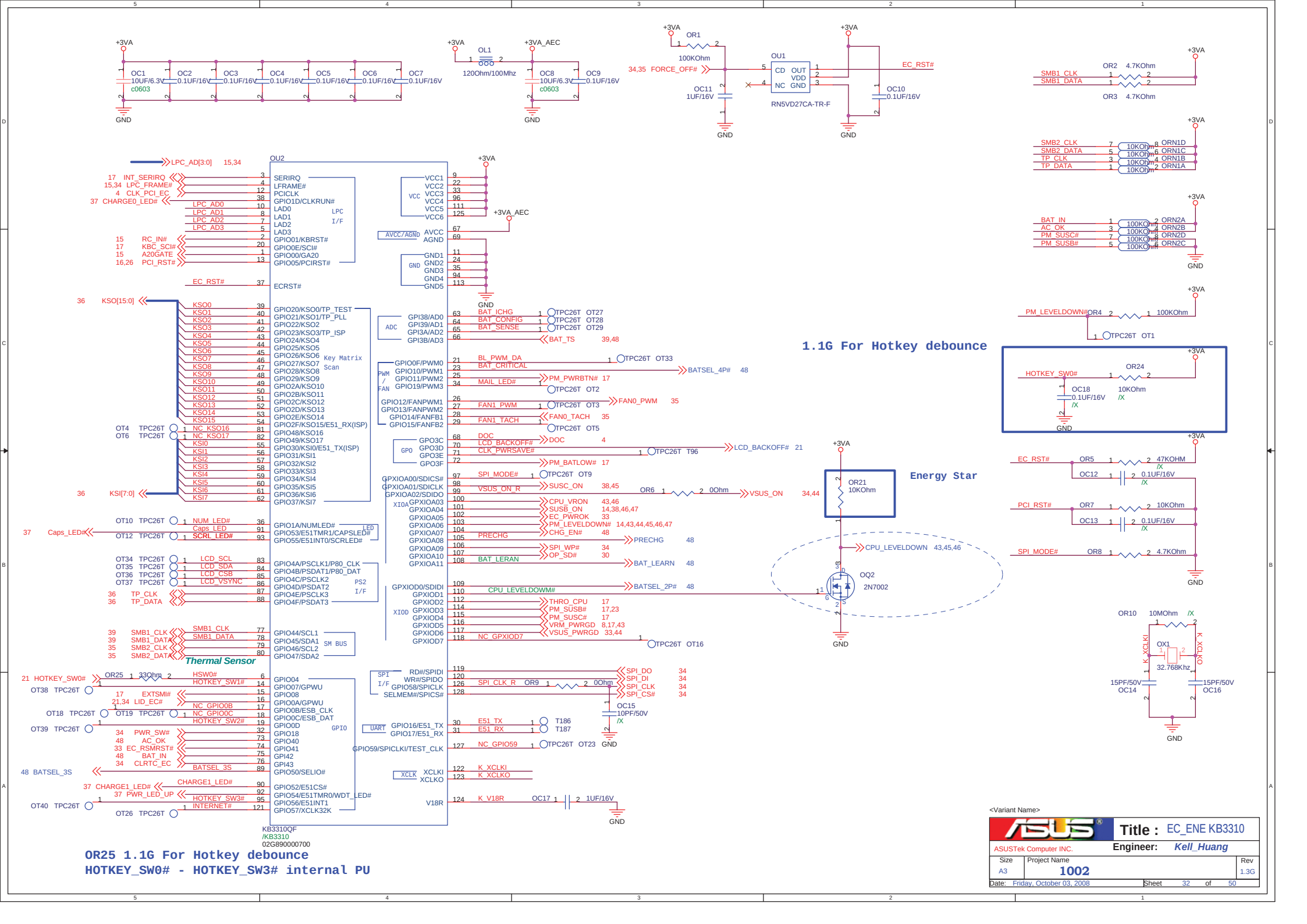
OU2
KB3310QF
/KB3310
02G890000700
1.1G For Hotkey debounce
Energy Star
Thermal Sensor
OR25 1.1G For Hotkey debounce
HOTKEY_SW0# - HOTKEY_SW3# internal PU
Title : EC_ENE KB3310
ASUSTek Computer INC.
Engineer: Kell_Huang
Size A3
Project Name 1002
Rev 1.3G
Date: Friday, October 03, 2008
Sheet 32 of 50

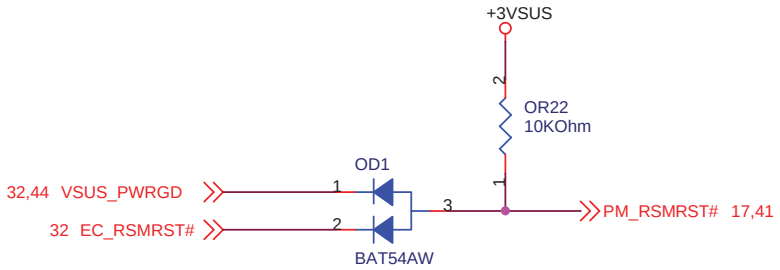

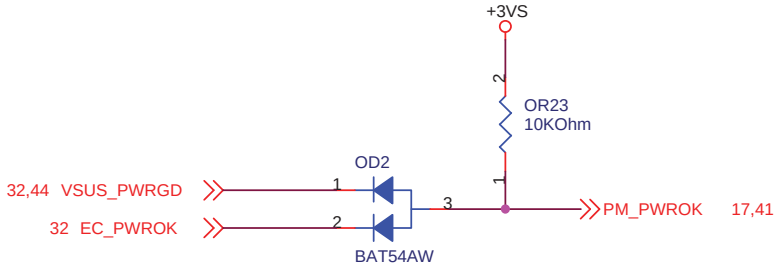

<Variant Name>

ASUSTek Computer INC.	Title : EC_UART_KC3820	
	Engineer: Kell_Huang	
Size: A4	Project Name: 1002	Rev: 1.3G
Date: Friday, October 03, 2008	Sheet 33 of 50	

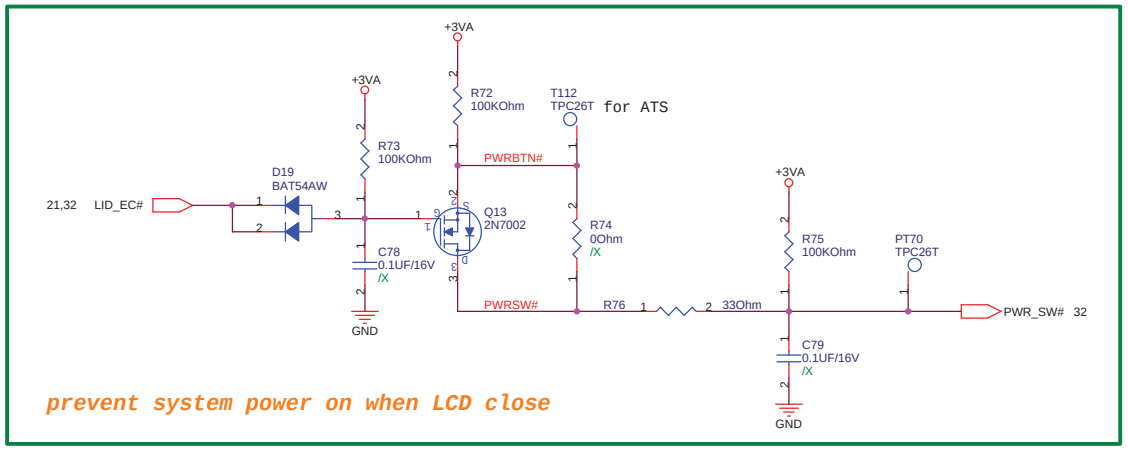

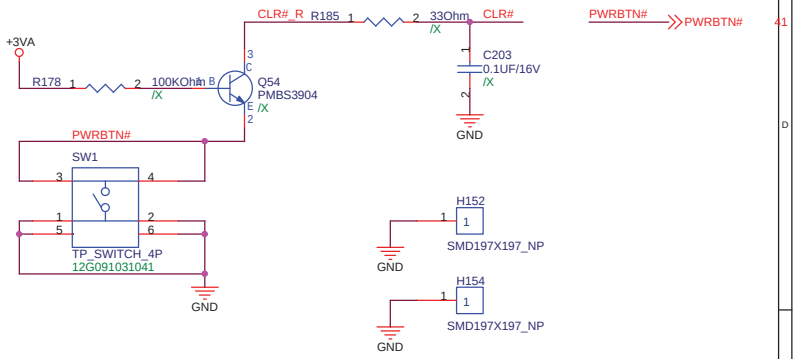

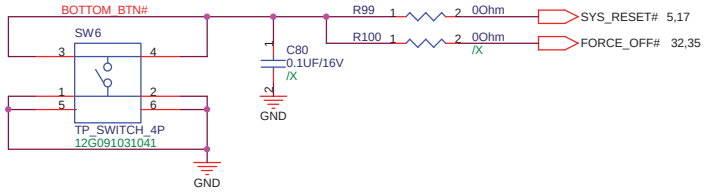

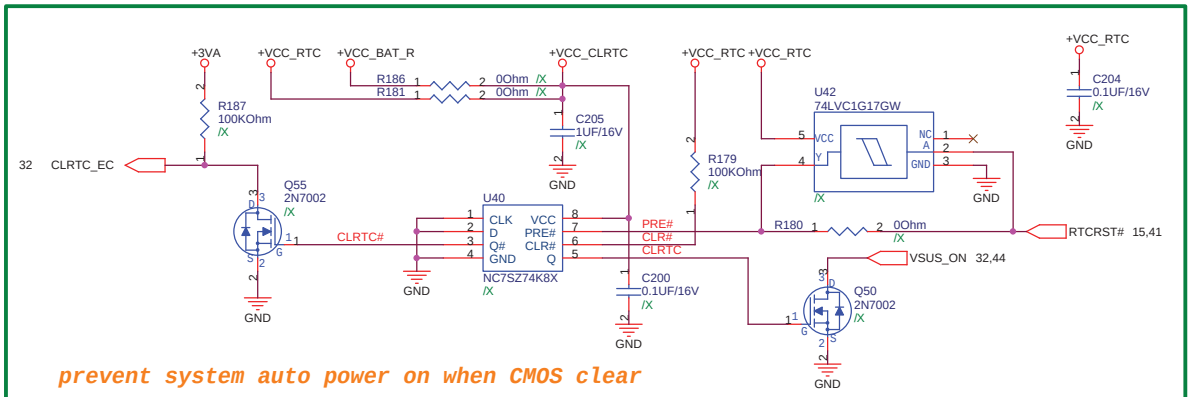

For Debug

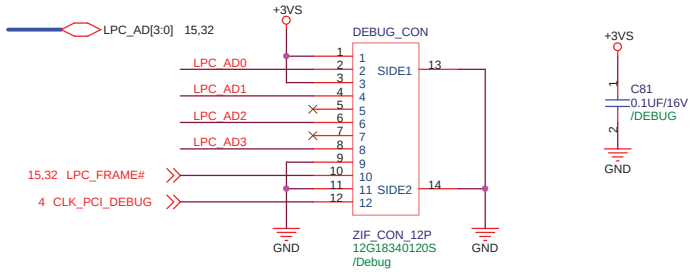

Debug Card cable use Z96 Touch Pad cable, P/N: 14G124110126, 14G124110120, 14G124110121 14G124110124, 14G124110125

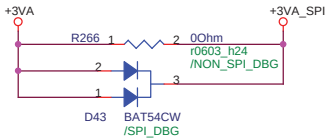

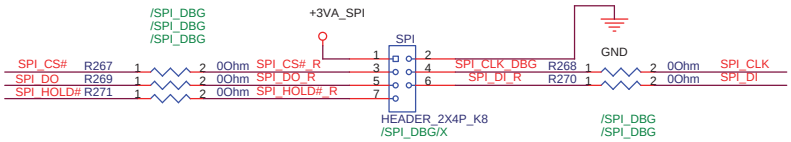

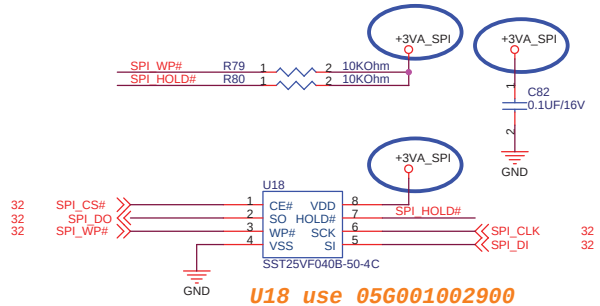

<variant_name>

ASUSTek Computer INC.	Title : Switch_SPI ROM_Debug	
	Engineer: Kell_Huang	
Size: A3	Project Name: 1002	Rev: 1.3G
Date: Friday, October 03, 2008	Sheet 34 of 50	

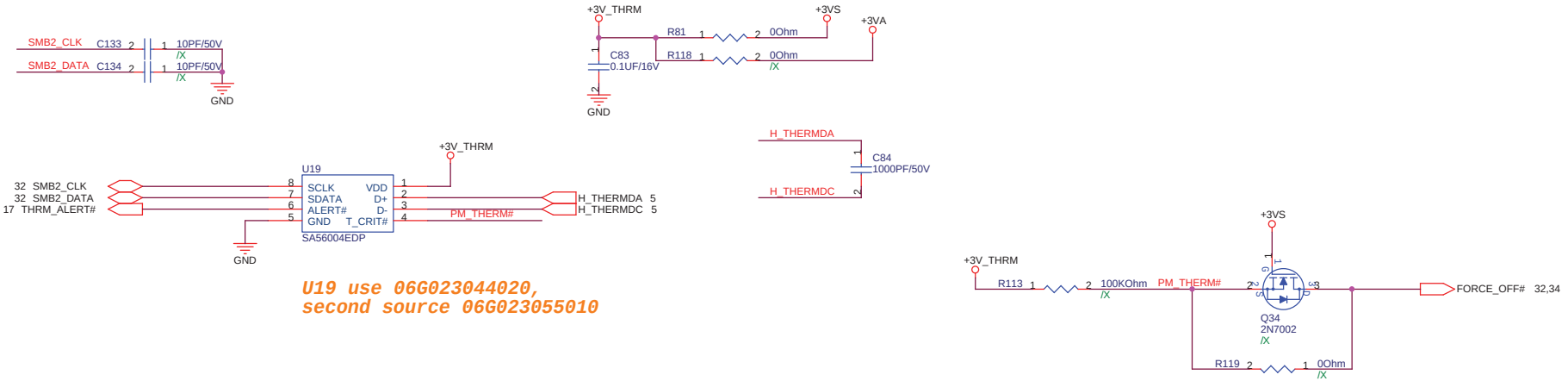

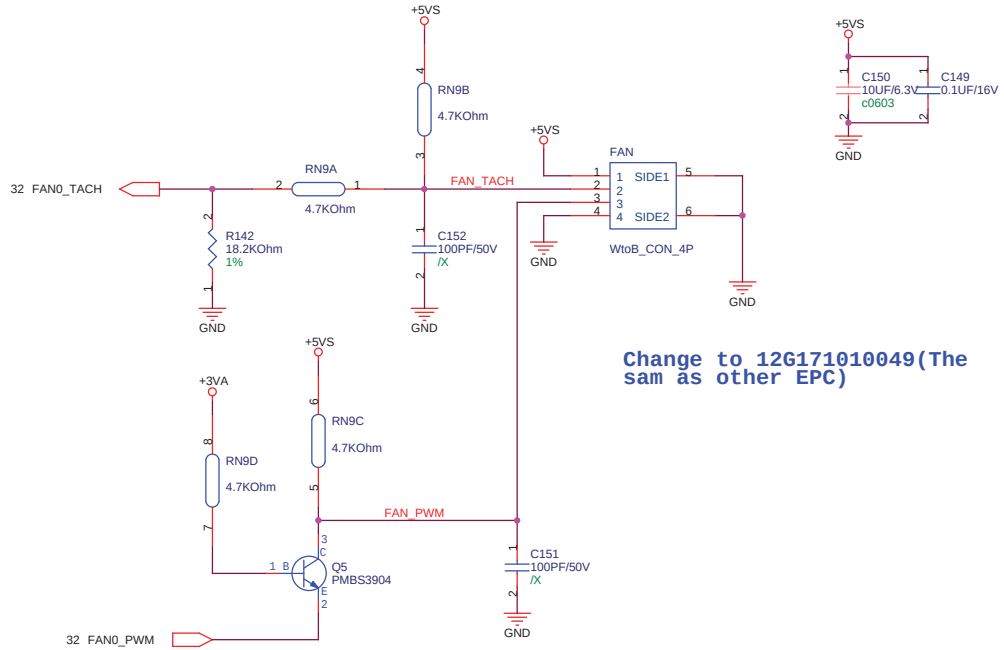

<Variant Name>

ASUSTek Computer INC.	Title : Thermal Sensor_FAN	
	Engineer: Kell_Huang	
Size: A3	Project Name: 1002	Rev: 1.3G
Date: Friday, October 03, 2008	Sheet 35 of 50	

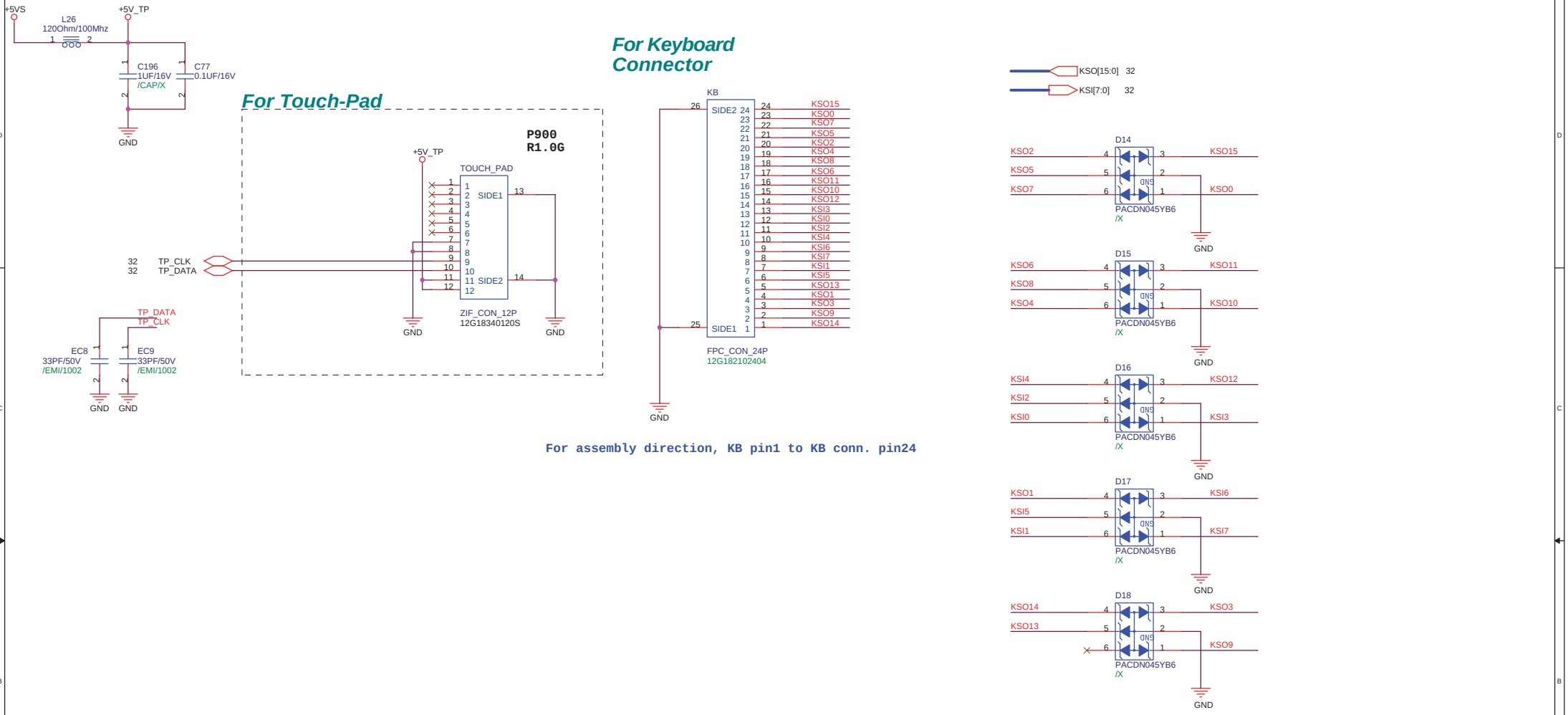

For assembly direction, KB pin1 to KB conn. pin24

<Variant Name>

ASUSTek Computer INC.	Title : KB_Touch Pad	
	Engineer: Kell_Huang	
Size: A3	Project Name: 1002	Rev: 1.3G
Date: Friday, October 03, 2008	Sheet 36 of 50	

for POWER LED White

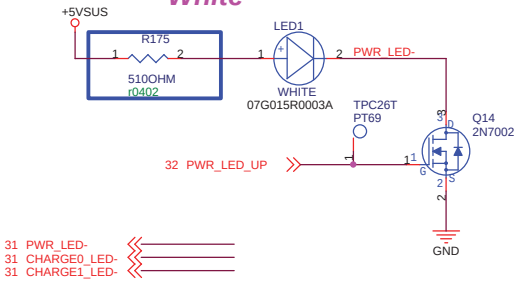

for FLASH LED White

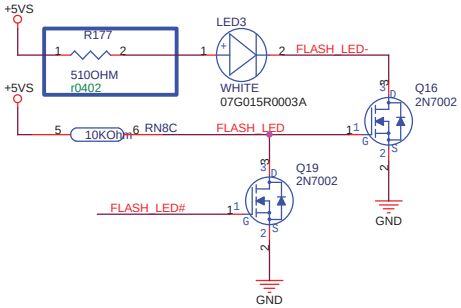

White /X

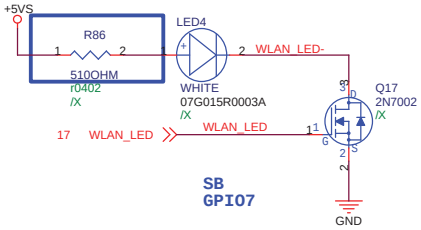

for WIFI/BlueTooth LED White

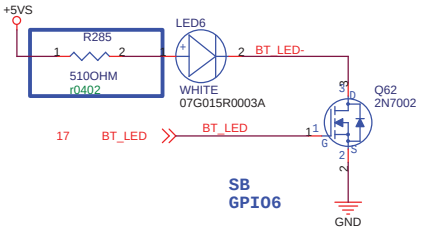

1.1G change to EVERLIGHT

for CHARGE LED Height：0.55mm

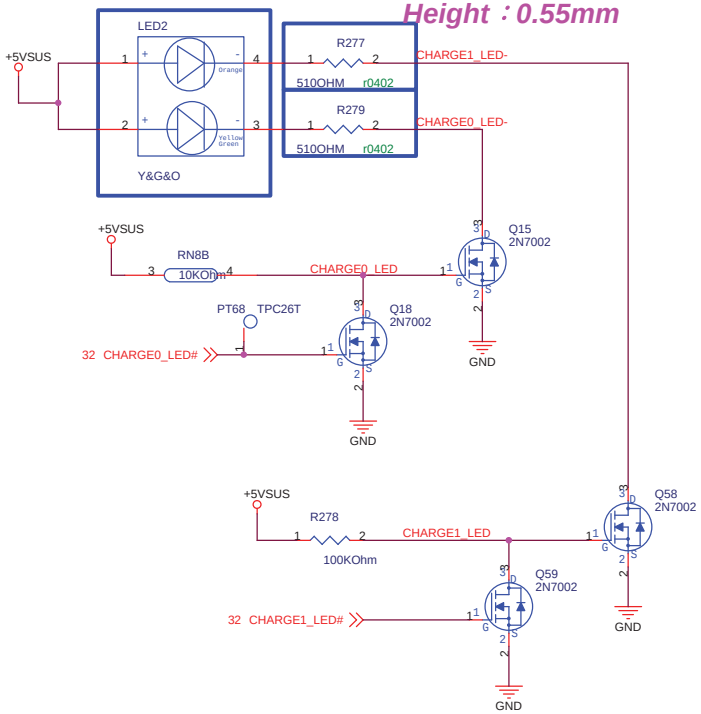

Change LED resistor to 510 Ohm, about 4mA

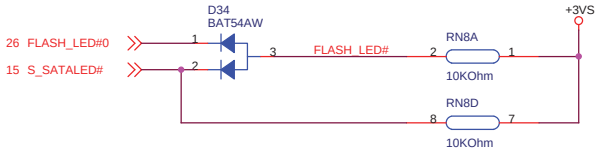

for Caps Lock LED White

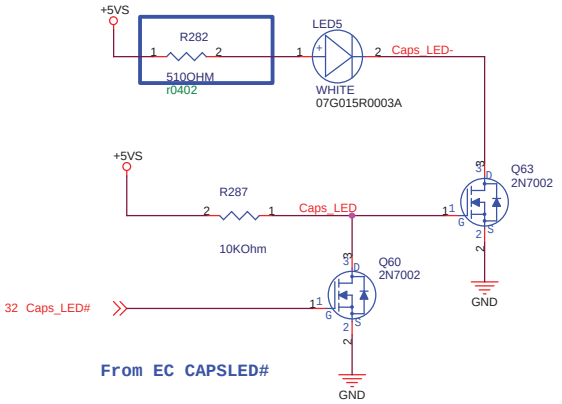

The battery charge indicator (LED) shows the status of the battery' s power as follows:

cenario	Adapter mode	Battery mode
Battery power is between 100%~80%	Orange ON	Green ON
Battery power is between 80%~10%	Orange Blinking Slowly	Green Blinking Slowly
Battery power is less than 10%	Orange Blinking Quickly	Green Blinking Quickly
S3/S5 Mode	Scenario the same as above	Off

Note: The BATTERY LED should be off when the machine has no battery attached.

<Variant Name>

ASUSTek Computer INC.

Title : LED

Engineer: Kell_Huang

Size	Project Name	Rev
A3	1002	1.3G

Date: Friday, October 03, 2008 Sheet 37 of 50

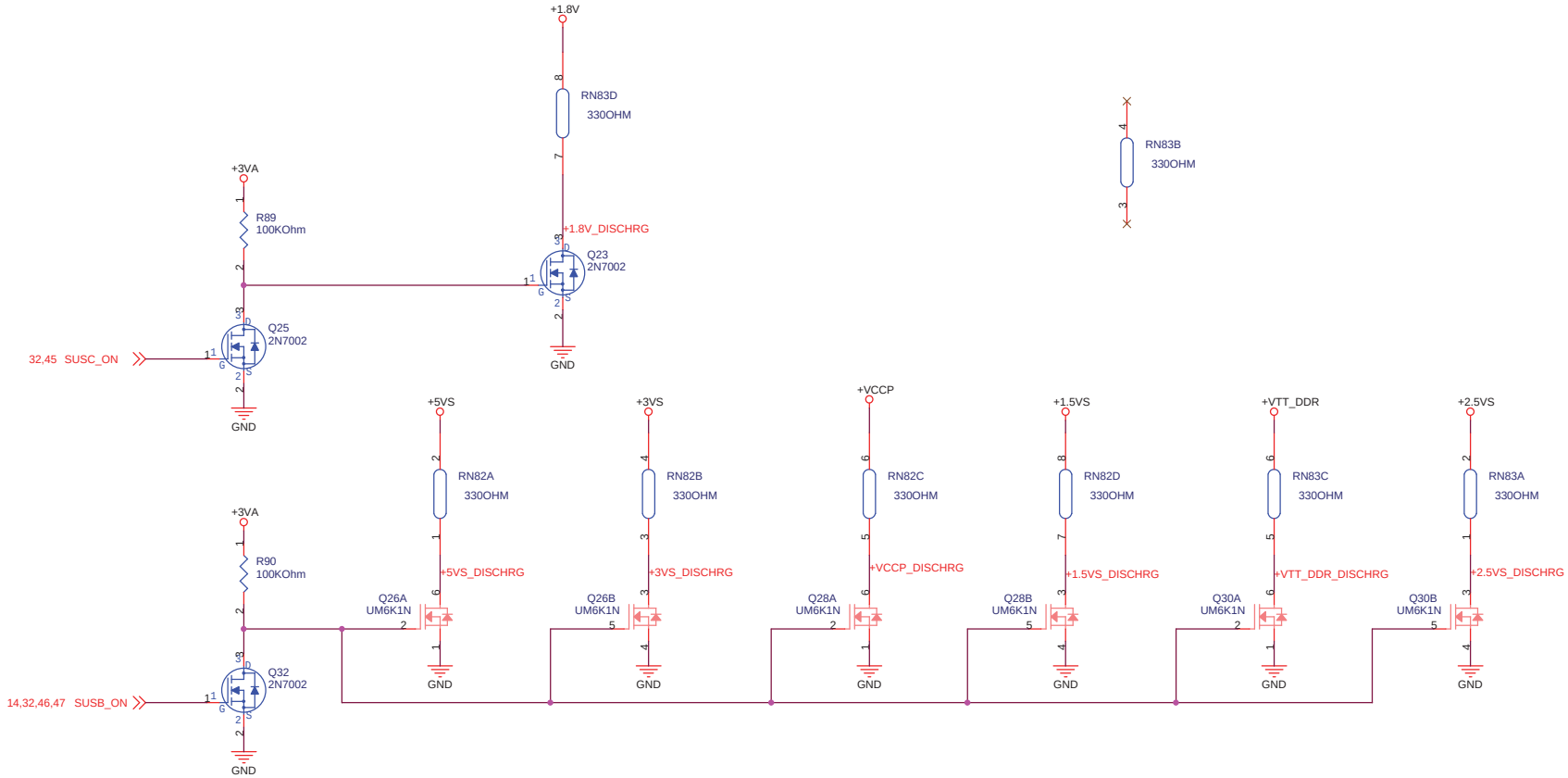

<Variant Name>

ASUSTek Computer INC.	Title : Discharge	
	Engineer: Kell_Huang	
Size: A3	Project Name: 1002	Rev: 1.3G
Date: Friday, October 03, 2008	Sheet 38 of 50	

DC IN

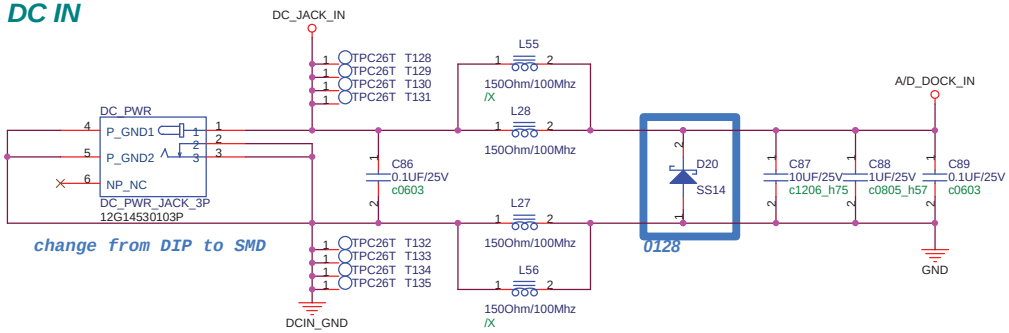

BAT IN

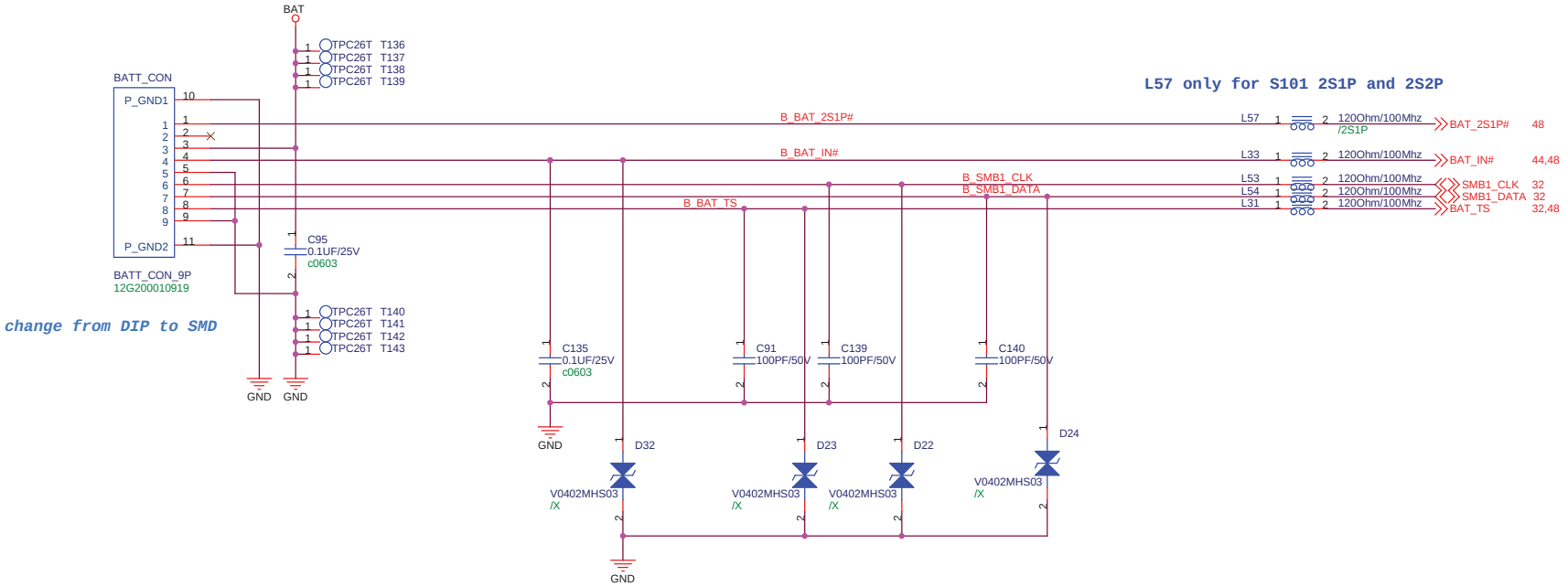

<Variant Name>

ASUSTek Computer INC.	Title : PWR Jack	
	Engineer: Kell_Huang	
Size: A3	Project Name: 1002	Rev: 1.3G
Date: Friday, October 03, 2008	Sheet 39 of 50	

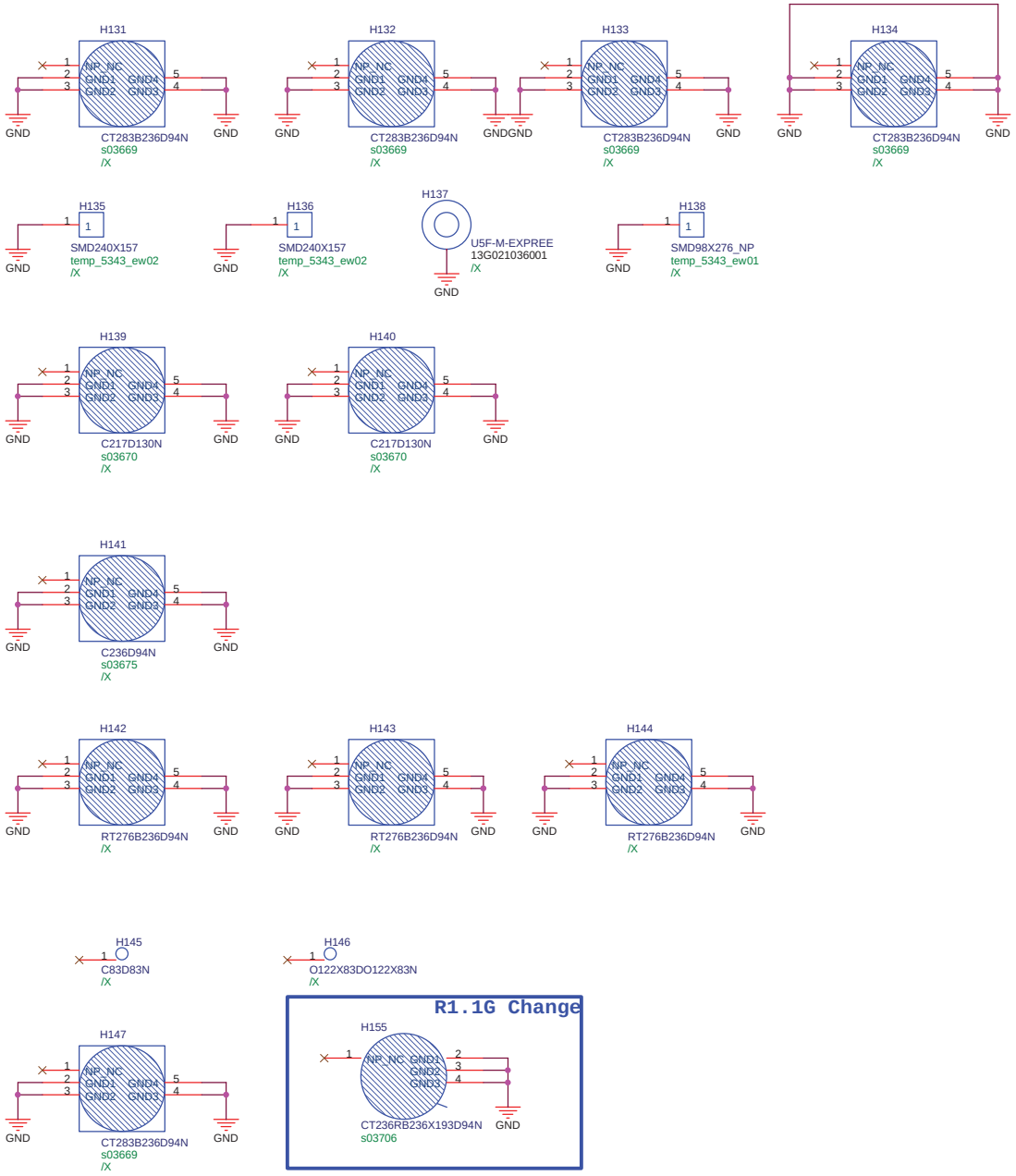

<Variant Name>

ASUSTek Computer INC.	Title : Srew Hole	
	Engineer: Kell_Huang	
Size: A3	Project Name: 1002	Rev: 1.3G
Date: Friday, October 03, 2008	Sheet 40 of 50	

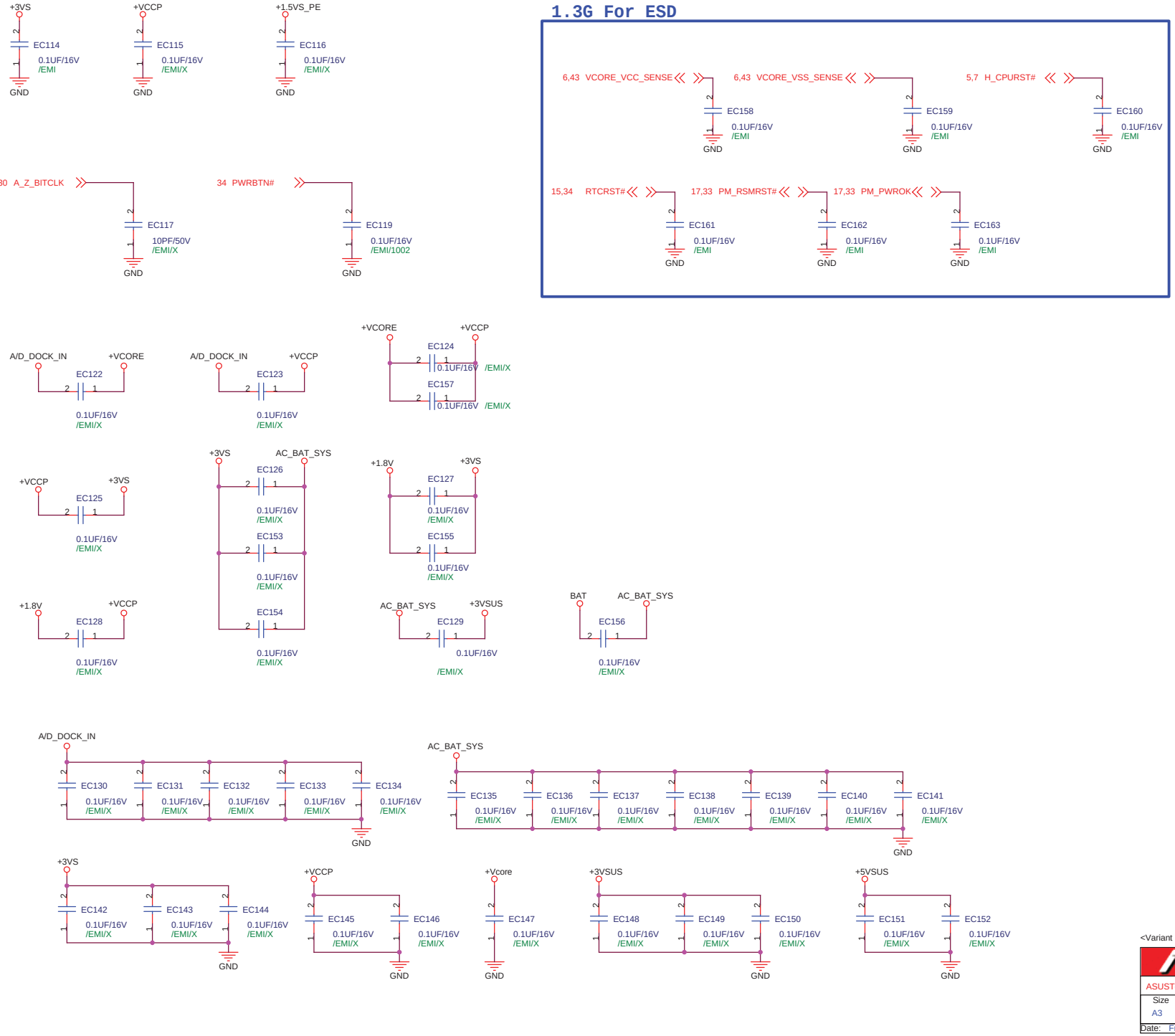

<Variant Name>

ASUSTek Computer INC.

Title : EMI

Engineer: Kell_Huang

Size	Project Name	Rev
A3	1002	1.3G

Date: Friday, October 03, 2008 Sheet 41 of 50

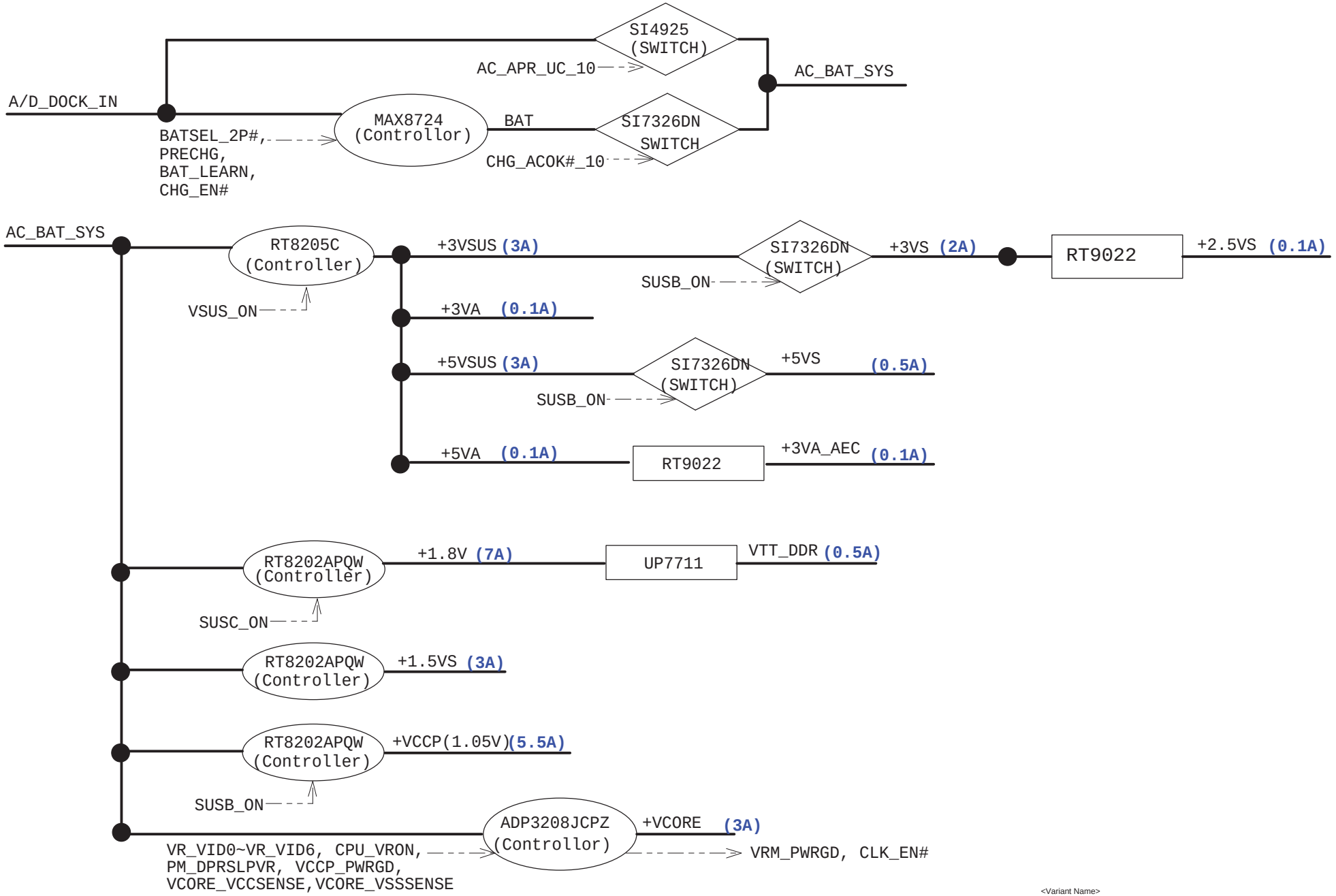

<Variant Name>

ASUSTek Computer INC.	Title : Power Flow	
	Engineer: Joy_Zhou	
Size: A3	Project Name: 1002	Rev: 1.3G
Date: Friday, October 03, 2008	Sheet 42 of 50	

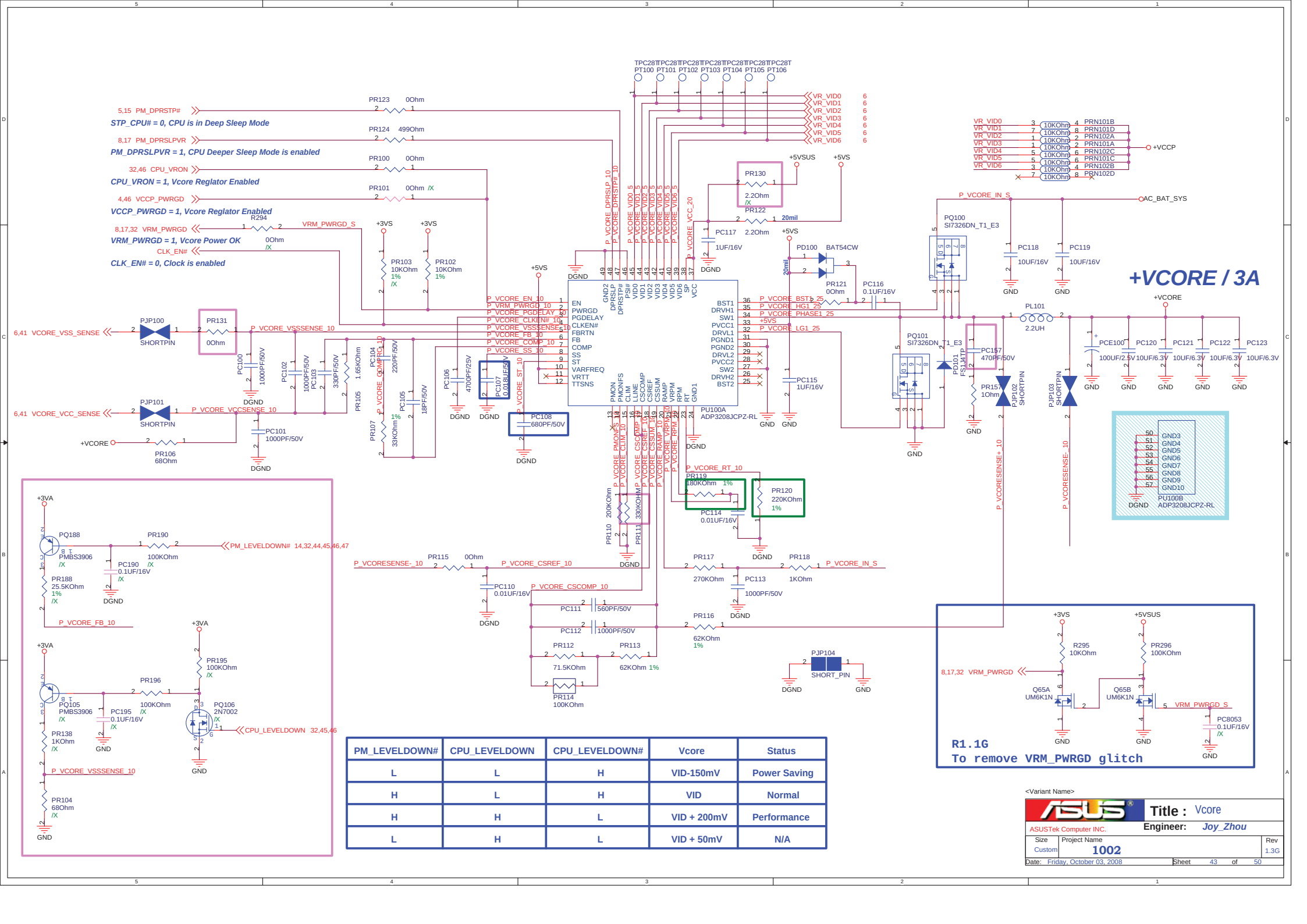

PM_LEVELDOWN#	CPU_LEVELDOWN	CPU_LEVELDOWN#	Vcore	Status
L	L	H	VID-150mV	Power Saving
H	L	H	VID	Normal
H	H	L	VID + 200mV	Performance
L	H	L	VID + 50mV	N/A

<Variant Name>

ASUSTek Computer INC.

Title : Vcore

Engineer: Joy_Zhou

Size	Project Name	Rev
Custom	1002	1.3G

Date: Friday, October 03, 2008 Sheet 43 of 50

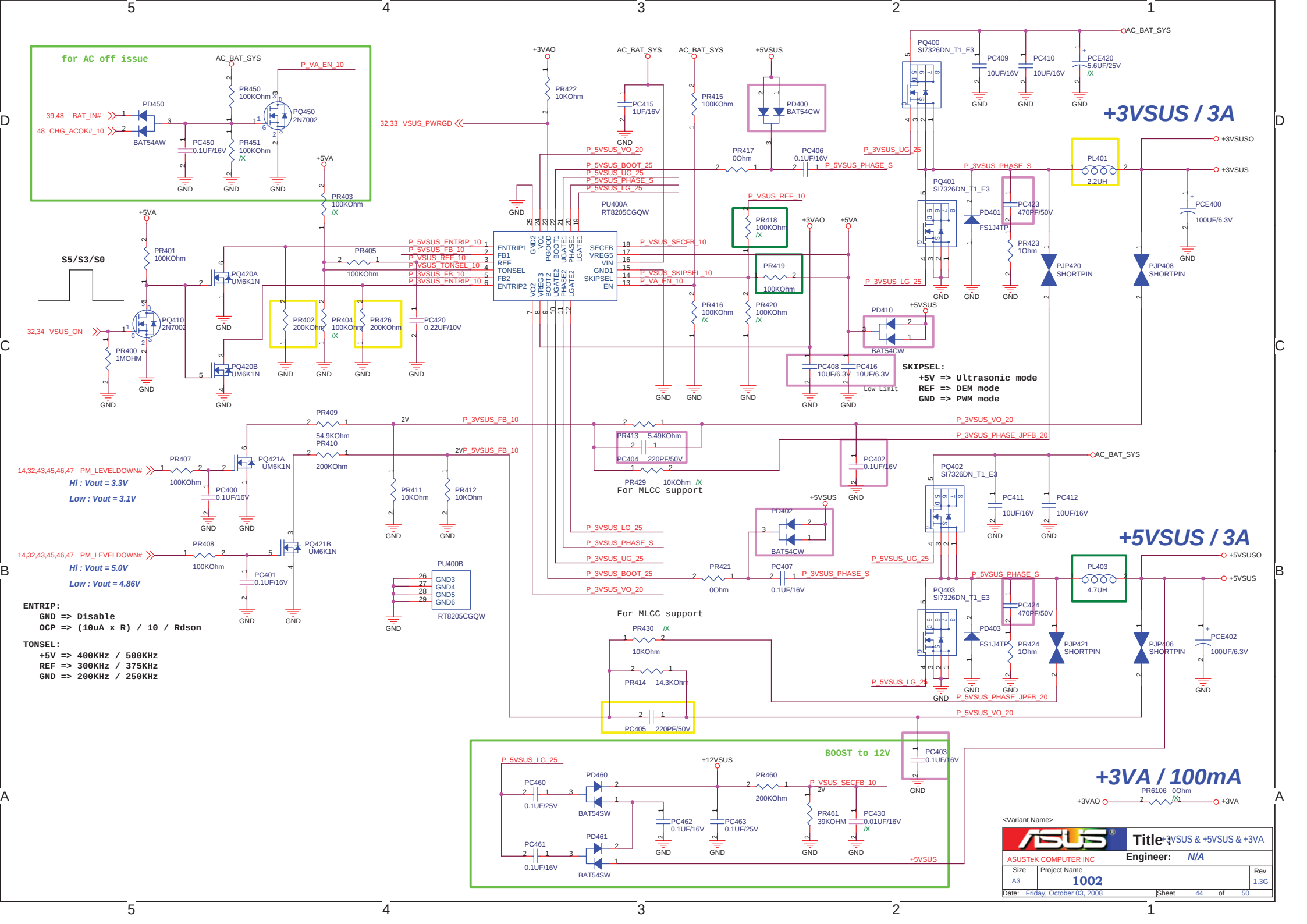
for AC off issue
AC_BAT_SYS
P_VA_EN_10
PD450
39,48 BAT_IN#
48 CHG_ACOK#_10
BAT54AW
PR450 100KOhm
PQ450 2N7002
PC450 0.1UF/16V
PR451 100KOhm /X
GND
+5VA
PR403 100KOhm /X
+3VAO
PR422 10KOhm
32,33 VSUS_PWRGD
PC415 1UF/16V
PR415 100KOhm
PD400 BAT54CW
+5VSUS
P_5VSUS_VO_20
P_5VSUS_BOOT_25
P_5VSUS_UG_25
P_5VSUS_PHASE_S
P_5VSUS_LG_25
PR417 0Ohm
PC406 0.1UF/16V
P_5VSUS_PHASE_S
PU400A RT8205CGQW
P_VSUS_REF_10
PR418 100KOhm /X
PR419 100KOhm
PR401 100KOhm
PR405 100KOhm
PQ420A UM6K1N
PQ420B UM6K1N
PQ410 2N7002
32,34 VSUS_ON
PR400 1MOHM
PR402 200KOhm
PR404 100KOhm /X
PR426 200KOhm
PC420 0.22UF/10V
P_5VSUS_ENTRIP_10
P_5VSUS_FB_10
P_VSUS_REF_10
P_VSUS_TONSEL_10
P_3VSUS_FB_10
P_3VSUS_ENTRIP_10
ENTRIP1
FB1
REF
TONSEL
FB2
ENTRIP2
GND2 VO1 PGOOD BOOT1 UGATE1 PHASE1 LGATE1
VO2 VREG3 BOOT2 UGATE2 PHASE2 LGATE2
SECFB VREG5 VIN GND1 SKIPSEL EN
P_VSUS_SECFB_10
P_VSUS_SKIPSEL_10
P_VA_EN_10
PR416 100KOhm /X
PR420 100KOhm /X
PD410 BAT54CW
PC408 10UF/6.3V
PC416 10UF/6.3V
Low Limit
SKIPSEL:
+5V => Ultrasonic mode
REF => DEM mode
GND => PWM mode
PR409 54.9KOhm
PR410 200KOhm
2V
P_3VSUS_FB_10
2VP_5VSUS_FB_10
PR413 5.49KOhm
PC404 220PF/50V
PR429 10KOhm /X
For MLCC support
P_3VSUS_VO_20
P_3VSUS_PHASE_JPFB_20
PC402 0.1UF/16V
14,32,43,45,46,47 PM_LEVELDOWN#
Hi : Vout = 3.3V
Low : Vout = 3.1V
PR407 100KOhm
PQ421A UM6K1N
PC400 0.1UF/16V
PR411 10KOhm
PR412 10KOhm
PD402 BAT54CW
P_3VSUS_LG_25
P_3VSUS_PHASE_S
P_3VSUS_UG_25
P_3VSUS_BOOT_25
P_3VSUS_VO_20
PR421 0Ohm
PC407 0.1UF/16V
P_3VSUS_PHASE_S
14,32,43,45,46,47 PM_LEVELDOWN#
Hi : Vout = 5.0V
Low : Vout = 4.86V
PR408 100KOhm
PQ421B UM6K1N
PC401 0.1UF/16V
PU400B
GND3 GND4 GND5 GND6
RT8205CGQW
For MLCC support
PR430 /X 10KOhm
PR414 14.3KOhm
PC405 220PF/50V
ENTRIP:
GND => Disable
OCP => (10uA x R) / 10 / Rdson
TONSEL:
+5V => 400KHz / 500KHz
REF => 300KHz / 375KHz
GND => 200KHz / 250KHz
BOOST to 12V
P_5VSUS_LG_25
+12VSUS
PC460 0.1UF/25V
PD460 BAT54SW
PC461 0.1UF/16V
PD461 BAT54SW
PC462 0.1UF/16V
PC463 0.1UF/25V
PR460 200KOhm
P_VSUS_SECFB_10
PR461 39KOHM
PC430 0.01UF/16V /X
PC403 0.1UF/16V
+5VSUS
+3VSUS / 3A
PQ400 SI7326DN_T1_E3
PC409 10UF/16V
PC410 10UF/16V
PCE420 5.6UF/25V /X
AC_BAT_SYS
P_3VSUS_UG_25
P_3VSUS_PHASE_S
P_3VSUS_LG_25
PQ401 SI7326DN_T1_E3
PD401 FS1J4TP
PC423 470PF/50V
PR423 1Ohm
PJP420 SHORTPIN
PJP408 SHORTPIN
PL401 2.2UH
PCE400 100UF/6.3V
+3VSUSO
+3VSUS
+5VSUS / 3A
PQ402 SI7326DN_T1_E3
PC411 10UF/16V
PC412 10UF/16V
PQ403 SI7326DN_T1_E3
PD403 FS1J4TP
PC424 470PF/50V
PR424 1Ohm
PJP421 SHORTPIN
PJP406 SHORTPIN
PL403 4.7UH
PCE402 100UF/6.3V
+5VSUSO
+5VSUS
+3VA / 100mA
PR6106 0Ohm /X
+3VAO
+3VA
<Variant Name>
Title: +3VSUS & +5VSUS & +3VA
ASUSTeK COMPUTER INC
Engineer: N/A
Size A3
Project Name 1002
Rev 1.3G
Date: Friday, October 03, 2008
Sheet 44 of 50

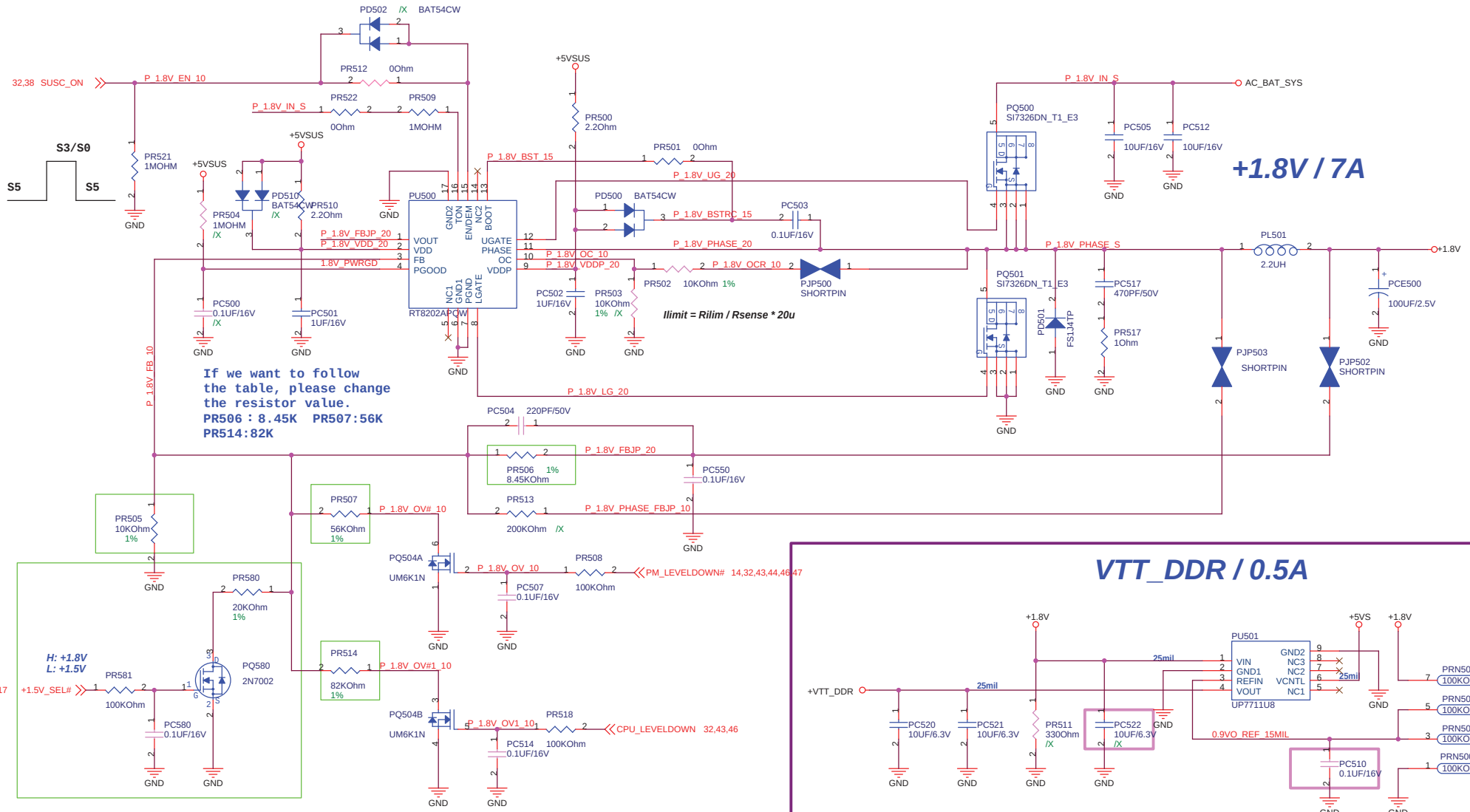

+1.5V_SEL#	PM_LEVELDOWN#	CPU_LEVELDOWN	CPU_LEVELDOWN#	Voltage	Status
H	L	L	H	1.72V	Power Saving
H	H	L	H	1.82V	Normal
H	H	H	L	1.9V	Performance
H	L	H	L	1.782V	N/A
L	L	L	H	1.4V	Power Saving
L	H	L	H	1.5V	Normal
L	H	H	L	1.58V	Performance

<Variant Name>

ASUSTek Computer INC.

Title : +1.8V & VTTDDR

Engineer: Joy_Zhou

Size	Project Name	Rev
A3	1002	1.3G

Date: Friday, October 03, 2008 Sheet 45 of 50

1.1G change Enable signal from CPU_VRON

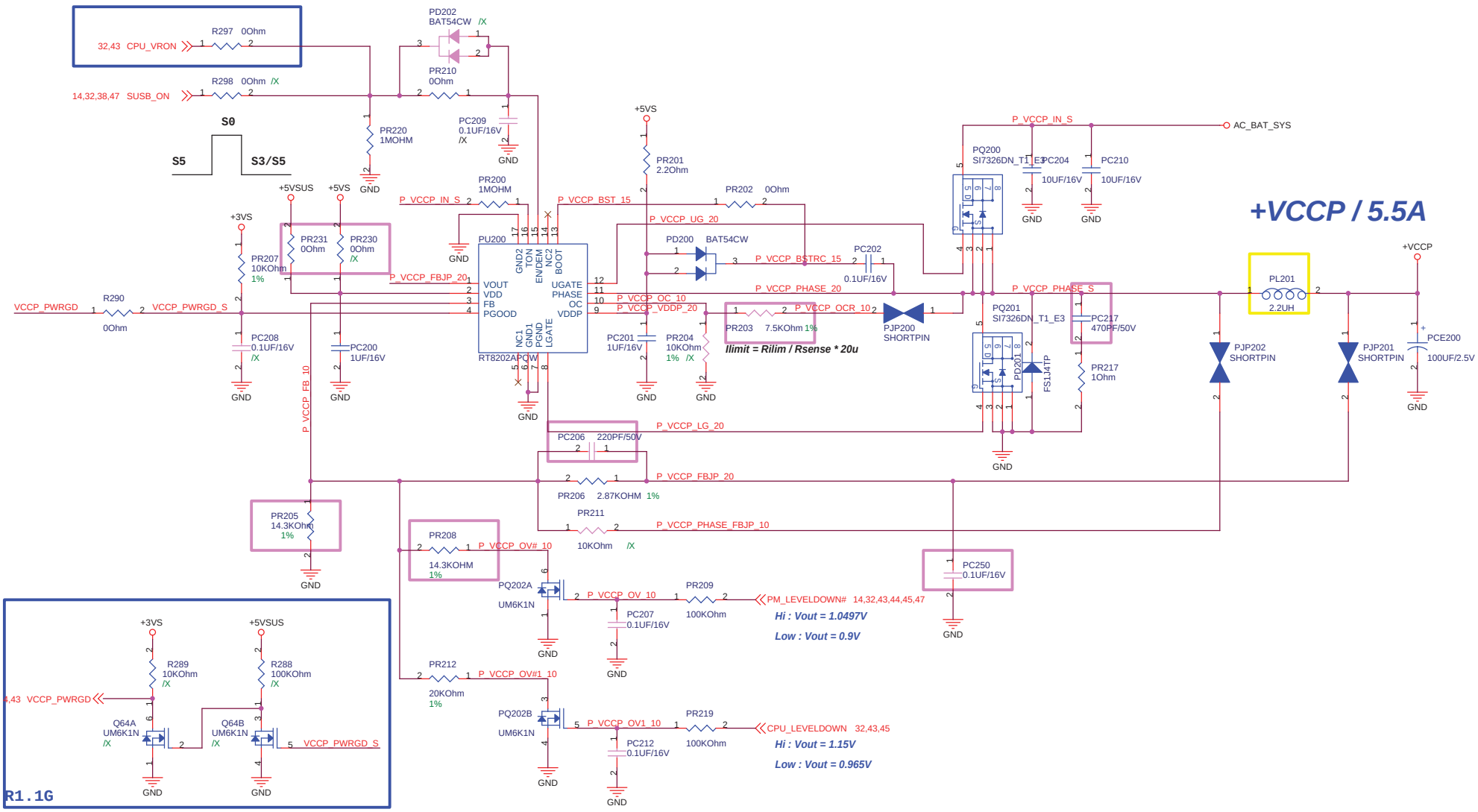

To remove VCCP_PWRGD glitch

PM_LEVELDOWN#	CPU_LEVELDOWN	CPU_LEVELDOWN#	Voltage	Status
L	L	H	0.9V	Power Saving
H	L	H	1.048V	Normal
H	H	L	1.157V	Performance
L	H	L	1.072V	N/A

<Variant Name>

Title : VCCP

ASUSTek Computer INC. Engineer: Joy_Zhou

Size	Project Name	Rev
A3	1002	1.3G

Date: Friday, October 03, 2008 Sheet 46 of 50

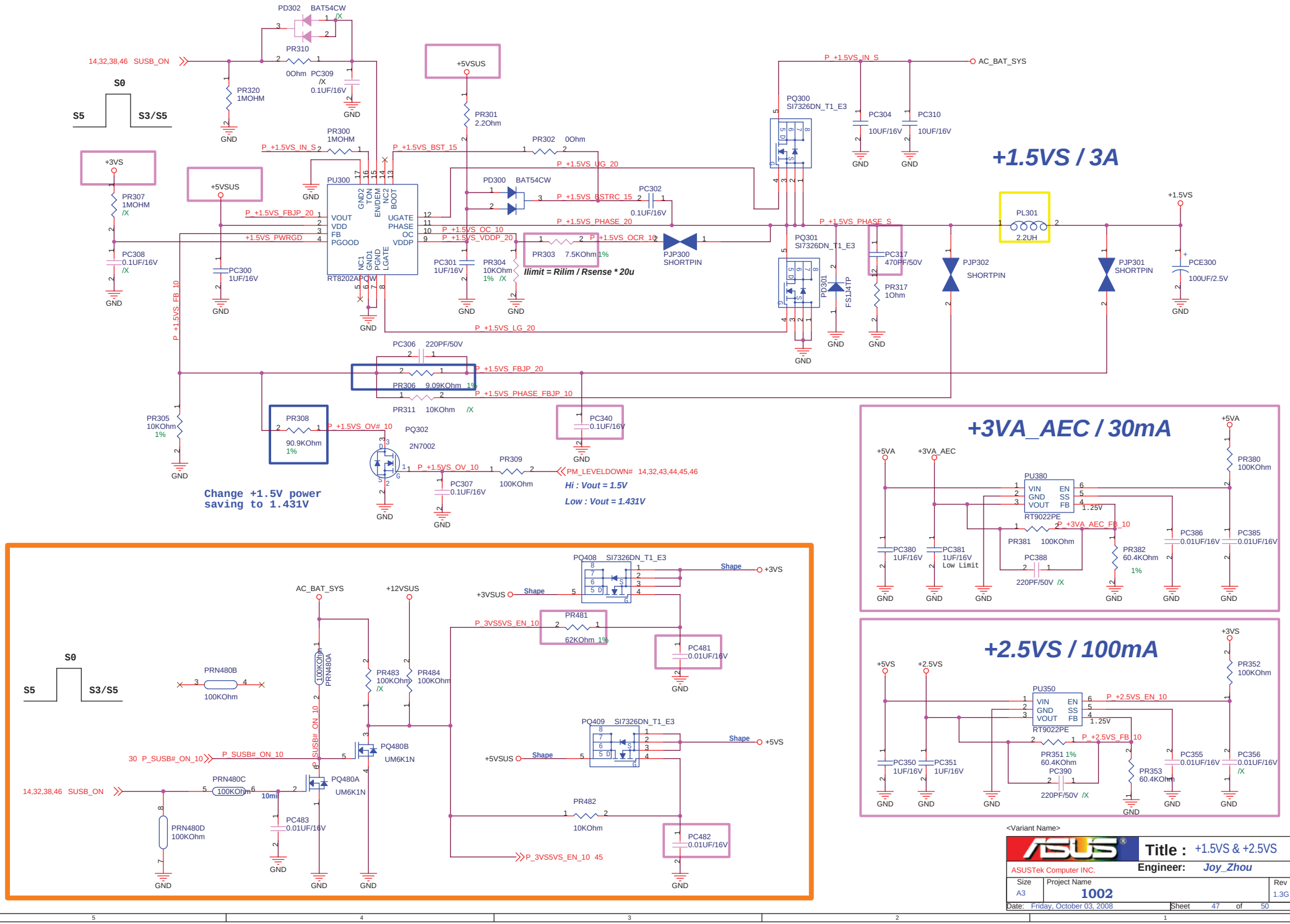

+1.5VS / 3A
+3VA_AEC / 30mA
+2.5VS / 100mA
Change +1.5V power saving to 1.431V
Hi : Vout = 1.5V
Low : Vout = 1.431V
Ilimit = Rilim / Rsense * 20u
PU300 RT8202APQW
PQ300 SI7326DN_T1_E3
PQ301 SI7326DN_T1_E3
PQ408 SI7326DN_T1_E3
PQ409 SI7326DN_T1_E3
PU380 RT9022PE
PU350 RT9022PE
PL301 2.2UH
PCE300 100UF/2.5V
PJP300 SHORTPIN
PJP302 SHORTPIN
PJP301 SHORTPIN
PD302 BAT54CW
PD300 BAT54CW
PQ302 2N7002
PQ480A UM6K1N
PQ480B UM6K1N
PM_LEVELDOWN# 14,32,43,44,45,46
P_3VS5VS_EN_10 45
14,32,38,46 SUSB_ON
30 P_SUSB#_ON_10
S0
S5
S3/S5
AC_BAT_SYS
+12VSUS
+3VSUS
+5VSUS
+3VS
+5VS
+5VA
+3VA_AEC
+5VS
+2.5VS
<Variant Name>
Title : +1.5VS & +2.5VS
ASUSTek Computer INC.
Engineer: Joy_Zhou
Size A3
Project Name 1002
Rev 1.3G
Date: Friday, October 03, 2008
Sheet 47 of 50

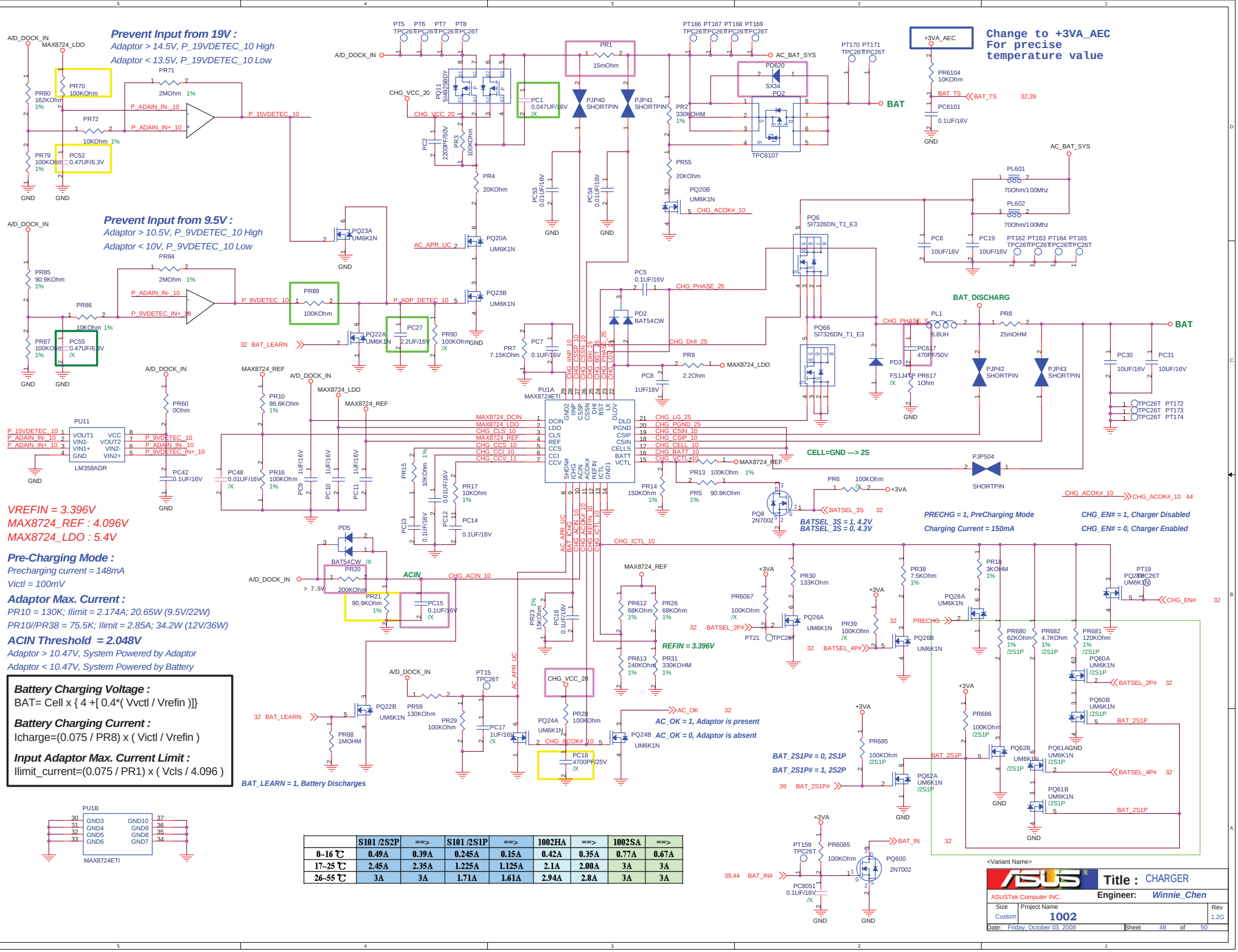

	S101 /2S2P	==>	S101 /2S1P	==>	1002HA	==>	1002SA	==>
0~16 ℃	0.49A	0.39A	0.245A	0.15A	0.42A	0.35A	0.77A	0.67A
17~25 ℃	2.45A	2.35A	1.225A	1.125A	2.1A	2.00A	3A	3A
26~55 ℃	3A	3A	1.71A	1.61A	2.94A	2.8A	3A	3A

<Variant Name>

EC KB3310 GPIO SETTING

Pin	Pin Name	Signal Name	Type	Note
1	GPIO00/GA20	A20GATE	O	
2	GPIO01/KBRST#	RC_IN#	O	
6	GPIO04	HOTKEY_SW0#	I	Internal pull high
13	GPIO05/PCIRST#	PCI_RST#	I	
14	GPIO07	HOTKEY_SW1#	I	Internal Pull Up
15	GPIO08	EXTSMI#	OD	10K ohm Pull Up to +3VSU
16	GPIO0A	LID_EC#	I	Internal pull high
17	GPIO0B/ESB_CLK	NC	O	
18	GPIO0C/ESB_DAT	NC	O	
19	GPIO0D	HOTKEY_SW2#	I	Internal pull high
20	GPIO0E/SCI#	KBC_SCI#	OD	10K ohm Pull Up to +3VSUS
21	GPIO0F/PWM0	BL_PWM_DA	O	
23	GPIO10/PWM1	BATSEL_4P#	O	Battery charging current setting
25	GPIO11/PWM2	PM_PWRBTN#	OD	Internal pull high in ICH
26	GPIO12/FANPWM1	FAN0_PWM	O	CPU Fan
27	GPIO13/FANPWM2	FAN1_PWM	O	VGA Fan
28	GPIO14/FANFB1	FAN0_TACH	I	CPU FanTach
29	GPIO15/FANFB2	FAN1_TACH	I	VGA FanTach
30	GPIO16/E51_TX	E51_TX	O	RS232 debug port
31	GPIO17/E51_RX	E51_RX	O	RS232 debug port
32	GPIO18	PWR_SW#	I	Internal pull high
34	GPIO19/PWM3	MAIL_LED#	O	
36	GPIO1A/NUMLED	NUM_LED#	O	
38	GPIO1D/CLKRUN#	NC	O	
39	GPIO20/KSO0/TP_TEST	KSO0	O	
40	GPIO21/KSO1/TP_PLL	KSO1	O	
41	GPIO22/KSO2	KSO2	O	
42	GPIO23/KSO3	KSO3	O	
43	GPIO24/KSO4	KSO4	O	
44	GPIO25/KSO5	KSO5	O	
45	GPIO26/KSO6	KSO6	O	
46	GPIO27/KSO7	KSO7	O	
47	GPIO28/KSO8	KSO8	O	
48	GPIO29/KSO9	KSO9	O	
49	GPIO2A/KSO10	KSO10	O	
50	GPIO2B/KSO11	KSO11	O	
51	GPIO2C/KSO12	KSO12	O	
52	GPIO2D/KSO13	KSO13	O	
53	GPIO2E/KSO14	KSO14	O	
54	GPIO2F/KSO15	KSO15	O	
55	GPIO30/KSI0	KSI0	I	Internal pull high
56	GPIO31/KSI1	KSI1	I	Internal pull high
57	GPIO32/KSI2	KSI2	I	Internal pull high
58	GPIO33/KSI3	KSI3	I	Internal pull high
59	GPIO34/KSI4	KSI4	I	Internal pull high
60	GPIO35/KSI5	KSI5	I	Internal pull high
61	GPIO36/KSI6	KSI6	I	Internal pull high
62	GPIO37/KSI7	KSI7	I	Internal pull high
63	GPI38/AD0	BAT_ICHG	I	
64	GPI39/AD1	BAT_CONFIG	I	Battery configureation
65	GPIO3A/AD2	BAT_SENSE	I	Battery Voltage Sensor
66	GPIO3B/AD3	BAT_TS	I	Battery Thermal Sensor
68	GPO3C/DA0	DOC	O	Trigger Clock Gen

Pin	Pin Name	Signal Name	Type	Note
70	GPO3D/DA1	LCD_BACKOFF#	O	
71	GPO3E/DA2	CLK_PWRSAVE#	O	
72	GPO3F/DA3	BAT_LL#	O	Battery Low Low
73	GPIO40	AC_OK	I	AC Adaptor Plug in
74	GPIO41	PM_RSMRST#	O	10K pull down to GND
75	GPI42	BAT_IN	I	
76	GPI43	CLRTC_EC	I	
77	GPIO44/SCL1	SMB0_CLK	I/OD	4.7K pull high to +3VA_EC
78	GPIO45/SDA1	SMB0_DAT	I/OD	4.7K pull high to +3VA_EC
79	GPIO46/SCL2	SMB1_CLK	I/OD	10K pull high to +3V
80	GPIO47/SDA2	SMB1_DAT	I/OD	10K pull high to +3V
81	GPIO48/KSO16	KB pin 28	I	for KB type detection
82	GPIO49/KSO17	KB pin 27	I	for KB type detection
83	GPIO4A/PSCLK1	AUO_SCL	O	for AUO, default H at S0
84	GPIO4B/PSDAT1	AUO_SDA	O	for AUO, default L at S0
85	GPIO4C/PSCLK2	AUO_CSB	O	for AUO, default H at S0
86	GPIO4D/PSDAT2	LVDD_EN	I	for AUO 7" Panel
87	GPIO4E/PSCLK3	TP_CLK	I/OD	10K pull high to +3V
88	GPIO4F/PSDAT3	TP_DAT	I/OD	10K pull high to +3V
89	GPIO50/SELIO#	BATSEL_3S	O	Battery series, H:3S, L:4S
90	GPIO52/E51_CS#	CHG_LED_UP#	O	
91	GPIO53/CAPLED	CAP_LED#	O	
92	GPIO54	PWR_LED_UP	O	
93	GPIO55/SCRLED	SCRL_LED#	O	
95	GPIO56	PWR4G_SW#	I	Internal pull high
97	GPXOA00/SDICS#	SPI_MODE#	O	4.7K pull down to GND
98	GPXOA01/SDICLK	SUSC_ON	O	
99	GPXOA02/SDIDO	VSUS_ON	O	
100	GPXOA03	CPU_VRON	O	
101	GPXOA04	SUSB_ON	O	
102	GPXOA05	ICH_PWROK	O	
103	GPXOA06	VOLT_CTRL	O	
104	GPXOA07	CHG_EN#	O	Battery charging enabled
105	GPXOA08	PRECHG	O	
106	GPXOA09	SPI_WP#	O	
107	GPX0A10	OP_SD#	O	Audio OP
108	GPXOA11	BAT_LEARN	O	
109	GPXID0/SDIDI	BATSEL_2P#	O	Battery parallel, H:1P, L:2P~3P
110	GPXID1	NC	O	
112	GPXID2	THRO_CPU	O	Active if CPU temperature over spec
114	GPXID3	SUSB#	I	100K pull down to GND
115	GPXID4	SUSC#	I	100K pull down to GND
116	GPXID5	CPUPWR_GD	I	Pull high to +3V
117	GPXID6	VSUS_GD	I	
118	GPXID7	NC	O	
121	GPIO57	INTERNET#	I	Internal pull high
126	GPIO57/SPICLK	SPI_CLK	O	
127	GPIO59/TEST_CLK	NC	O	

EC KB3310 Other Pin SETTING

Pin	Pin Name	Signal Name	Type	Note
3	SERIRQ	INT_SERIRQ	I/OD	10K pull high to +3V
4	LFRAME#	LPC_FRAME#	I	
5	LAD3	LPC_AD3	I/O	
7	LAD2	LPC_AD2	I/O	
8	LAD1	LPC_AD1	I/O	
9	VCC	+3VA_EC	P	
10	LAD0	LPC_AD0	I/O	
11	GND	GND	P	
12	PCICLK	CLK_PCI_EC	I	
22	VCC	+3VA_EC	P	
24	GND	GND	P	
33	VCC	+3VA_EC	P	
35	GND	GND	P	
37	ECRST#	EC_RST#	I	100K pull high to +3VA_EC
67	AVCC	+3VACC	P	
69	AGND	AGND	P	
94	GND	GND	P	
96	VCC	+3VA_EC	P	
111	VCC	+3VA_EC	P	
113	GND	GND	P	
119	RD#/SPIDI	SPI_SO	I	
120	WR#/SPIDO	SPI_SI	O	
112	XCLKI	32KXCLKI	I	
123	XCLKO	32KXCLKO	O	
124	V18R	V18R	P	Reserved 1uF to GND
125	VCC	+3VA_EC	P	
128	SPICS#/SELMEM#	SPI_CE#	O	

<Variant Name>

ASUSTek Computer INC.

Title : EC Pin Define

Engineer: Satan He

Size	Project Name	Rev
A3	1002	1.3G

Date: Friday, October 03, 2008 Sheet 49 of 50

<Variant Name>

Title : History

ASUSTek Computer INC.

Engineer: Satan He

Size	Project Name	Rev
A3	1002	1.3G

Date: Friday, October 03, 2008 Sheet 50 of 50

www.s-manuals.com