IH61X-MHS V7.0(Model name : H61MHV) 半固 + HDMI + Gbe LAN

IH61X-MHS V7.1(Model name : H61MHV) 全固 + HDMI + Gbe LAN

IH61Y-MHS V7.0(Model name : H61MGV) 半固 + Gbe LAN

IH61Z-MHS V7.0(Model name : H61MLC2) 半固 + 10/100M LAN

PAGE	CONTENTS
1	INDEX
2	BLOCK DIAGRAM
3	POWER DELIVERY
4	CPU PCIEX16/DMI/FDI
5	CPU DDR CHANNEL A
6	CPU DDR CHANNEL B
7	CPU MISC
8	CPU POWER & GND
9	DDR3 DIMMA1/A2
10	DDR3 DIMMB1/B2
11	PCH PCI
12	PCH DMI/PCIE/USB
13	PCH CLINK/SATA/CPU HOST
14	PCH LPC/HDA/SPI/MISC
15	PCH NVRAM & FDILINK
16	PCH VGA/DISPLAY PORT
17	PCH CLOCK BUFFER
18	PCH POWER
19	PCH GND
20	SPI ROM/BAT
21	PCIEX16 SLOT
22	PCIEX1 SLOT
23	VGA CONNECTOR
24	HDMI CONNECTOR
25	AUDIO CODEC ALC662CG
26	AUDIO CONNECTOR
27	LAN RTL8111F/8105E
28	SUPERIO ITE IT8772E
29	SUPERIO PS2/COM
30	SUPERIO FAN CONTROL
31	USB PORT
32	24PIN POWER CONN&FP
33	RESUME RESET LOGIC
34	ACPI POWER CONTROL
35	LINEAR POWER
36	MEMORY DC-DC Conver
37	VTT DC-DC Conver
38	VCORE VREG1
39	VCORE VREG2
40	OVER VOLTAGE
41	BOM

CPU:

Intel Sandy/Ivy Bridge processors in LGA1155 Package 95W

System Chipset:

Cugar Point H61

Main Memory:

Dual Channel/DDR-III*2(Max 16GB) 1066/1333

DDR3-1600 /1333 /1066 /800

Onboard Device:

Super I/O:IT8772E

LAN:REALTEK 8111F/8105E

HD Codec:ALC662CG 3 jacks

Power solution:

CPU Voltage Regulators:2phase by ISL6363

AXG voltage Regulators:1phase by ISL6363

VTT voltage Regulators:1Phase by FP6326

DDR voltage Regulators:1Phase by FP6326

Expansion Slots:

PCI EXPRESS 16X SLOT*1

PCI EXPRESS 1X SLOT*1

REAR IO:

PS/2 KB/MS

VGA

2 layer USB2.0 Ports

2 layer USB2.0 + RJ-45 Ports

Audio Jackets

Front I/O:

SATA2 * 4

USB Header * 2

CPU /System1

Front Audio Header

COM1

IH61X-MHS V7.0 V.S V7.1

ACT1,ACT2,ACT3,ACT4,ACT5CT4,CT6,CT8MCT6

NETIN: 100UF 16V 5X11 2MM LR 6.3X5
BOM: 100UF 16V 5X11 2MM LR 6.3X5---電解
100UF-S 16V 6.3X5 5X11---固態

ECT4,ECT5CT2,CT3,CT6

NETIN: 1000UF 6.3V 8X12 6.3X9
BOM: 1000UF 6.3V 8X12 6.3X9---電解
560UF-S 6.3V 6.3X9 APAQ---固態

CT9,CT11MCT2

NETIN: 1000UF 6.3V 8X12 6.3X9
BOM: 1000UF 6.3V 8X12 6.3X9---電解
820UF-S 3V 6.3X9 APAQ---固態

IH61X-MHS V7.0 V.S IH61Y-MHS V7.0

ALL Page 24 comonent N/I
Page 23 GF1,GC8 N/I

IH61X-MHS V7.0 V.S IH61Z-MHS V7.0

Change Page 27 LAN to 8105E
ALL Page 24 comonent N/I
Page 23 GF1,GC8 N/I

『BIOSTAR'S PROPRIETARY INFORMATION』
『Any unauthorized use, reproduction, duplication, or disclosure of this document will be subject to the applicable civil and/or criminal penalties.』

映泰股份有限公司 BIOSTAR GROUP

Title	INDEX	
Size: Custom	Document Number: IH61X-MHS	Rev: 7.0
Date: Tuesday, April 10, 2012	Sheet 1 of 41	

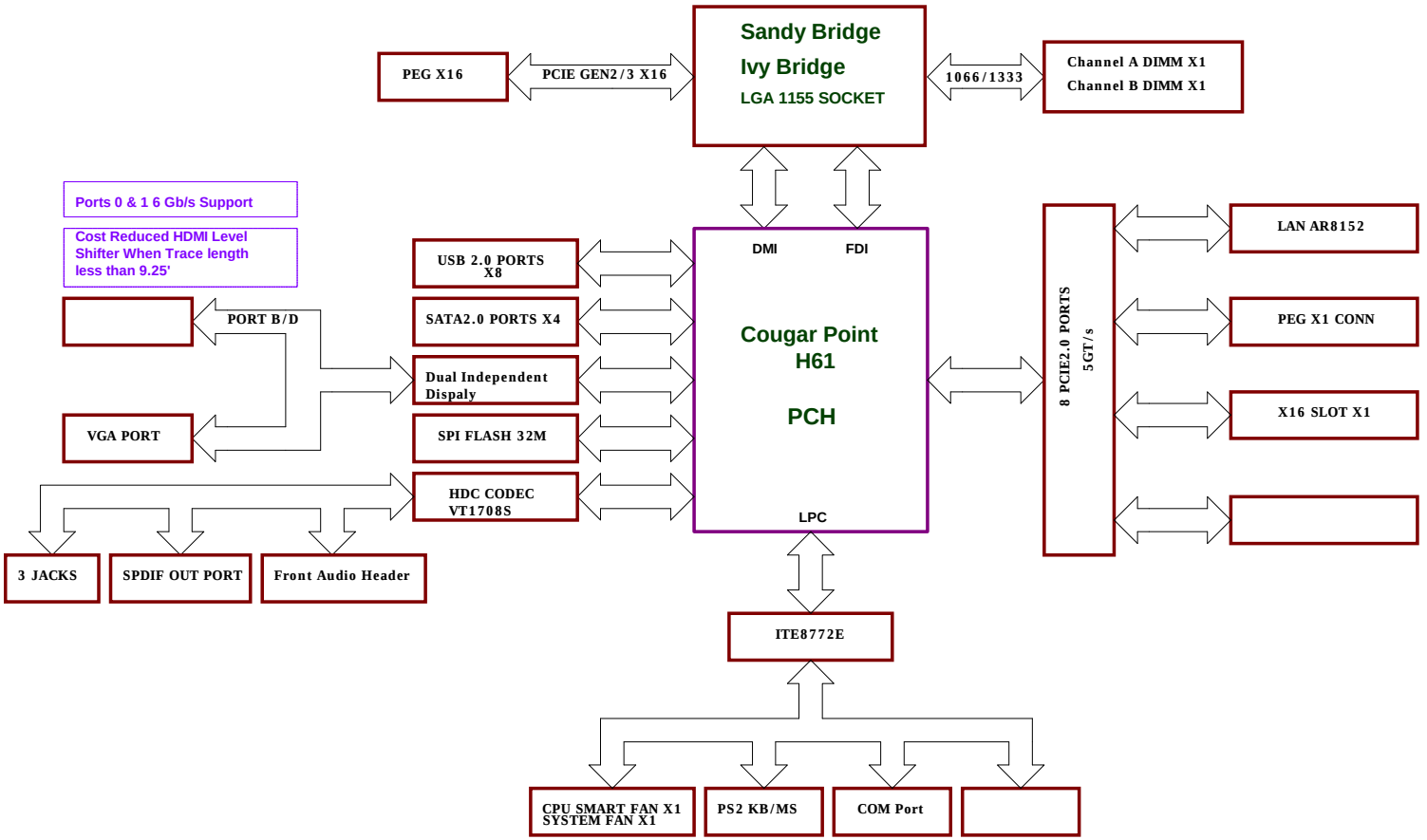

Feature Set		SKU Name(s)					
		Q67	Q65	B65	H67	P67	H61
PCI Express* 2.0 Ports		8	8	8	8	8	6[9]
PCI Interface		Yes	Yes	Yes	No[10]	No[10]	No[10]
USB 2.0 Ports		14	14	12[6]	14	14	10[7]
Total number of SATA ports		6	6	6	6	6	4
• SATA Ports (6 Gb/s, 3 Gb/s, and 1.5 Gb/s)		2[4]	1[5]	1[5]	2[4]	2[4]	0
• SATA Ports (3 Gb/s and 1.5 Gb/s only)		4	5	5	4	4	4[8]
HDMI/DVI/VGA/DisplayPort*/eDP*		Yes	Yes	Yes	Yes	No	Yes
Integrated Graphics Support with PAVP		Yes	Yes	Yes	Yes	No	Yes
Intel® Rapid Storage Technology	AHCI	Yes	Yes	Yes	Yes	Yes	No
	RAID 0/1/5/10 Support	Yes	No	No	Yes	Yes	No
Intel® AT		Yes	Yes	No	No	No	No
Intel® AMT 7.0		Yes	No	No	No	No	No
Intel® Remote PC Assist Technology - Proactive		Yes	No	Yes	No	No	No
Intel® Remote PC Assist Technology - Reactive		No	No	Yes	Yes	No	No

映泰股份有限公司
BIOSTAR GROUP

Title: BLOCK DIAGRAM

Size: Custom | Document Number: IH61X-MHS | Rev: 7.0

Date: Tuesday, April 10, 2012 | Sheet 2 of 41

ver:0.7

1. *Schematic change from IH61W VER:0.8*
2. *add HDMI CONN(passive type)* (PAGE.16/24)
3. *Change LAN-AR8152 to RTL8111F/8105E* (PAGE.27)
4. *Change Codec VT1708S to ALC662* (PAGE.25)

ver:0.7-->7.0

1. *Schematic change from IH61W VER:0.8*
2. *add add AR36/AR37 22K 0402,AR34 20K 0402, AR35 39.2K 0402 for front AUDIO sense can't wo* (PAGE.26)
3. *Change BOM for LAN-AR8111E to RTL8111F* (PAGE.27)

映泰股份有限公司
BIOSTAR GROUP

Title	CHANGE LIST		
Size B	Document Number IH61X-MHS		Rev 7.0
Date: Tuesday, April 10, 2012	Sheet 3 of 41		

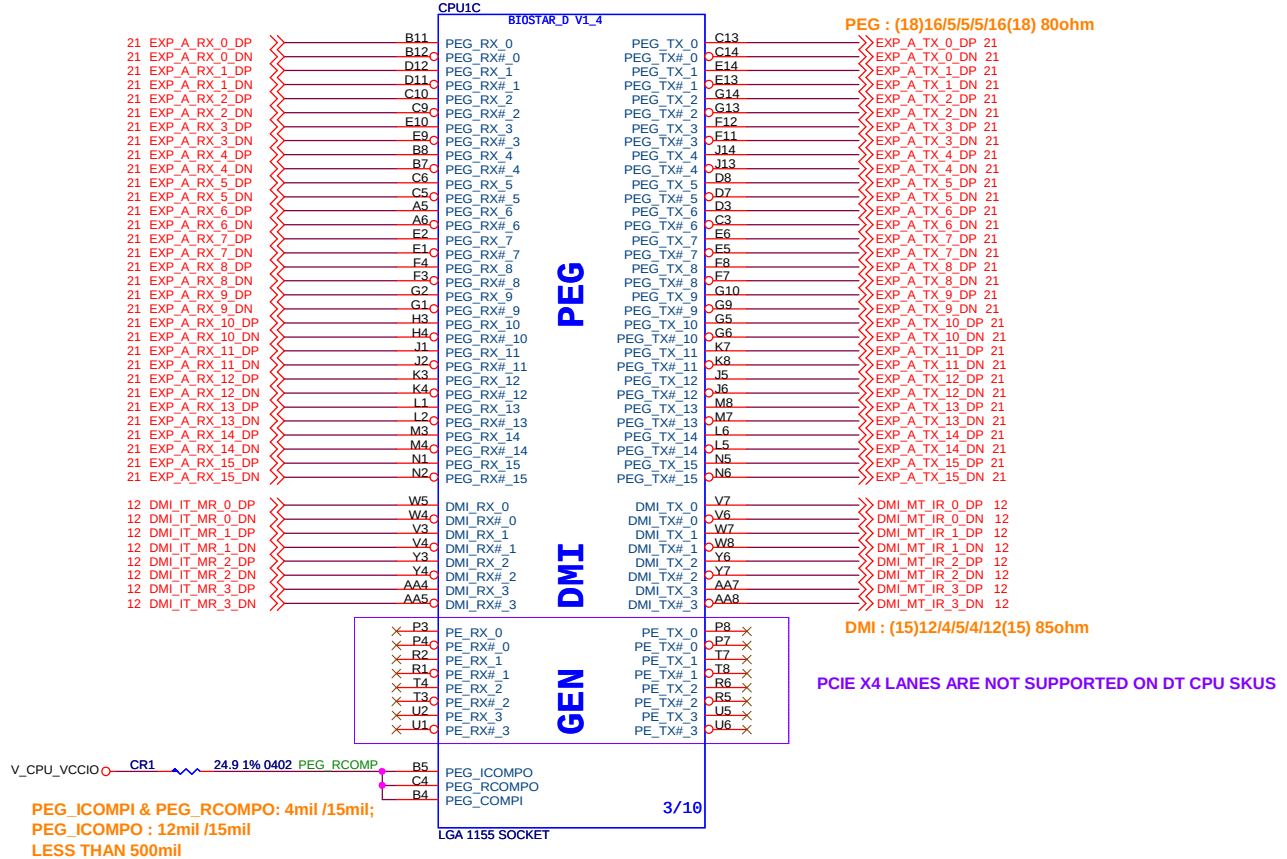

映泰股份有限公司
BIOSTAR GROUP

Title	CPU PCIEX16/DMI/FDI	
Size B	Document Number IH61X-MHS	Rev 7.0
Date: Tuesday, April 10, 2012	Sheet 4 of 41	

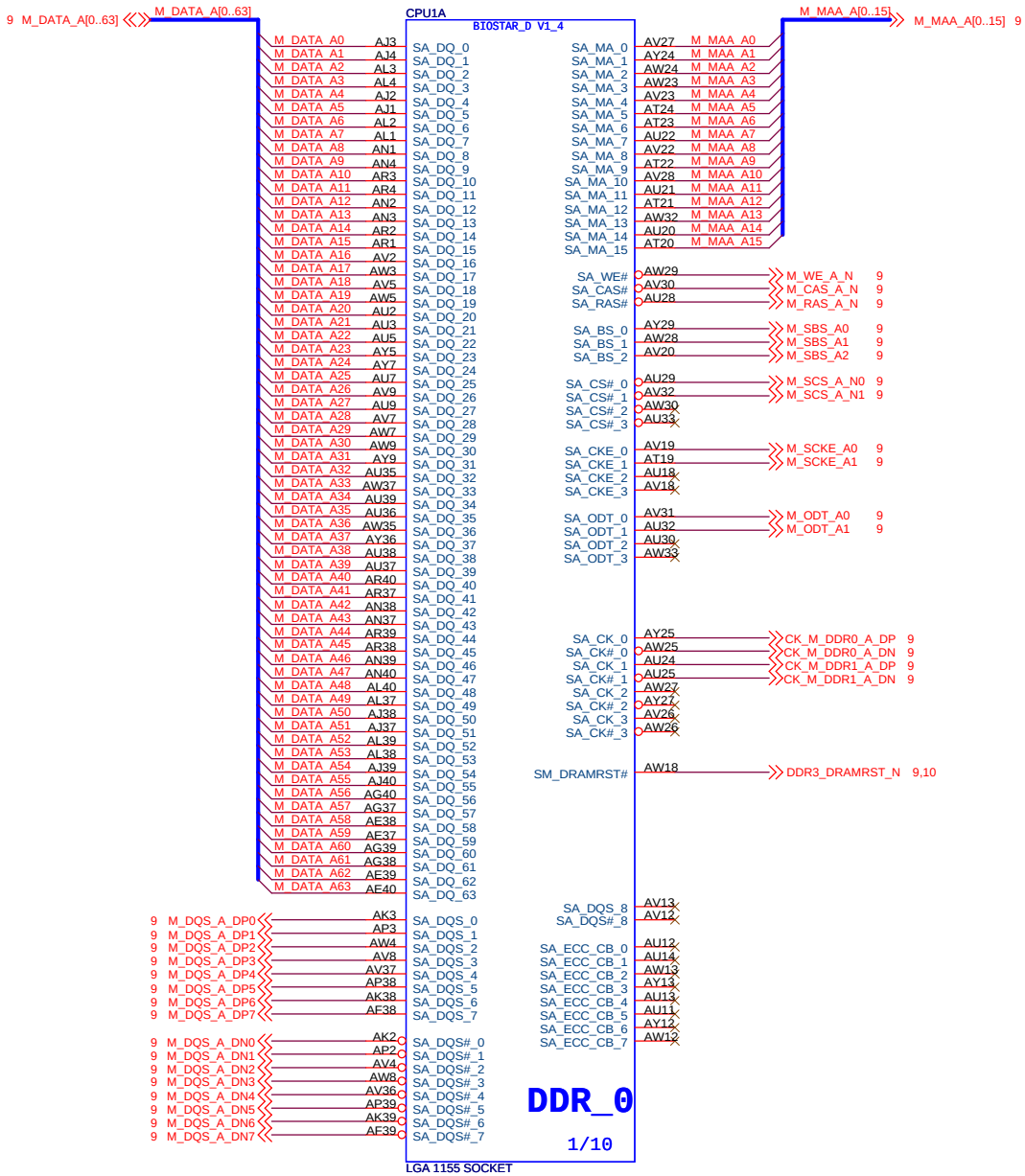

映泰股份有限公司
BIOSTAR GROUP

Title	CPU DDR CHANNEL A	
Size B	Document Number IH61X-MHS	Rev 7.0
Date: Tuesday, April 10, 2012	Sheet 5 of 41	

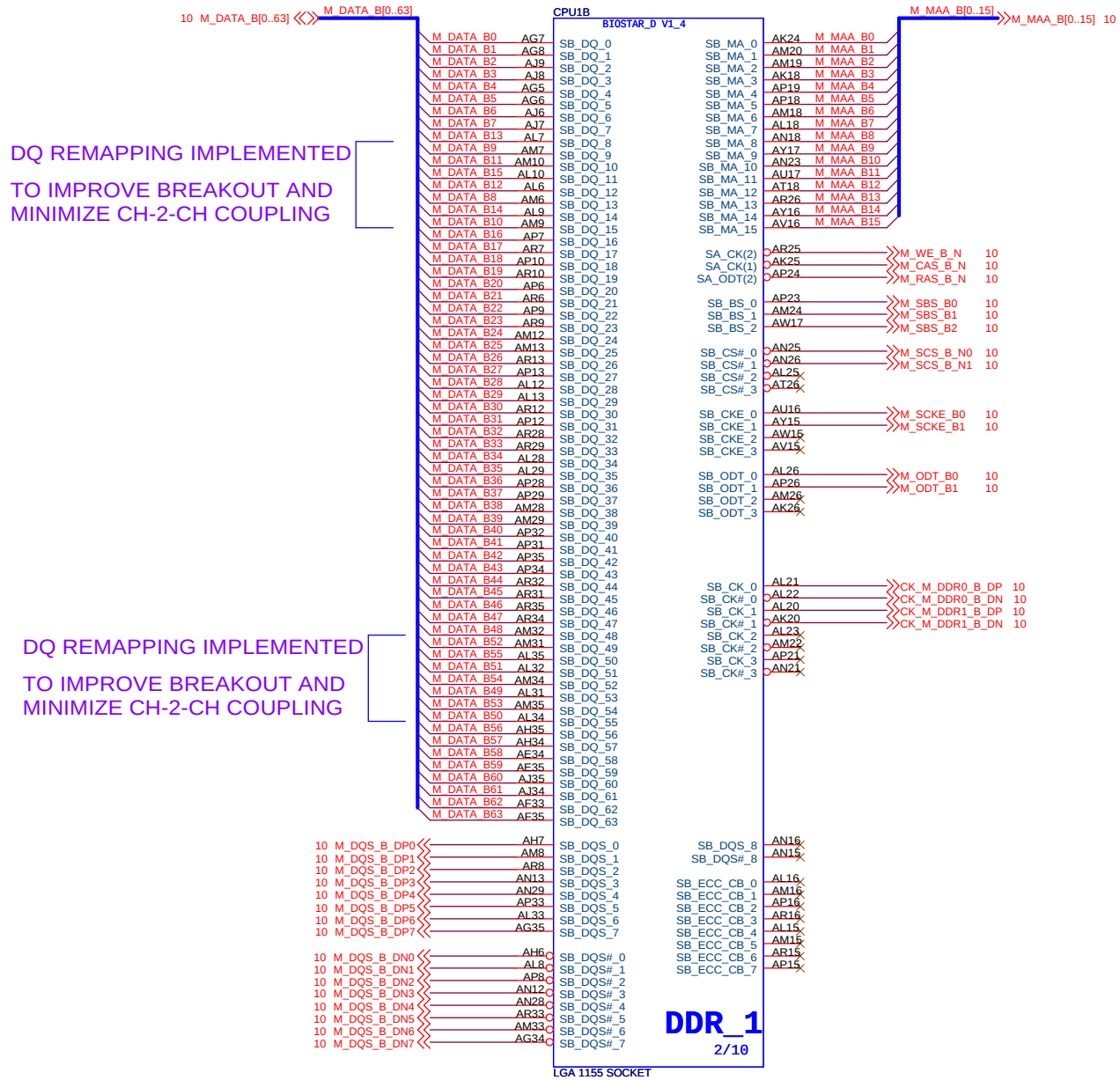

Title	CPU DDR CHANNEL A
Size	B
Document Number	IH61X-MHS
Rev	7.0
Date:	Tuesday, April 10, 2012
Sheet	6 of 41

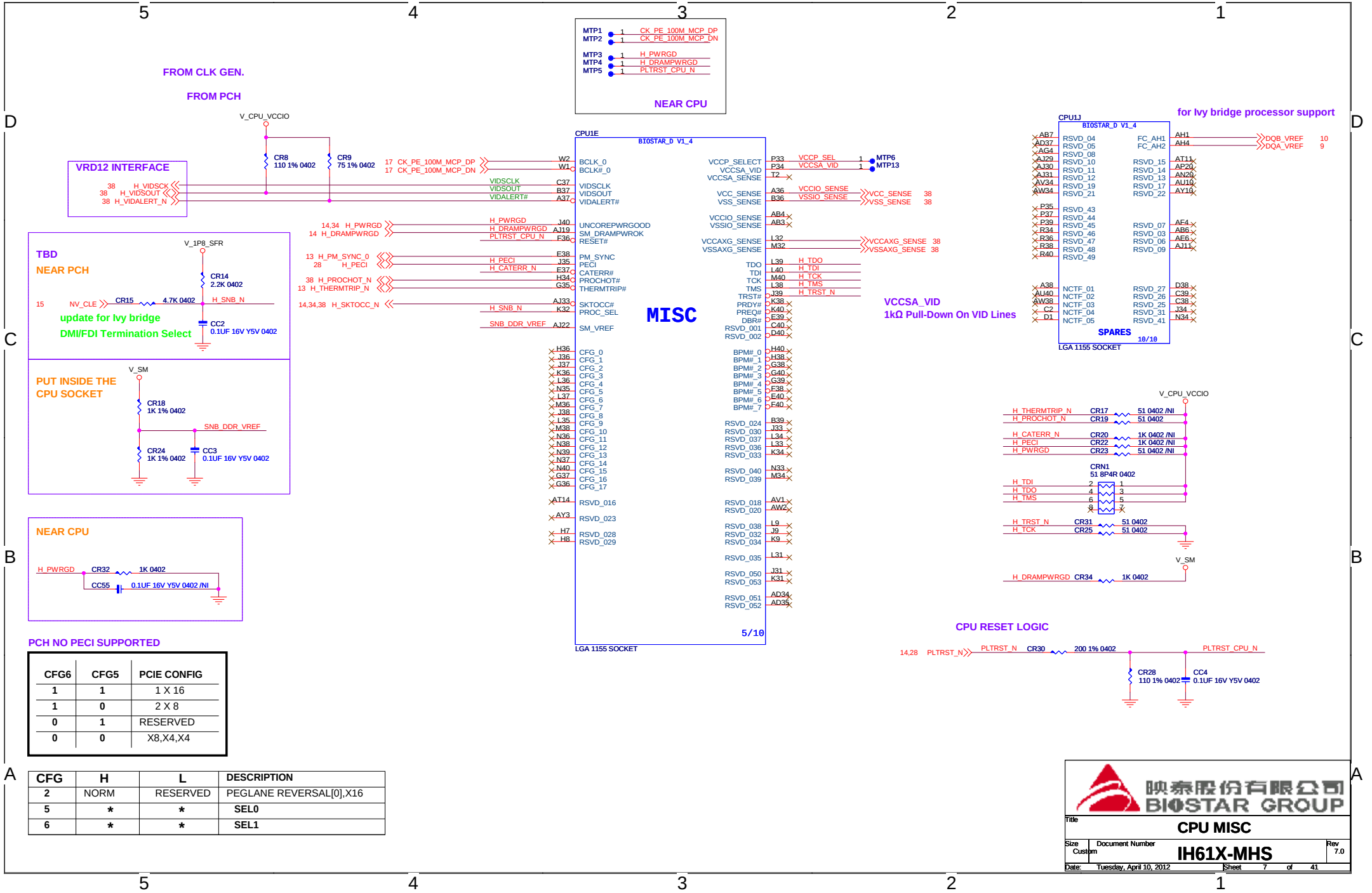

CFG6	CFG5	PCIE CONFIG
1	1	1 X 16
1	0	2 X 8
0	1	RESERVED
0	0	X8,X4,X4

CFG	H	L	DESCRIPTION
2	NORM	RESERVED	PEGLANE REVERSAL[0],X16
5	*	*	SEL0
6	*	*	SEL1

映泰股份有限公司 BIOSTAR GROUP

Title	CPU MISC	
Size: Custom	Document Number: IH61X-MHS	Rev: 7.0
Date: Tuesday, April 10, 2012	Sheet 7 of 41	

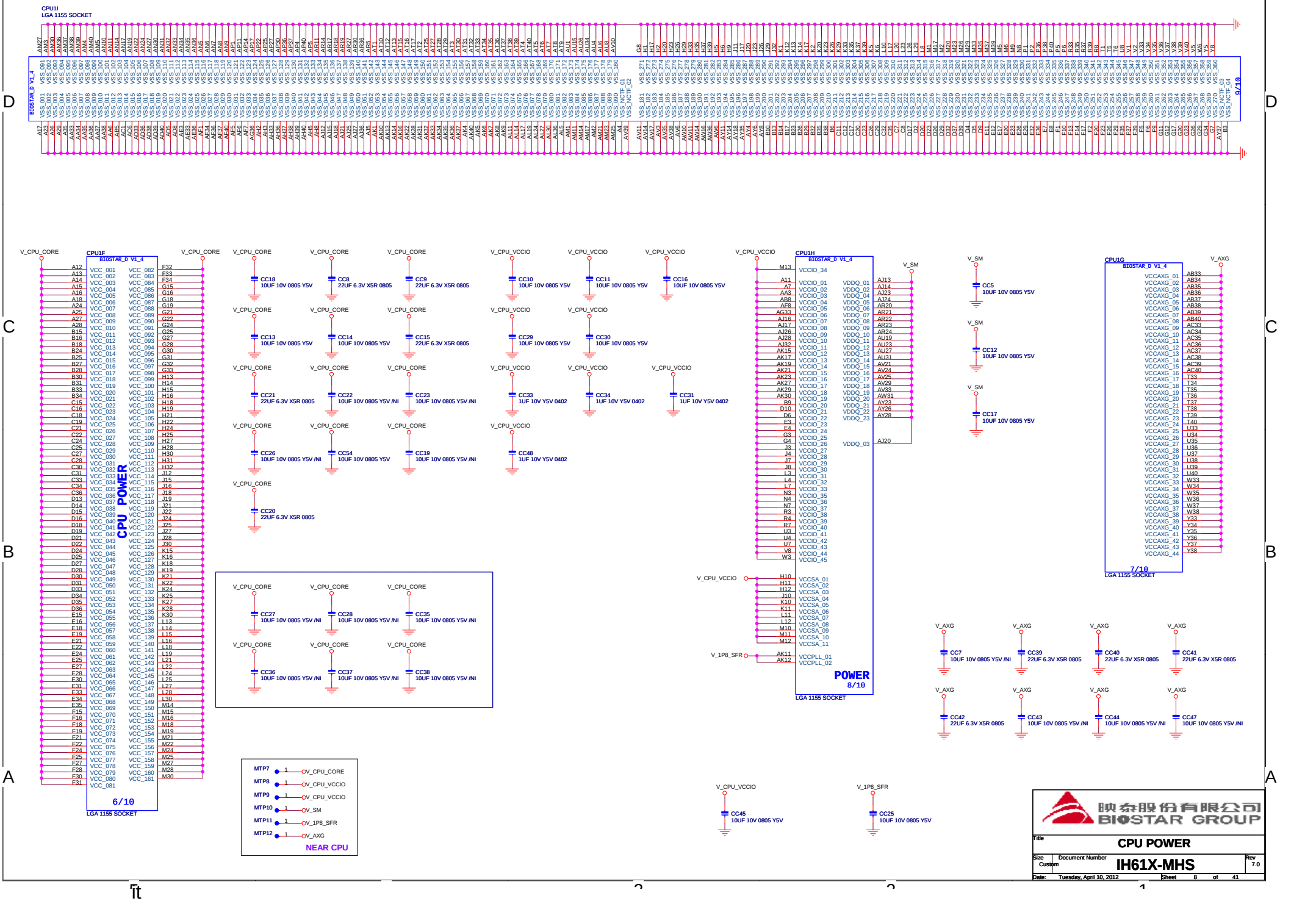
CPU1I
LGA 1155 SOCKET
BIOSTAR_D V1_4
CPU1F
BIOSTAR_D V1_4
CPU POWER
6/10
LGA 1155 SOCKET
V_CPU_CORE
V_CPU_VCCIO
CC18 10UF 10V 0805 Y5V
CC8 22UF 6.3V X5R 0805
CC9 22UF 6.3V X5R 0805
CC10 10UF 10V 0805 Y5V
CC11 10UF 10V 0805 Y5V
CC16 10UF 10V 0805 Y5V
CC13 10UF 10V 0805 Y5V
CC14 10UF 10V 0805 Y5V
CC15 22UF 6.3V X5R 0805
CC29 10UF 10V 0805 Y5V
CC30 10UF 10V 0805 Y5V
CC21 22UF 6.3V X5R 0805
CC22 10UF 10V 0805 Y5V /NI
CC23 10UF 10V 0805 Y5V /NI
CC33 1UF 10V Y5V 0402
CC34 1UF 10V Y5V 0402
CC31 1UF 10V Y5V 0402
CC26 10UF 10V 0805 Y5V /NI
CC54 10UF 10V 0805 Y5V
CC19 10UF 10V 0805 Y5V /NI
CC48 1UF 10V Y5V 0402
CC20 22UF 6.3V X5R 0805
CC27 10UF 10V 0805 Y5V /NI
CC28 10UF 10V 0805 Y5V /NI
CC35 10UF 10V 0805 Y5V /NI
CC36 10UF 10V 0805 Y5V /NI
CC37 10UF 10V 0805 Y5V /NI
CC38 10UF 10V 0805 Y5V /NI
MTP7
MTP8
MTP9
MTP10
MTP11
MTP12
V_CPU_CORE
V_CPU_VCCIO
V_CPU_VCCIO
V_SM
V_1P8_SFR
V_AXG
NEAR CPU
CPU1H
BIOSTAR_D V1_4
POWER
8/10
LGA 1155 SOCKET
V_SM
CC5 10UF 10V 0805 Y5V
CC12 10UF 10V 0805 Y5V
CC17 10UF 10V 0805 Y5V
CPU1G
BIOSTAR_D V1_4
7/10
LGA 1155 SOCKET
V_AXG
CC7 10UF 10V 0805 Y5V /NI
CC39 22UF 6.3V X5R 0805
CC40 22UF 6.3V X5R 0805
CC41 22UF 6.3V X5R 0805
CC42 22UF 6.3V X5R 0805
CC43 10UF 10V 0805 Y5V /NI
CC44 10UF 10V 0805 Y5V /NI
CC47 10UF 10V 0805 Y5V /NI
CC45 10UF 10V 0805 Y5V
CC25 10UF 10V 0805 Y5V
BIOSTAR GROUP
Title
CPU POWER
Size
Custom
Document Number
IH61X-MHS
Rev
7.0
Date: Tuesday, April 10, 2012
Sheet 8 of 41

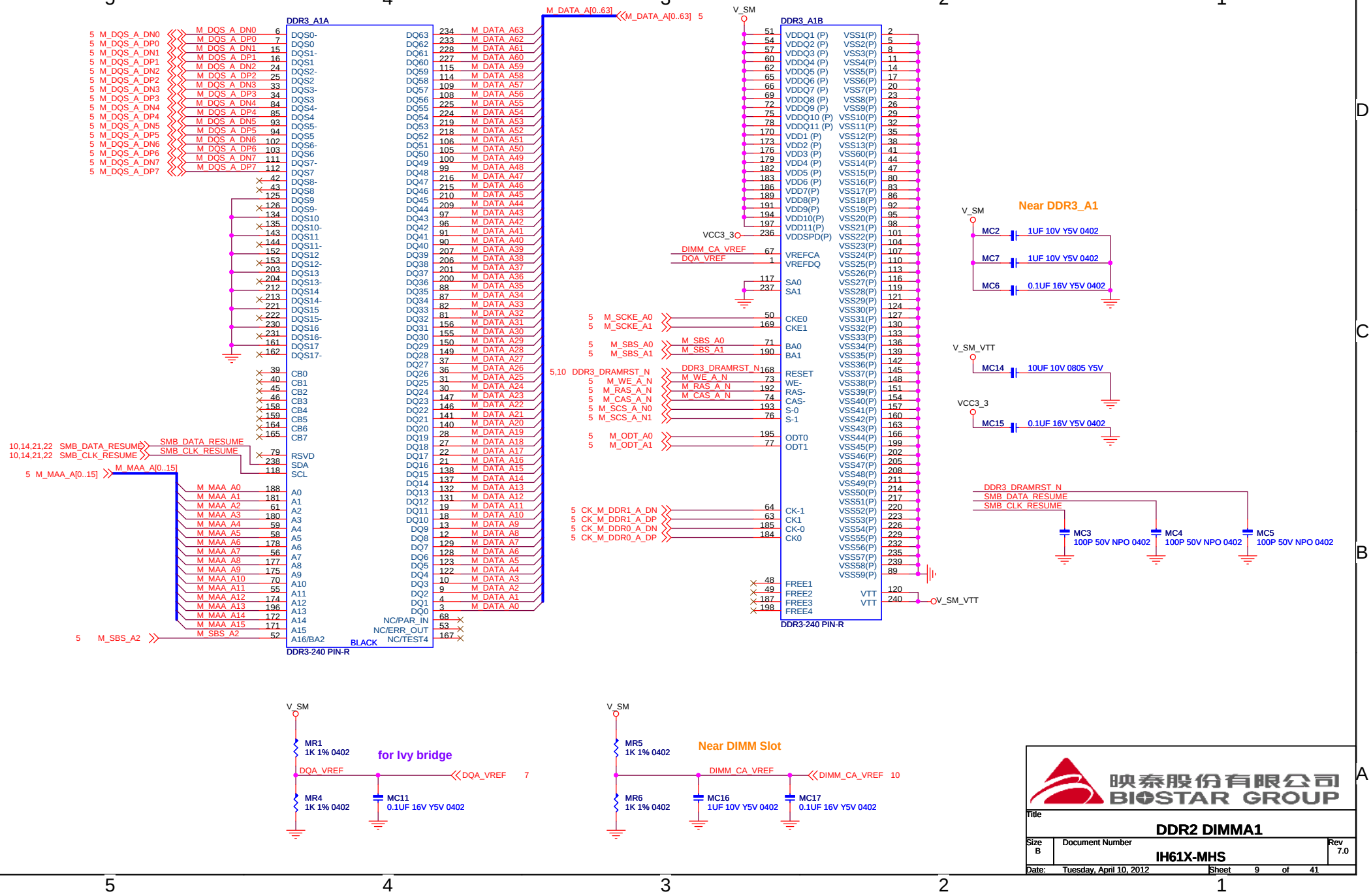

BIOSTAR GROUP 映泰股份有限公司

Title: DDR2 DIMMA1

Size	Document Number	Rev
B	IH61X-MHS	7.0

Date: Tuesday, April 10, 2012 Sheet 9 of 41

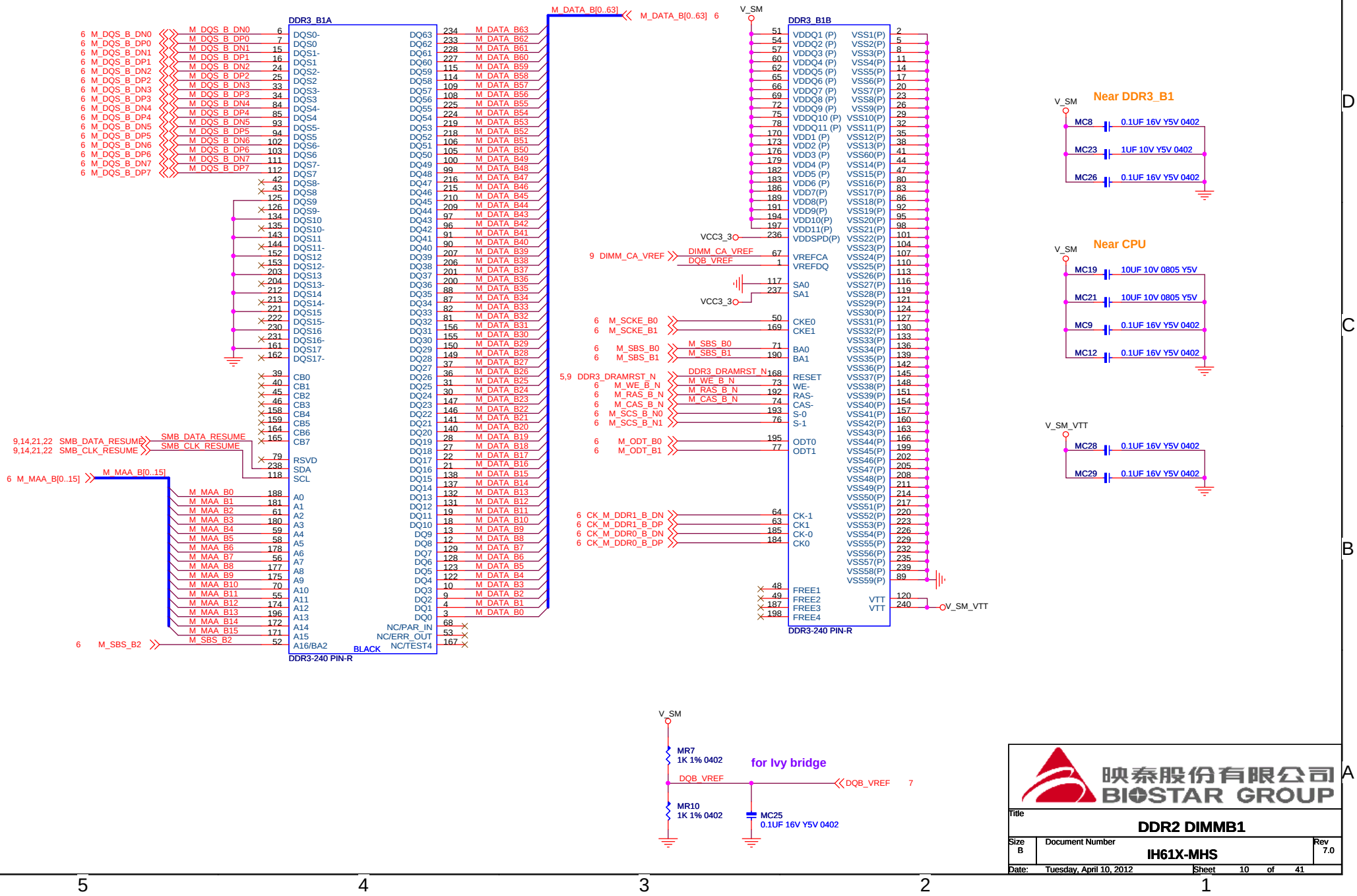
DDR3_B1A
DDR3_B1B
DDR3-240 PIN-R
BLACK
M_DATA_B[0..63]
M_MAA_B[0..15]
SMB_DATA_RESUME
SMB_CLK_RESUME
V_SM
VCC3_3
V_SM_VTT
DIMM_CA_VREF
DQB_VREF
DDR3_DRAMRST_N
Near DDR3_B1
MC8 0.1UF 16V Y5V 0402
MC23 1UF 10V Y5V 0402
MC26 0.1UF 16V Y5V 0402
Near CPU
MC19 10UF 10V 0805 Y5V
MC21 10UF 10V 0805 Y5V
MC9 0.1UF 16V Y5V 0402
MC12 0.1UF 16V Y5V 0402
MC28 0.1UF 16V Y5V 0402
MC29 0.1UF 16V Y5V 0402
MR7 1K 1% 0402
MR10 1K 1% 0402
for Ivy bridge
MC25 0.1UF 16V Y5V 0402
映泰股份有限公司
BIOSTAR GROUP
Title
DDR2 DIMMB1
Size B
Document Number
IH61X-MHS
Rev 7.0
Date: Tuesday, April 10, 2012
Sheet 10 of 41

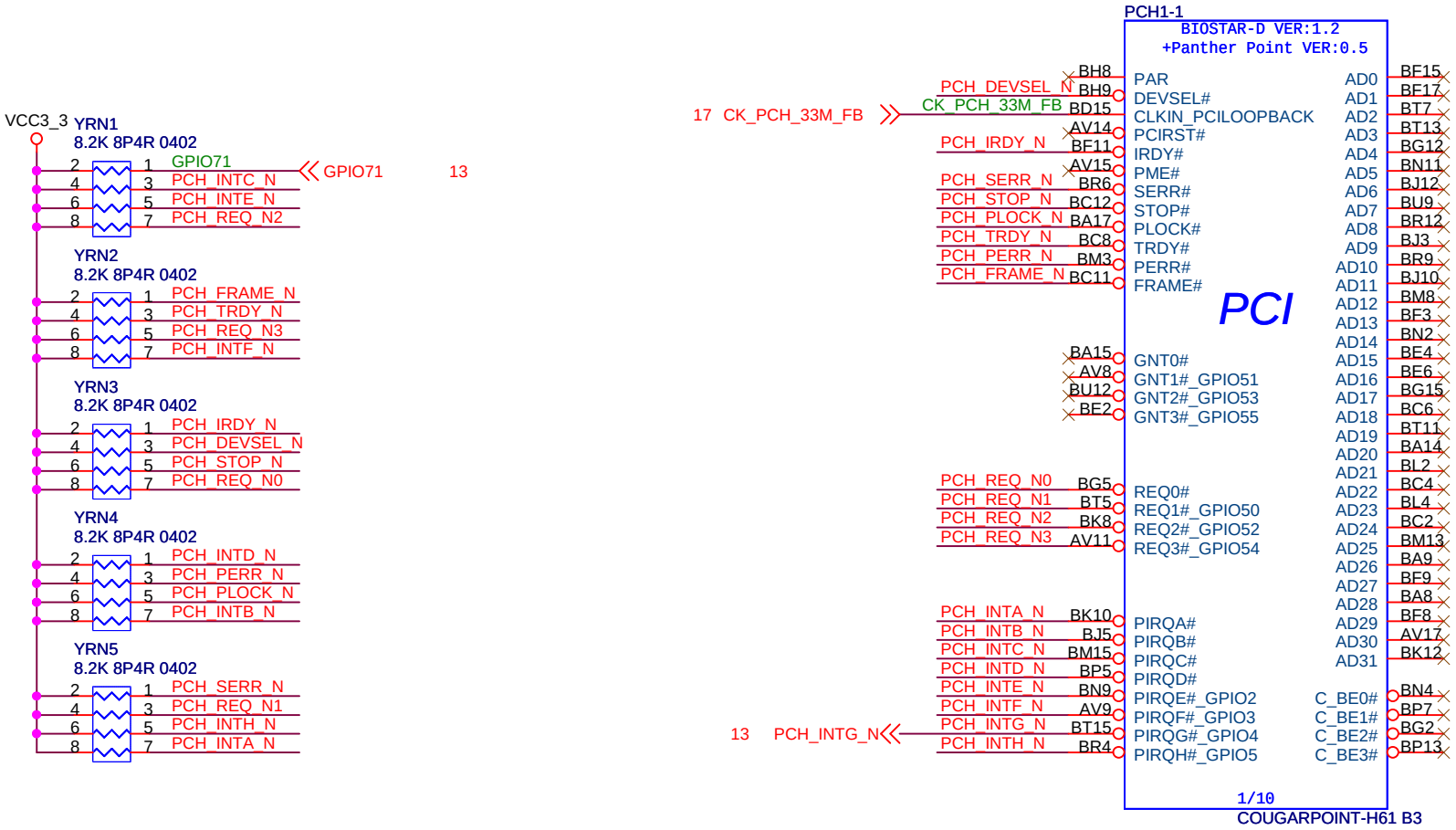

WEAK INTERNAL PULLOPS ON GNT*.DEFAULT SPI BOOT DEVICE

GNT1	GNT0/SATA1GP	BOOT DEVICE
0	0	LPC
0	1	NANO
1	0	PCI
1	1	SPI

映泰股份有限公司
BIOSTAR GROUP

Title	PCH PCI	
Size A	Document Number IH61X-MHS	Rev 7.0
Date: Tuesday, April 10, 2012	Sheet 11 of 41	

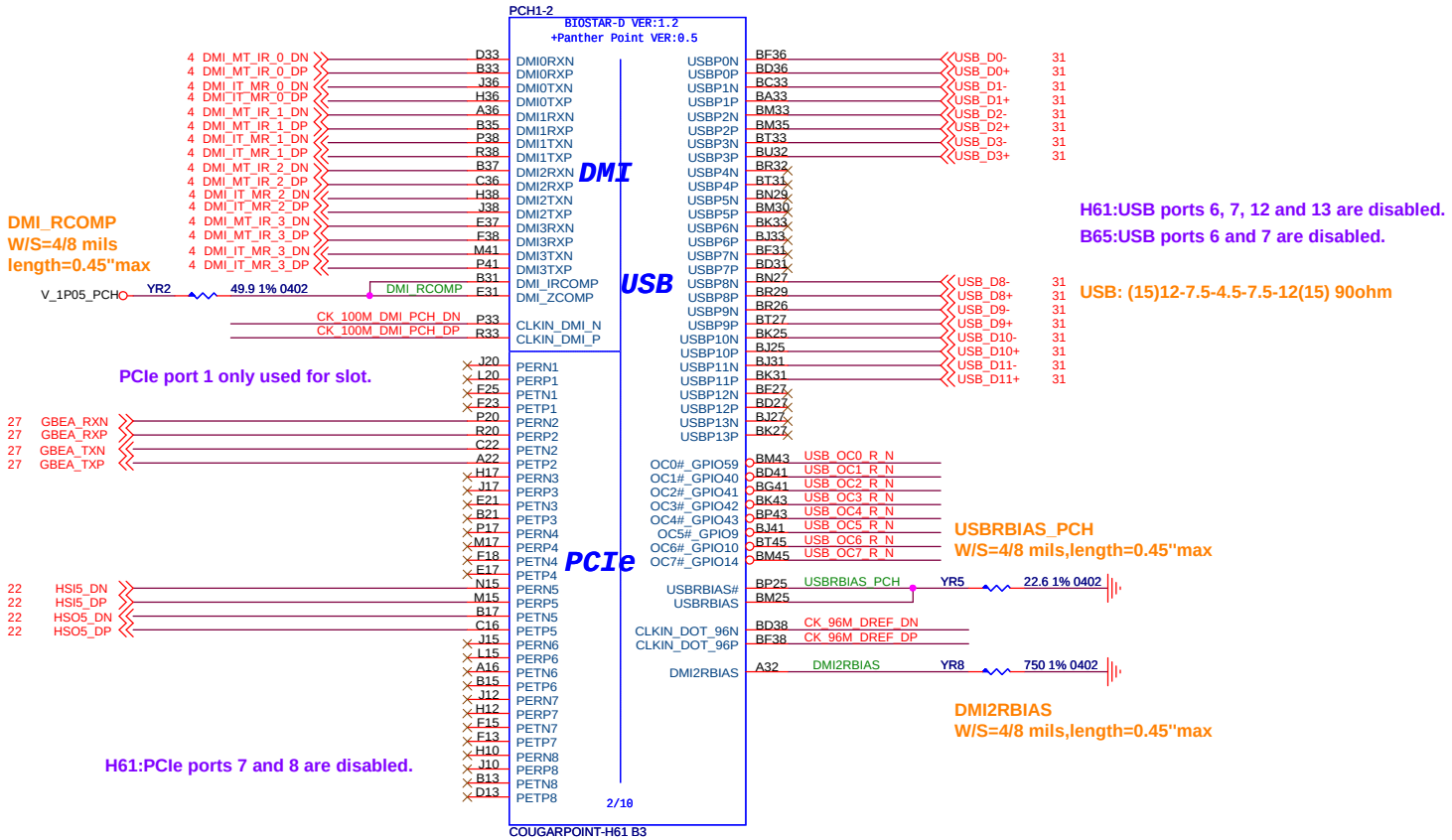

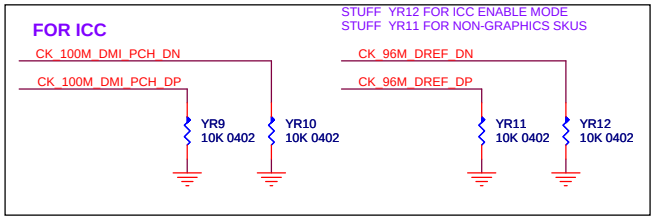

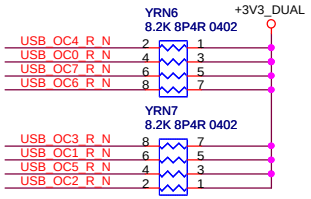

映泰股份有限公司
BIOSTAR GROUP

Title	PCH DMI/PCIE/USB		
Size B	Document Number IH61X-MHS		Rev 7.0
Date: Tuesday, April 10, 2012	Sheet 12 of 41		

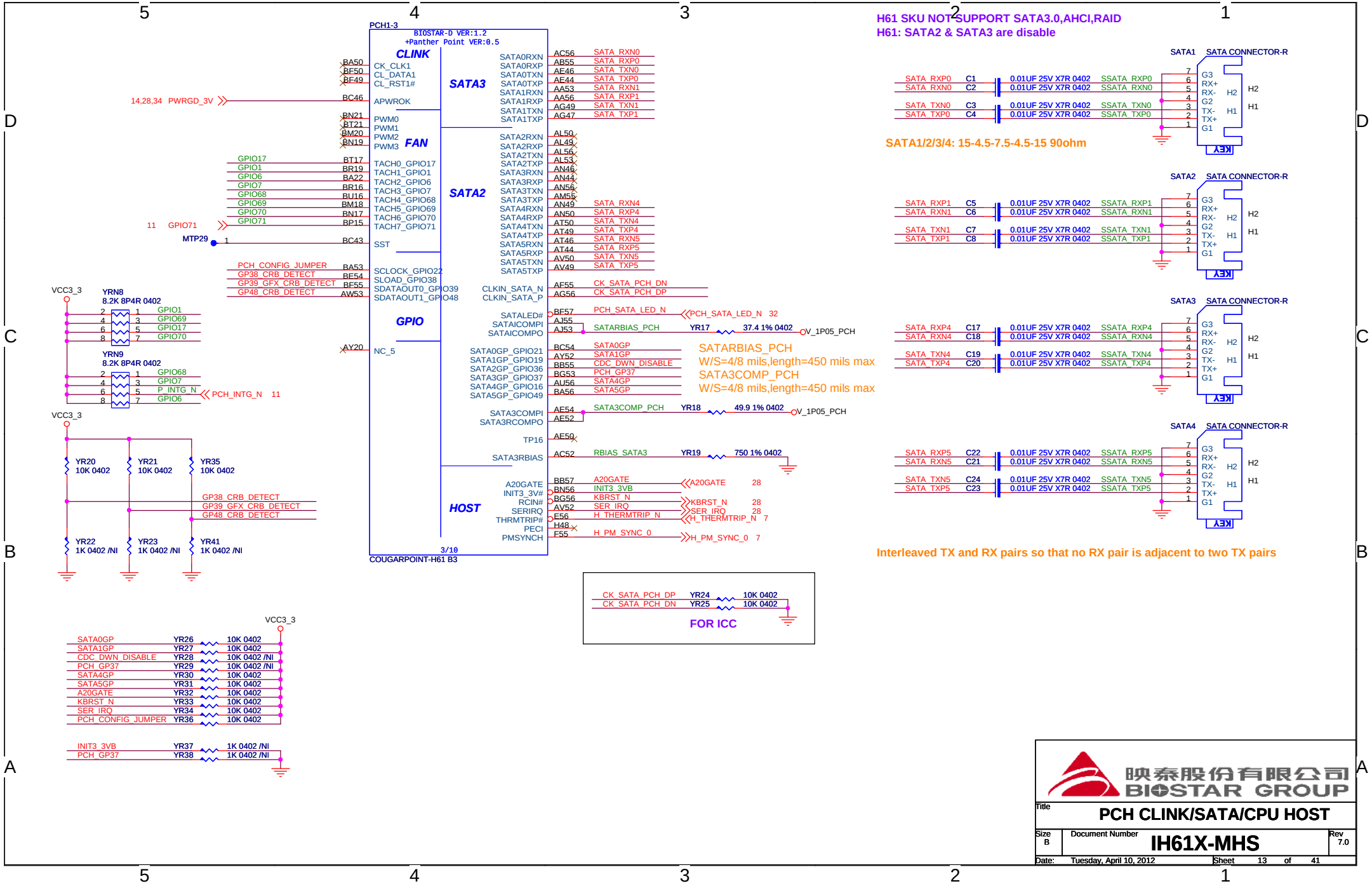

映泰股份有限公司 BIOSTAR GROUP

Title	PCH CLINK/SATA/CPU HOST		
Size B	Document Number IH61X-MHS		Rev 7.0
Date: Tuesday, April 10, 2012	Sheet 13 of 41		

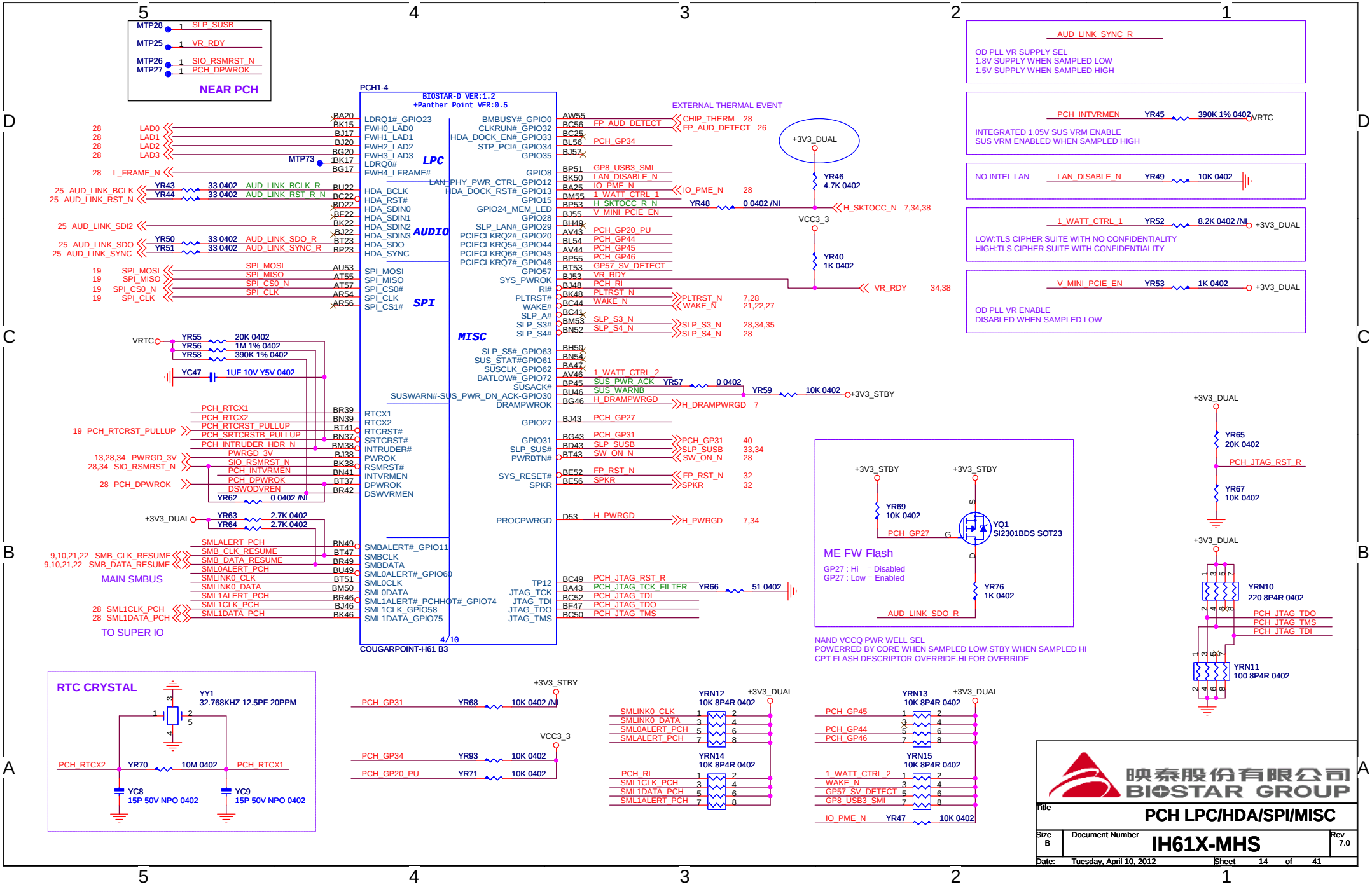
NEAR PCH
MTP28 SLP_SUSB
MTP25 VR_RDY
MTP26 SIO_RSMRST_N
MTP27 PCH_DPWROK
PCH1-4
BIOSTAR-D VER:1.2
+Panther Point VER:0.5
LPC
AUDIO
SPI
MISC
4/10
COUGARPOINT-H61 B3
EXTERNAL THERMAL EVENT
AUD_LINK_SYNC_R
OD PLL VR SUPPLY SEL
1.8V SUPPLY WHEN SAMPLED LOW
1.5V SUPPLY WHEN SAMPLED HIGH
PCH_INTVRMEN YR45 390K 1% 0402 VRTC
INTEGRATED 1.05V SUS VRM ENABLE
SUS VRM ENABLED WHEN SAMPLED HIGH
NO INTEL LAN
LAN_DISABLE_N YR49 10K 0402
1_WATT_CTRL_1 YR52 8.2K 0402 /NI +3V3_DUAL
LOW:TLS CIPHER SUITE WITH NO CONFIDENTIALITY
HIGH:TLS CIPHER SUITE WITH CONFIDENTIALITY
V_MINI_PCIE_EN YR53 1K 0402 +3V3_DUAL
OD PLL VR ENABLE
DISABLED WHEN SAMPLED LOW
ME FW Flash
GP27 : Hi = Disabled
GP27 : Low = Enabled
YQ1 SI2301BDS SOT23
NAND VCCQ PWR WELL SEL
POWERRED BY CORE WHEN SAMPLED LOW.STBY WHEN SAMPLED HI
CPT FLASH DESCRIPTOR OVERRIDE.HI FOR OVERRIDE
MAIN SMBUS
TO SUPER IO
RTC CRYSTAL
YY1 32.768KHZ 12.5PF 20PPM
YC8 15P 50V NPO 0402
YC9 15P 50V NPO 0402
YR70 10M 0402
YRN10 220 8P4R 0402
YRN11 100 8P4R 0402
YRN12 10K 8P4R 0402
YRN13 10K 8P4R 0402
YRN14 10K 8P4R 0402
YRN15 10K 8P4R 0402
Title
PCH LPC/HDA/SPI/MISC
Size B
Document Number
IH61X-MHS
Rev 7.0
Date: Tuesday, April 10, 2012
Sheet 14 of 41

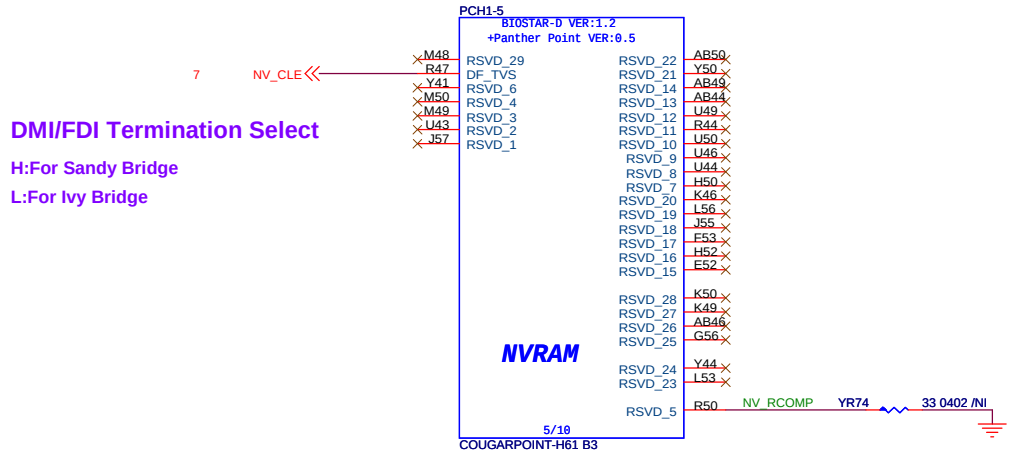

DMI/FDI Termination Select

H:For Sandy Bridge

L:For Ivy Bridge

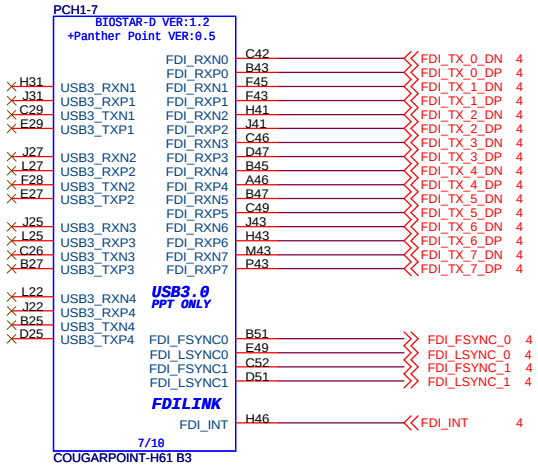

映泰股份有限公司
BIOSTAR GROUP

Title	PCH NVRAM & FDI LINK	
Size B	Document Number IH61X-MHS	Rev 7.0
Date: Tuesday, April 10, 2012	Sheet 15 of 41	

3.3V TOLERANT,HIGH ACTIVE

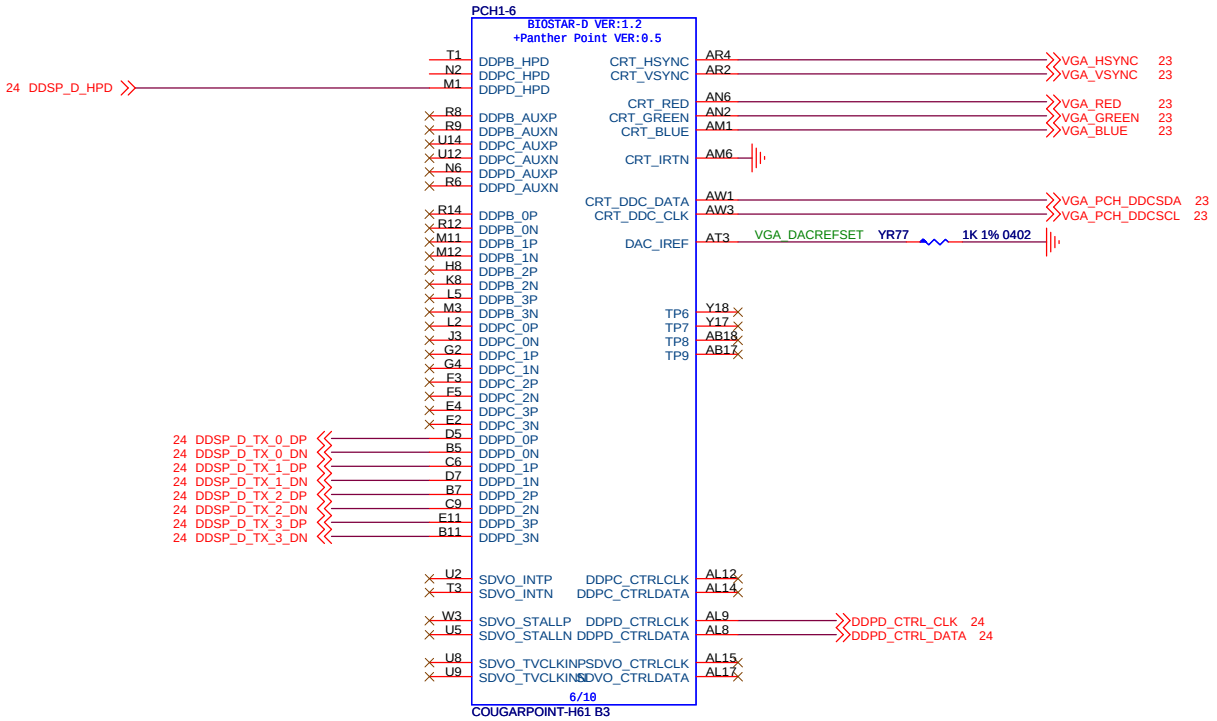

	FUNCTION
PORTB	DVI OR SDVO
PORTC	DISPLAY PORT
PORTD	HDMI/DVI/eDP

REMOVE LEVEL SHIFTER WHEN TRACE LENGHT LESS THAN 9.25 INCHES

If DisplayPort interface is not implemented, the Main Link, aux channel differential signals and HPD signals can be left as No Connects./DG108

映泰股份有限公司 BIOSTAR GROUP

Title: **PCH VGA/DISPLAY PORT**

Size	Document Number	Rev
B	IH61X-MHS	7.0

Date: Tuesday, April 10, 2012 Sheet 16 of 41

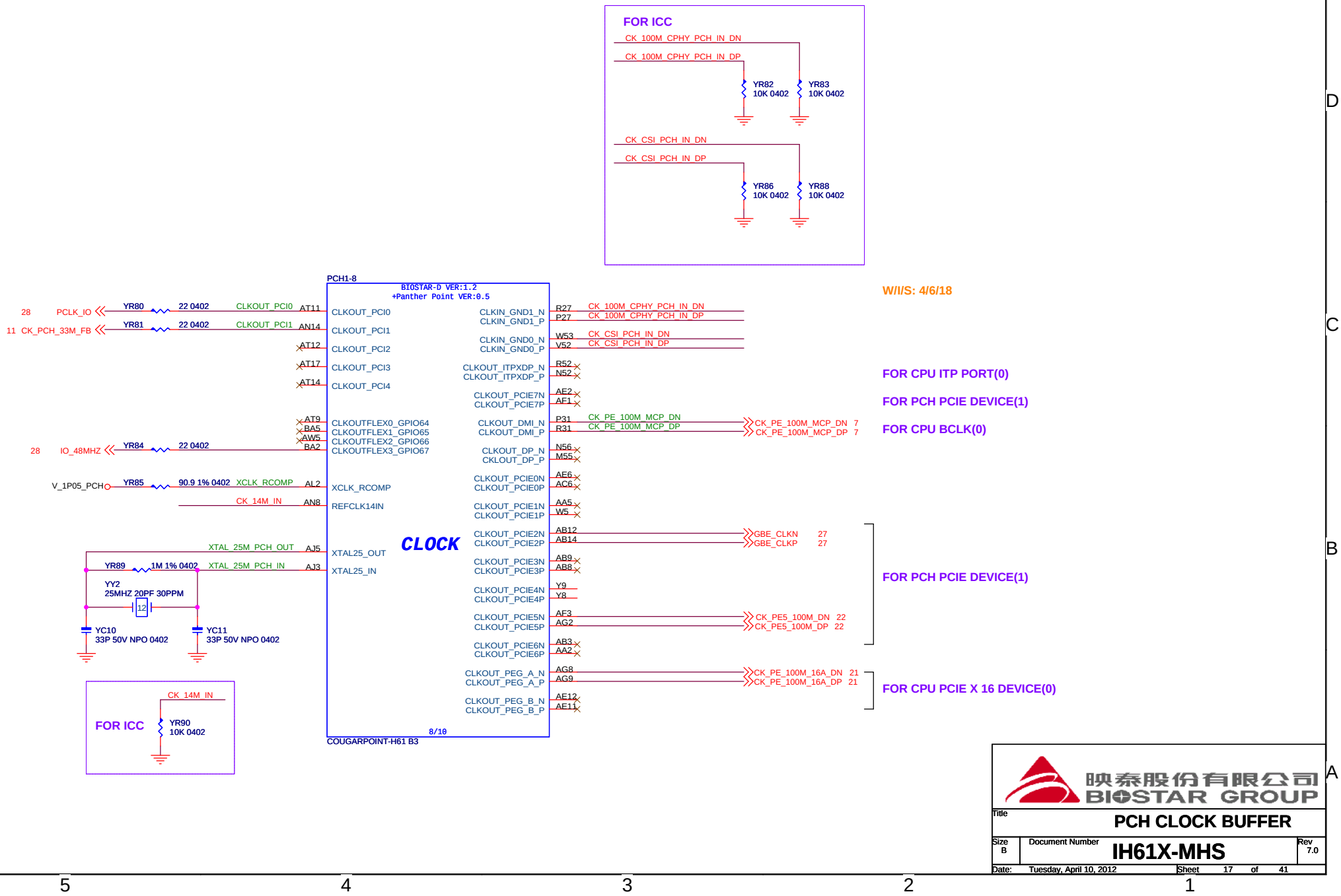

Title	PCH CLOCK BUFFER
Size	B
Document Number	IH61X-MHS
Rev	7.0
Date:	Tuesday, April 10, 2012
Sheet	17 of 41

映泰股份有限公司 BIOSTAR GROUP

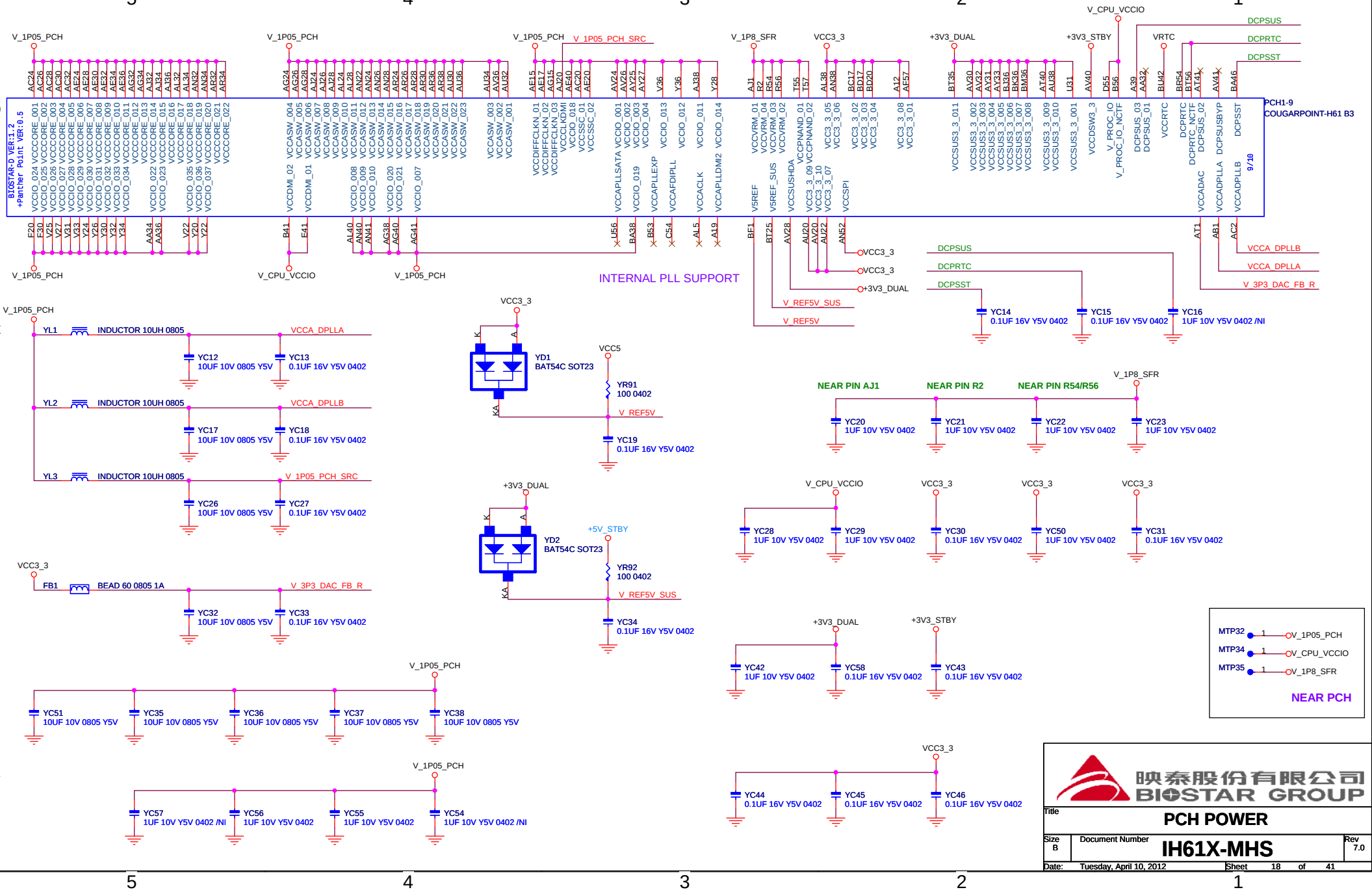

映泰股份有限公司
BIOSTAR GROUP

Title	PCH POWER	
Size: B	Document Number: IH61X-MHS	Rev: 7.0
Date: Tuesday, April 10, 2012	Sheet 18 of 41	

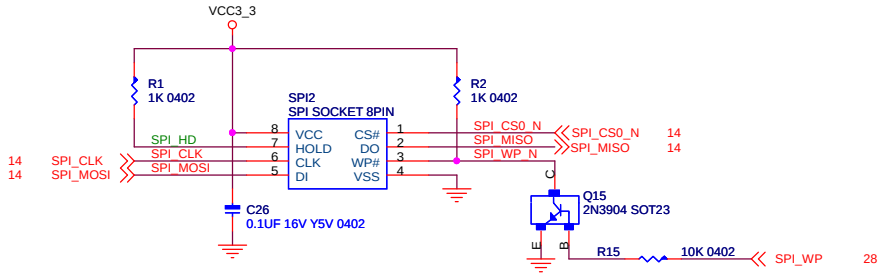

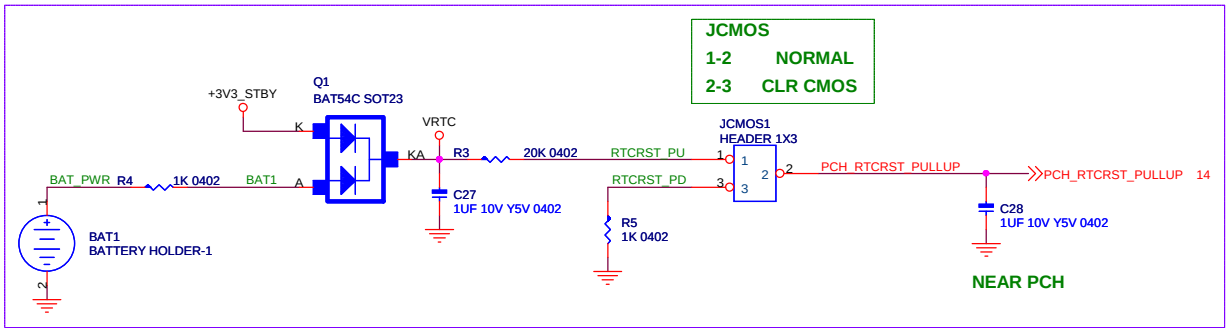

映泰股份有限公司
BIOSTAR GROUP

Title	SPI ROM/RTC CRYSTAL/BAT	
Size B	Document Number IH61X-MHS	Rev 7.0
Date: Tuesday, April 10, 2012	Sheet 19 of 41	

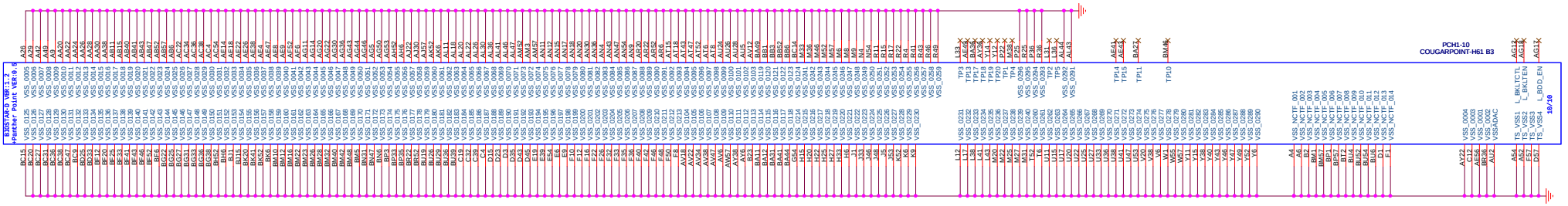

BIOSTAR GROUP

Title	PCH GND		
Size: Custom	Document Number: IH61X-MHS		Rev: 7.0
Date: Tuesday, April 10, 2012	Sheet 20 of 41		

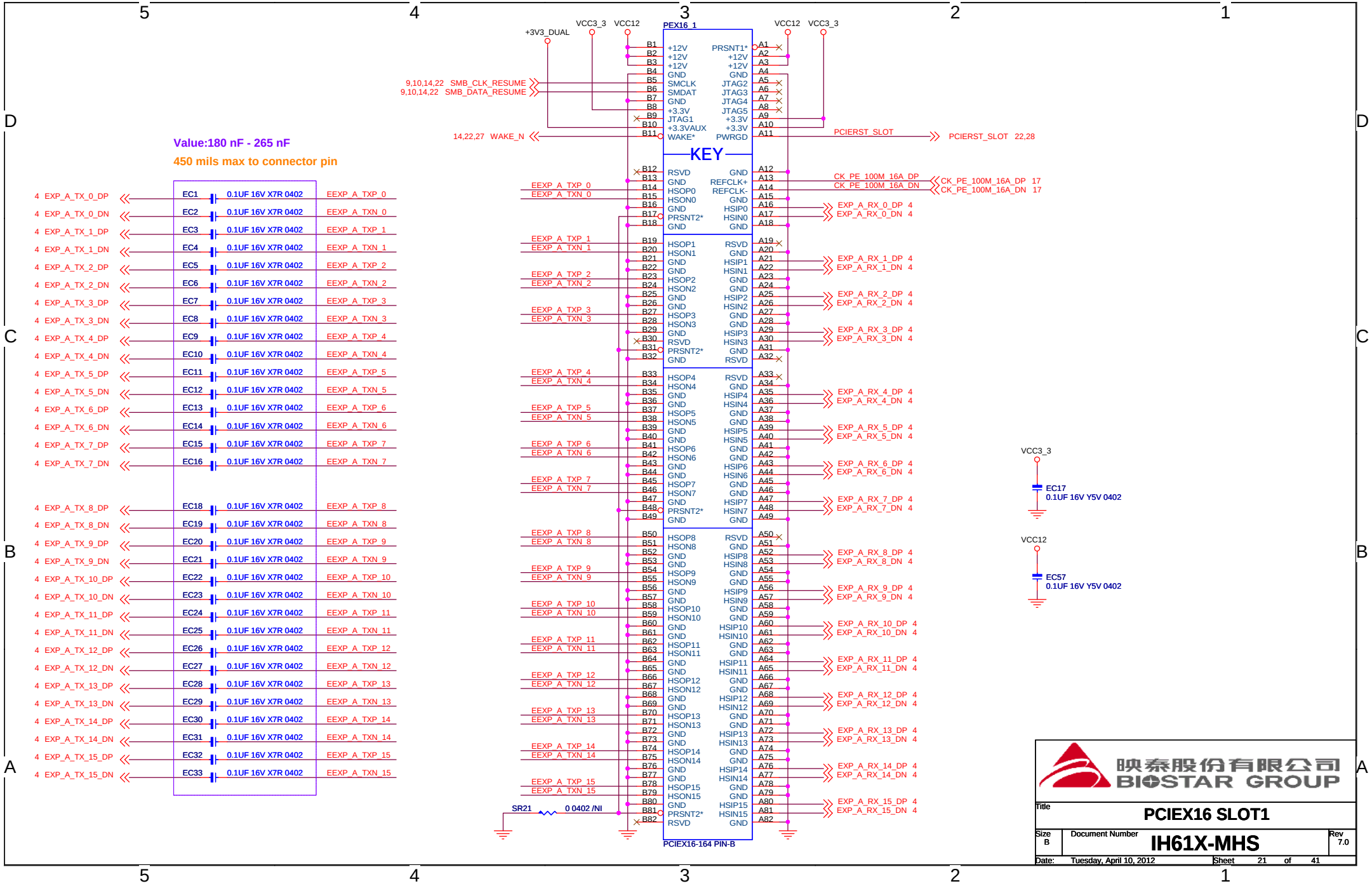
Value:180 nF - 265 nF
450 mils max to connector pin
PEX16_1
KEY
PCIEX16-164 PIN-B
+3V3_DUAL
VCC3_3
VCC12
SR21
0 0402 /NI
EC1 EC2 EC3 EC4 EC5 EC6 EC7 EC8 EC9 EC10 EC11 EC12 EC13 EC14 EC15 EC16 EC17 EC18 EC19 EC20 EC21 EC22 EC23 EC24 EC25 EC26 EC27 EC28 EC29 EC30 EC31 EC32 EC33 EC57
0.1UF 16V X7R 0402
0.1UF 16V Y5V 0402
EXP_A_TX_0_DP EXP_A_TX_0_DN EXP_A_TX_1_DP EXP_A_TX_1_DN EXP_A_TX_2_DP EXP_A_TX_2_DN EXP_A_TX_3_DP EXP_A_TX_3_DN EXP_A_TX_4_DP EXP_A_TX_4_DN EXP_A_TX_5_DP EXP_A_TX_5_DN EXP_A_TX_6_DP EXP_A_TX_6_DN EXP_A_TX_7_DP EXP_A_TX_7_DN EXP_A_TX_8_DP EXP_A_TX_8_DN EXP_A_TX_9_DP EXP_A_TX_9_DN EXP_A_TX_10_DP EXP_A_TX_10_DN EXP_A_TX_11_DP EXP_A_TX_11_DN EXP_A_TX_12_DP EXP_A_TX_12_DN EXP_A_TX_13_DP EXP_A_TX_13_DN EXP_A_TX_14_DP EXP_A_TX_14_DN EXP_A_TX_15_DP EXP_A_TX_15_DN
EEXP_A_TXP_0 EEXP_A_TXN_0 EEXP_A_TXP_1 EEXP_A_TXN_1 EEXP_A_TXP_2 EEXP_A_TXN_2 EEXP_A_TXP_3 EEXP_A_TXN_3 EEXP_A_TXP_4 EEXP_A_TXN_4 EEXP_A_TXP_5 EEXP_A_TXN_5 EEXP_A_TXP_6 EEXP_A_TXN_6 EEXP_A_TXP_7 EEXP_A_TXN_7 EEXP_A_TXP_8 EEXP_A_TXN_8 EEXP_A_TXP_9 EEXP_A_TXN_9 EEXP_A_TXP_10 EEXP_A_TXN_10 EEXP_A_TXP_11 EEXP_A_TXN_11 EEXP_A_TXP_12 EEXP_A_TXN_12 EEXP_A_TXP_13 EEXP_A_TXN_13 EEXP_A_TXP_14 EEXP_A_TXN_14 EEXP_A_TXP_15 EEXP_A_TXN_15
9,10,14,22 SMB_CLK_RESUME
9,10,14,22 SMB_DATA_RESUME
14,22,27 WAKE_N
PCIERST_SLOT
PCIERST_SLOT 22,28
CK_PE_100M_16A_DP
CK_PE_100M_16A_DN
CK_PE_100M_16A_DP 17
CK_PE_100M_16A_DN 17
EXP_A_RX_0_DP 4
EXP_A_RX_0_DN 4
EXP_A_RX_1_DP 4
EXP_A_RX_1_DN 4
EXP_A_RX_2_DP 4
EXP_A_RX_2_DN 4
EXP_A_RX_3_DP 4
EXP_A_RX_3_DN 4
EXP_A_RX_4_DP 4
EXP_A_RX_4_DN 4
EXP_A_RX_5_DP 4
EXP_A_RX_5_DN 4
EXP_A_RX_6_DP 4
EXP_A_RX_6_DN 4
EXP_A_RX_7_DP 4
EXP_A_RX_7_DN 4
EXP_A_RX_8_DP 4
EXP_A_RX_8_DN 4
EXP_A_RX_9_DP 4
EXP_A_RX_9_DN 4
EXP_A_RX_10_DP 4
EXP_A_RX_10_DN 4
EXP_A_RX_11_DP 4
EXP_A_RX_11_DN 4
EXP_A_RX_12_DP 4
EXP_A_RX_12_DN 4
EXP_A_RX_13_DP 4
EXP_A_RX_13_DN 4
EXP_A_RX_14_DP 4
EXP_A_RX_14_DN 4
EXP_A_RX_15_DP 4
EXP_A_RX_15_DN 4
映泰股份有限公司
BIOSTAR GROUP
Title
PCIEX16 SLOT1
Size B
Document Number
IH61X-MHS
Rev 7.0
Date: Tuesday, April 10, 2012
Sheet 21 of 41

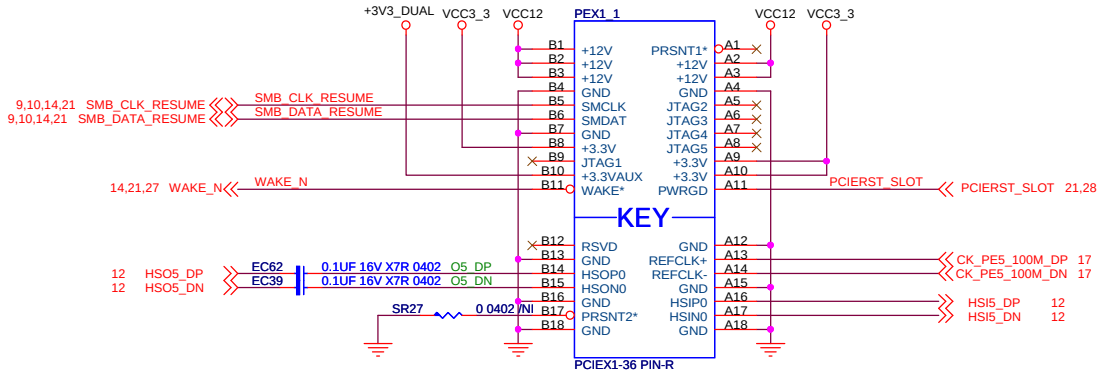

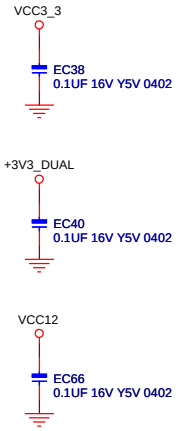

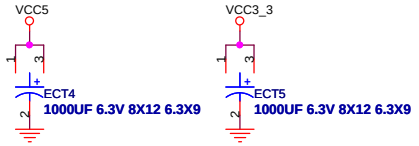

ECT4,ECT5

NETIN: 1000UF 6.3V 8X12 6.3X9
BOM: 1000UF 6.3V 8X12 6.3X9---電解
560UF-S 6.3V 6.3X9 APAQ---固態

映泰股份有限公司
BIOSTAR GROUP

Title	PCIE X1 SLOT	
Size B	Document Number IH61X-MHS	Rev 7.0
Date: Tuesday, April 10, 2012	Sheet 22 of 41	

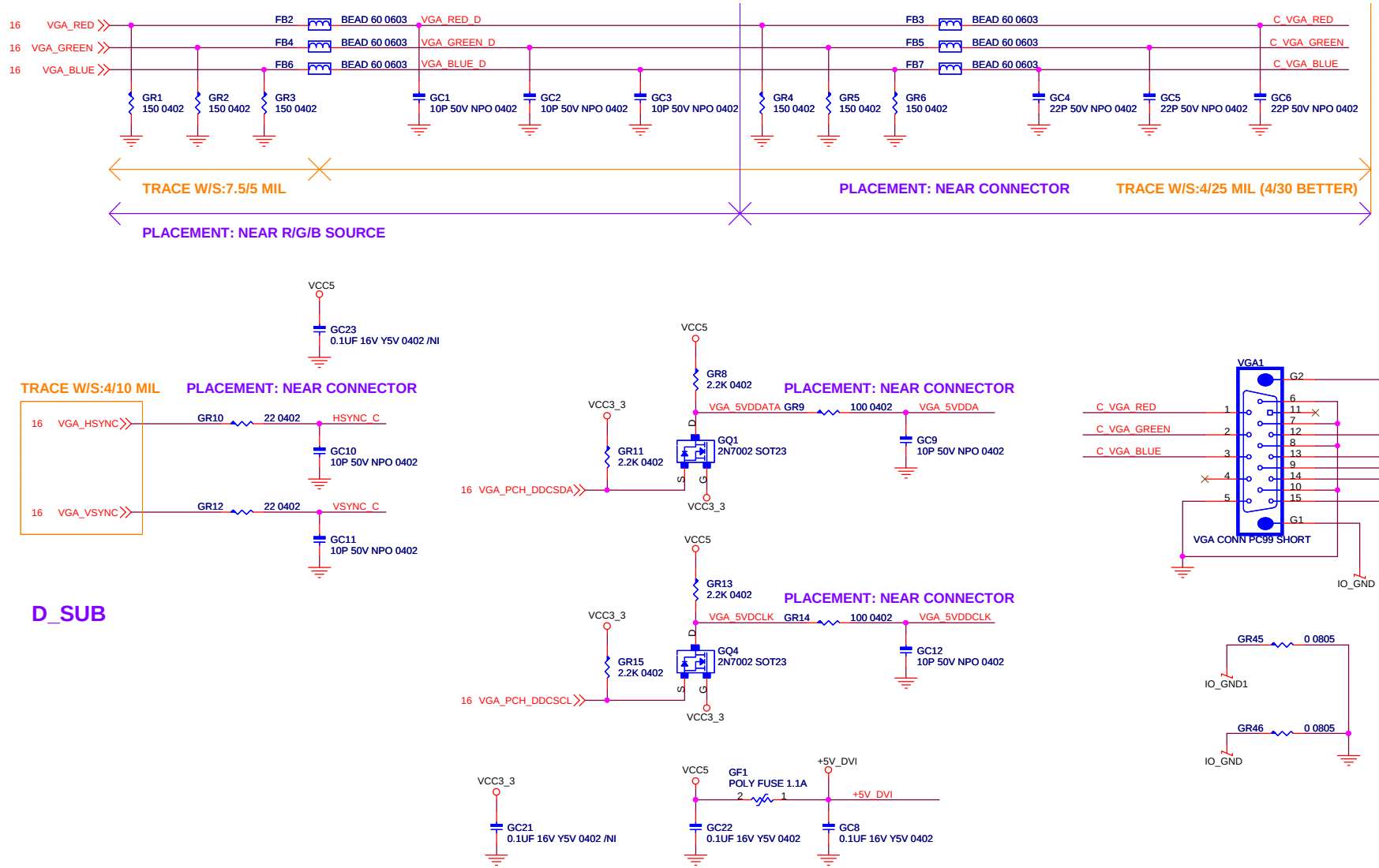

D_SUB

映泰股份有限公司 BIOSTAR GROUP		
Title	VGA CONNECTOR	
Size B	Document Number IH61X-MHS	Rev 7.0
Date: Tuesday, April 10, 2012	Sheet 23 of 41	

HDMI

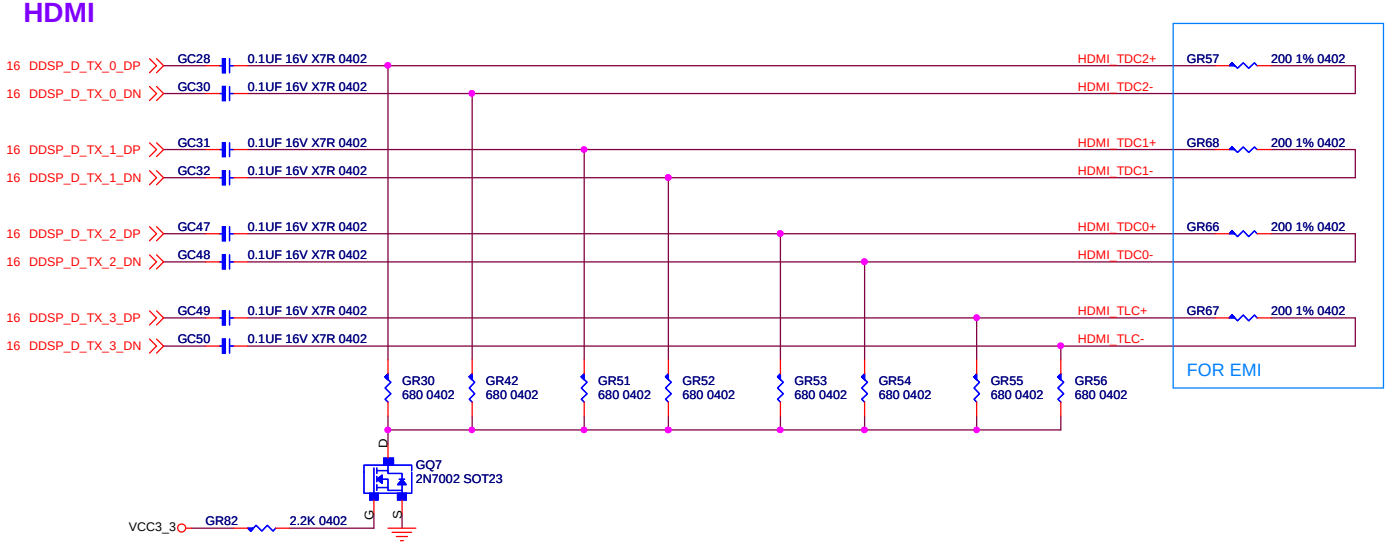

HDMI CONNECTOR

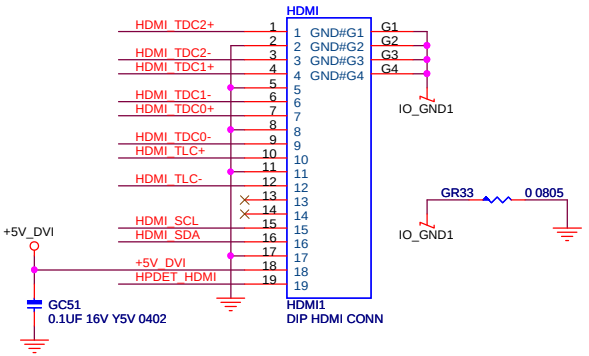

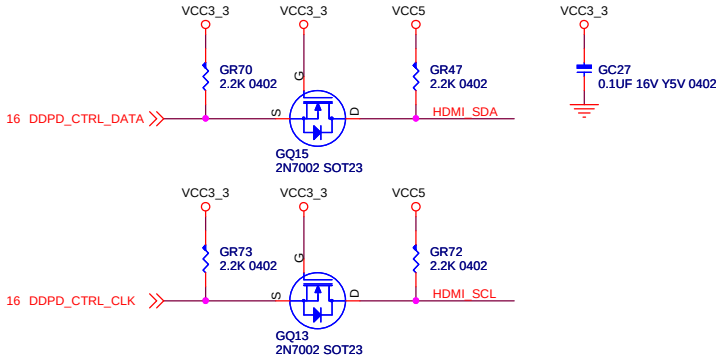

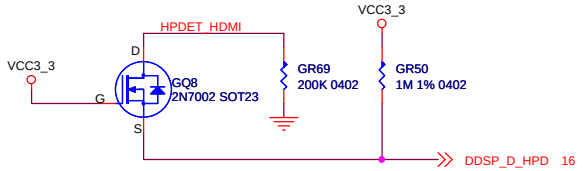

◇BIOSTAR'S PROPRIETARY INFORMATION◆

◇Any unauthorized use, reproduction, duplication, or disclosure of this document will be subject to the applicable civil and/orcriminal penalties.◆

映泰股份有限公司 BIOSTAR GROUP

Title: HDMI CONNECTOR

Size	Document Number	Rev
B	IH61X-MHS	7.0

Date: Tuesday, April 10, 2012 Sheet 24 of 41

AUDIO PART: A+Reference

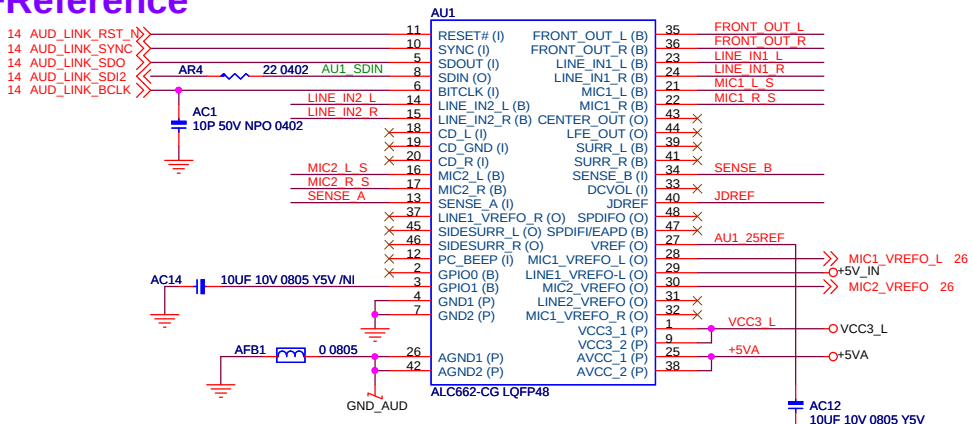

VCC3_L

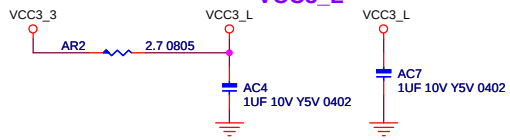

+5VA DECUPLING

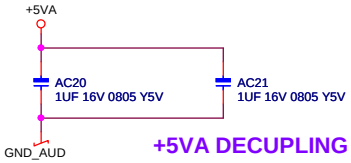

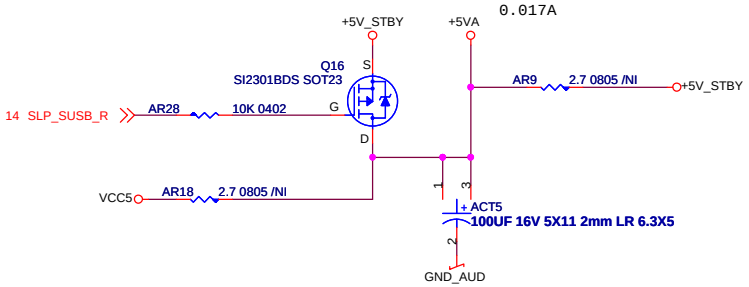

ACT1,ACT2,ACT3,ACT4,ACT5

NETIN: 100UF 16V 5X11 2MM LR 6.3X5
BOM: 100UF 16V 5X11 2MM LR 6.3X5---電解
100UF-S 16V 6.3X5 5X11---固態

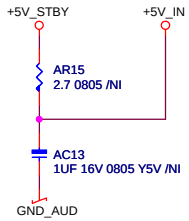

Near PIN 29

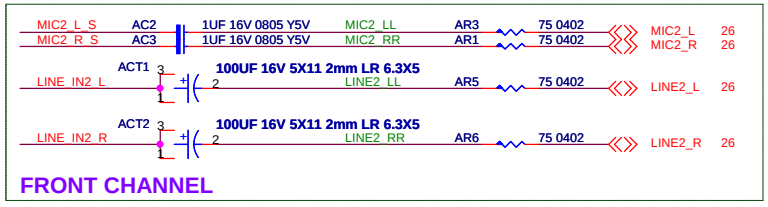

FRONT CHANNEL

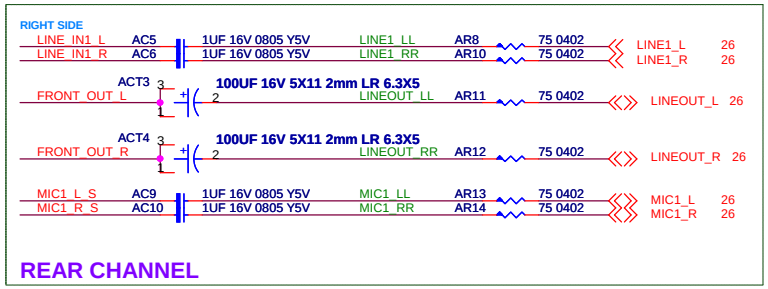

REAR CHANNEL

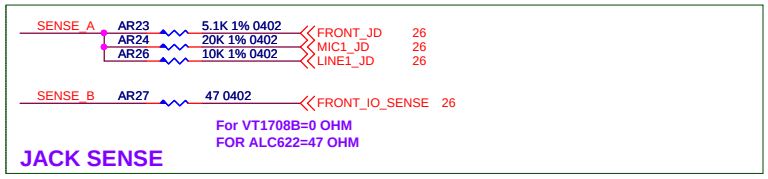

JACK SENSE

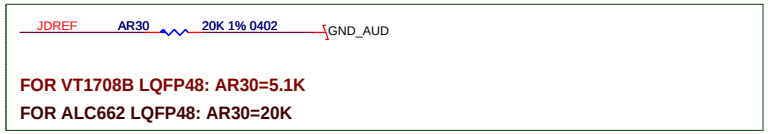

COMPONENT CONTRAST LIST

AUDIO	AR7	ACT5	AR15	AC13	AC14	AC20	AC21	AR27	AR30
ALC662VD	X	X	2.7	O	O	10UF 10V 0805 Y5V	10UF 10V 0805 Y5V	47 OHM	20K
VT1708	2.7 0805	O	X	X	X	1UF 16V 0805 Y5V	1UF 16V 0805 Y5V	0 OHM	5.1K
ALC662CG	2.7 0805	O	X	X	X	1UF 16V 0805 Y5V	1UF 16V 0805 Y5V	47 OHM	20K

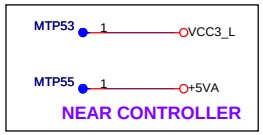

映泰股份有限公司
BIOSTAR GROUP

Title	CODEC ALC662CG	
Size B	Document Number IH61X-MHS	Rev 7.0
Date: Tuesday, April 10, 2012	Sheet 25 of 41	

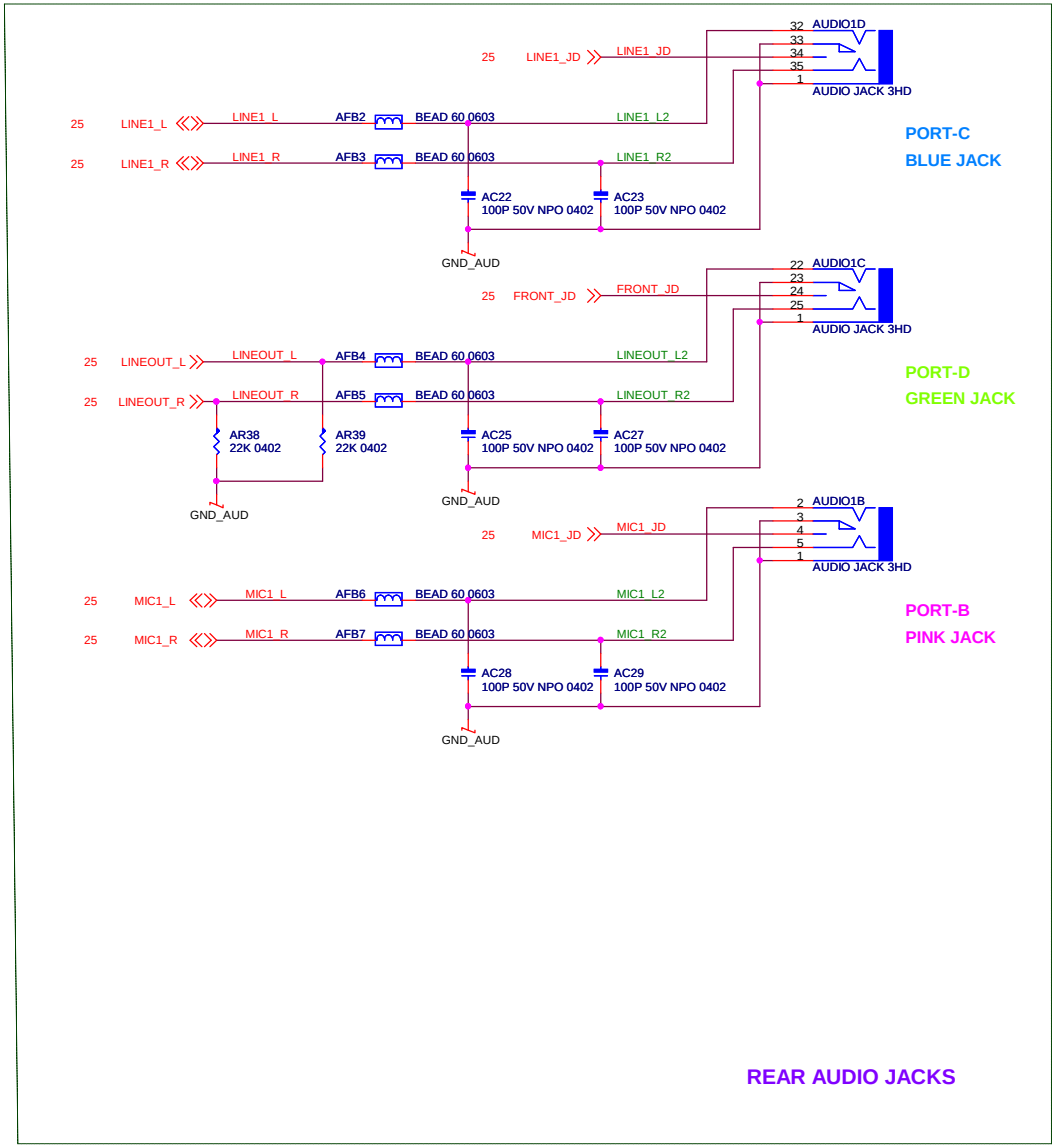

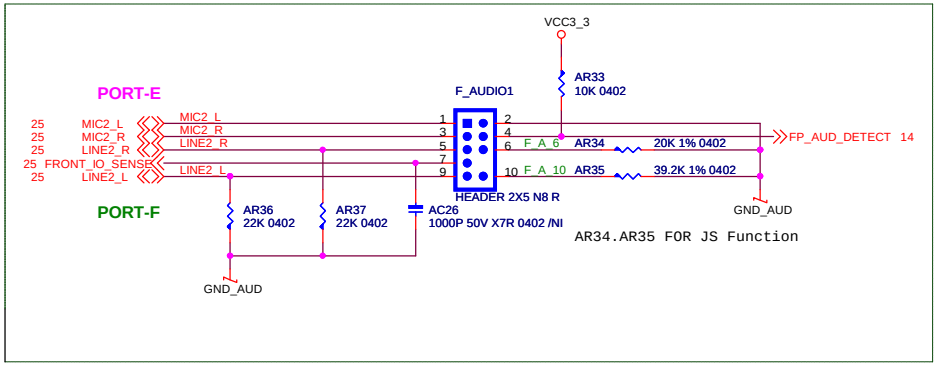

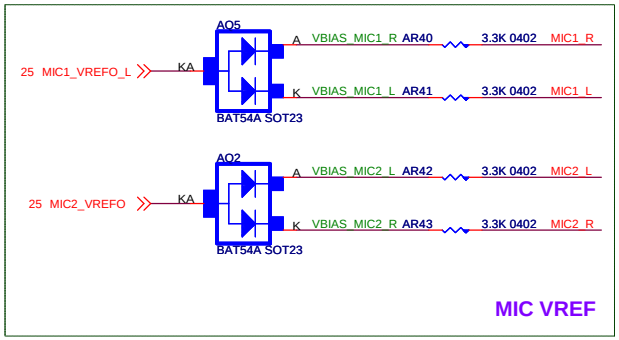

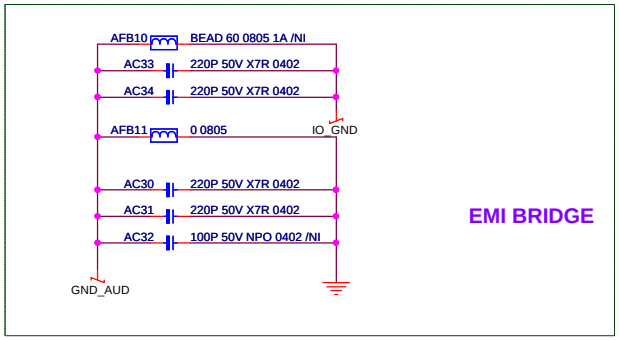

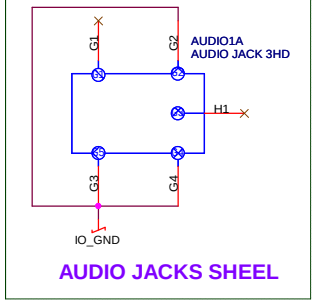

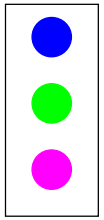

映泰股份有限公司
BIOSTAR GROUP

Title	AUDIO CONNECTOR	
Size: Custom	Document Number: IH61X-MHS	Rev: 7.0
Date: Tuesday, April 10, 2012	Sheet 26 of 41	

LAN PART: L+Reference

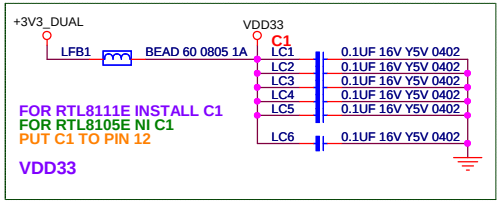

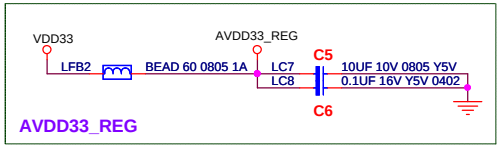

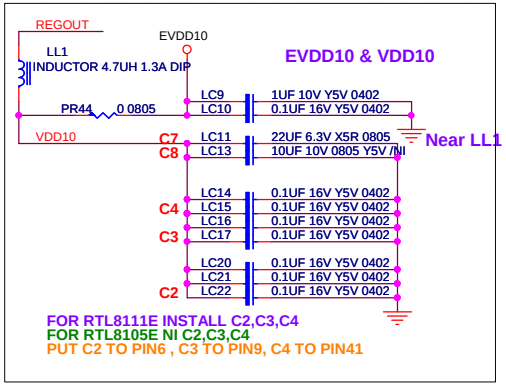

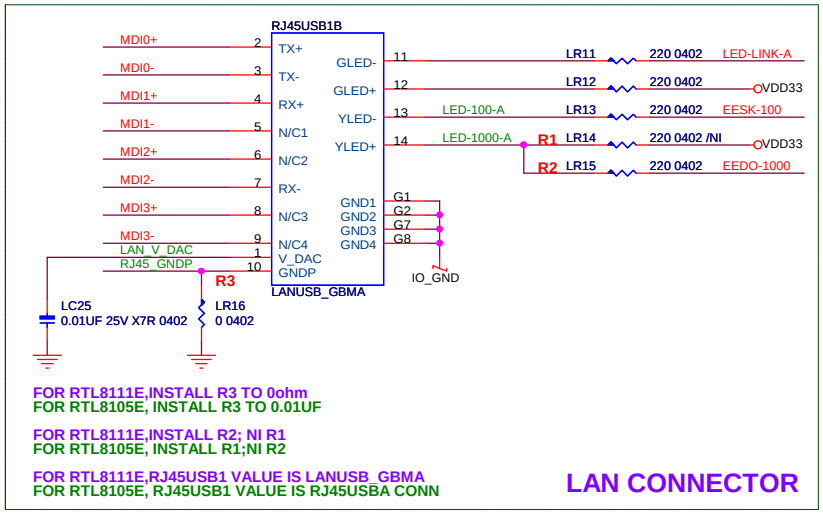

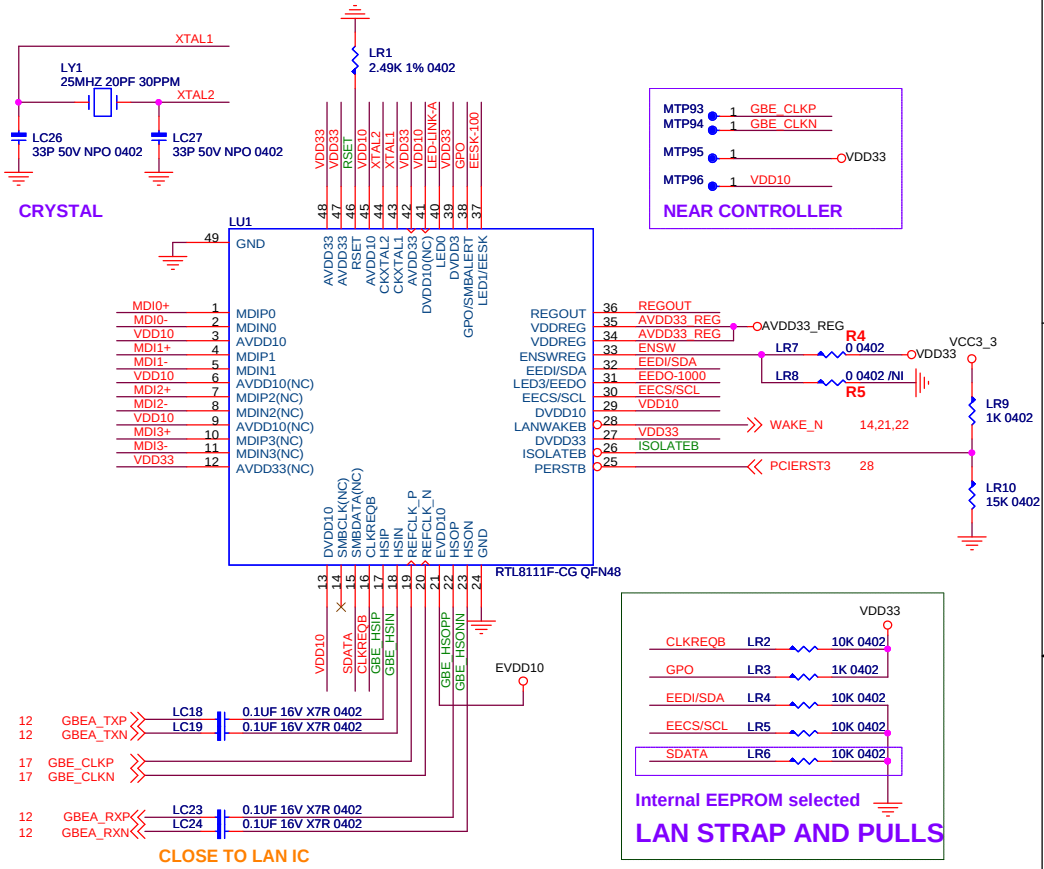

COMPONENT CONTRAST LIST

LAN PARTS	C1	C2	C3	C4	R1	R2	R3	L1	R4	R5	L2	C5	C6	C7	C8	RJ45 CONN
RTL8111E/F	O	O	O	O	X	O	0ohm	O	O	X	O	O	O	O	O	LANUSB_GBMA
RTL8105E	X	X	X	X	O	X	0.01uF	X	X	O	X	X	X	X	X	RJ45USBA CONN

映泰股份有限公司 BIOSTAR GROUP

Title	RTL8111F/8105E	
Size B	Document Number IH61X-MHS	Rev 7.0
Date: Tuesday, April 10, 2012	Sheet 27 of 41	

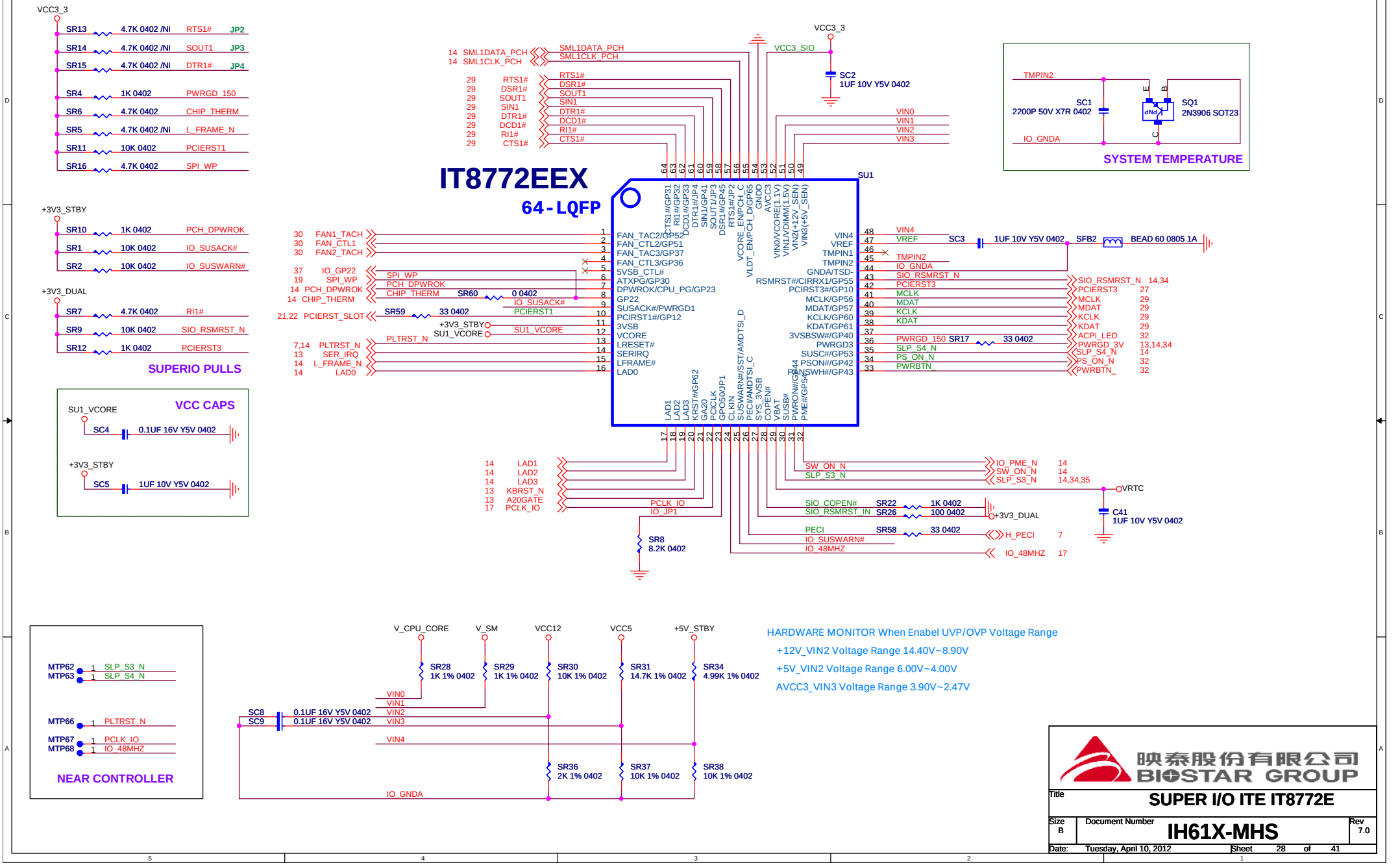
VCC3_3
SR13 4.7K 0402 /NI RTS1# JP2
SR14 4.7K 0402 /NI SOUT1 JP3
SR15 4.7K 0402 /NI DTR1# JP4
SR4 1K 0402 PWRGD_150
SR6 4.7K 0402 CHIP_THERM
SR5 4.7K 0402 /NI L_FRAME_N
SR11 10K 0402 PCIERST1
SR16 4.7K 0402 SPI_WP
+3V3_STBY
SR10 1K 0402 PCH_DPWROK
SR1 10K 0402 IO_SUSACK#
SR2 10K 0402 IO_SUSWARN#
+3V3_DUAL
SR7 4.7K 0402 RI1#
SR9 10K 0402 SIO_RSMRST_N
SR12 1K 0402 PCIERST3
SUPERIO PULLS
SU1_VCORE
VCC CAPS
SC4 0.1UF 16V Y5V 0402
+3V3_STBY
SC5 1UF 10V Y5V 0402
IT8772EEX
64 - LQFP
SU1
VCC3_3
VCC3_SIO
SC2 1UF 10V Y5V 0402
SML1DATA_PCH
SML1CLK_PCH
RTS1#
DSR1#
SOUT1
SIN1
DTR1#
DCD1#
RI1#
CTS1#
VIN0
VIN1
VIN2
VIN3
TMPIN2
SC1 2200P 50V X7R 0402
SQ1 2N3906 SOT23
IO_GNDA
SYSTEM TEMPERATURE
FAN1_TACH
FAN_CTL1
FAN2_TACH
IO_GP22
SPI_WP
PCH_DPWROK
CHIP_THERM
SR60 0 0402
IO_SUSACK#
PCIERST1
SR59 33 0402
+3V3_STBY
SU1_VCORE
PLTRST_N
SER_IRQ
L_FRAME_N
LAD0
VIN4
VREF
SC3 1UF 10V Y5V 0402
SFB2 BEAD 60 0805 1A
TMPIN1
TMPIN2
IO_GNDA
SIO_RSMRST_N
PCIERST3
MCLK
MDAT
KCLK
KDAT
ACPI_LED
PWRGD_150 SR17 33 0402
PWRGD3
SLP_S4_N
PS_ON_N
PWRBTN_
LAD1
LAD2
LAD3
KBRST_N
A20GATE
PCLK_IO
IO_JP1
SR8 8.2K 0402
SW_ON_N
SLP_S3_N
IO_PME_N
VRTC
C41 1UF 10V Y5V 0402
SIO_COPEN#
SIO_RSMRST_IN
SR22 1K 0402
SR26 100 0402
+3V3_DUAL
PECI
SR58 33 0402
IO_SUSWARN#
IO_48MHZ
H_PECI
MTP62 SLP_S3_N
MTP63 SLP_S4_N
MTP66 PLTRST_N
MTP67 PCLK_IO
MTP68 IO_48MHZ
NEAR CONTROLLER
V_CPU_CORE
V_SM
VCC12
VCC5
+5V_STBY
SR28 1K 1% 0402
SR29 1K 1% 0402
SR30 10K 1% 0402
SR31 14.7K 1% 0402
SR34 4.99K 1% 0402
SC8 0.1UF 16V Y5V 0402
SC9 0.1UF 16V Y5V 0402
SR36 2K 1% 0402
SR37 10K 1% 0402
SR38 10K 1% 0402
IO_GNDA
HARDWARE MONITOR When Enabel UVP/OVP Voltage Range
+12V_VIN2 Voltage Range 14.40V~8.90V
+5V_VIN2 Voltage Range 6.00V~4.00V
AVCC3_VIN3 Voltage Range 3.90V~2.47V
映泰股份有限公司
BIOSTAR GROUP
Title
SUPER I/O ITE IT8772E
Size B
Document Number
IH61X-MHS
Rev 7.0
Date: Tuesday, April 10, 2012
Sheet 28 of 41

COM PORT

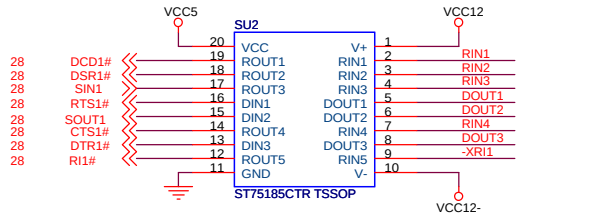

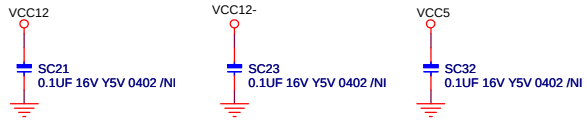

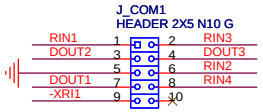

KEYBOARD & MOUSE

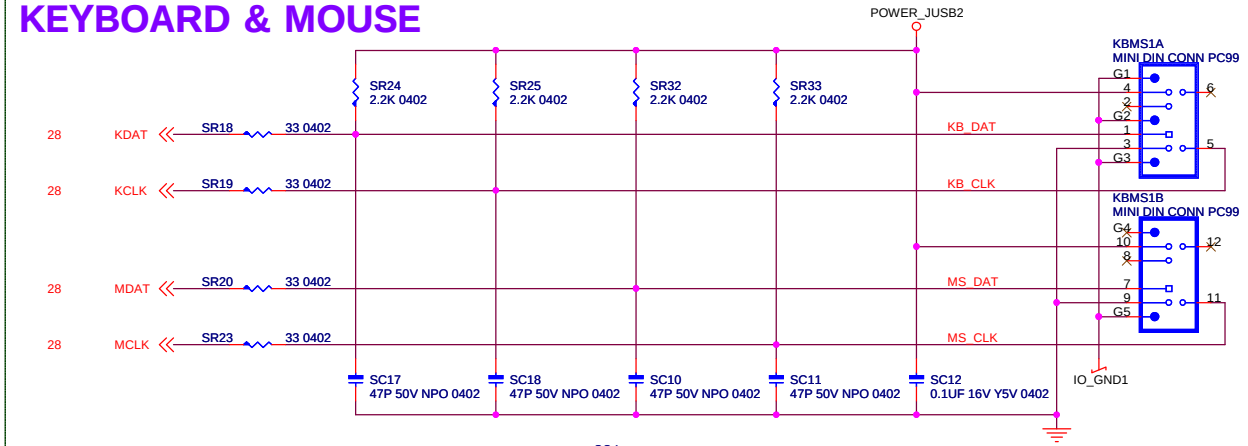

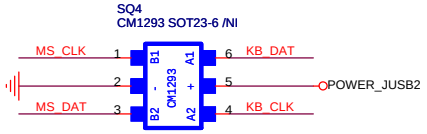



映泰股份有限公司
BIOSTAR GROUP

Title	COM / PS2 CONN	
Size B	Document Number IH61X-MHS	Rev 7.0
Date: Tuesday, April 10, 2012	Sheet 29 of 41	

CPU FAN/SYSTEM FAN1

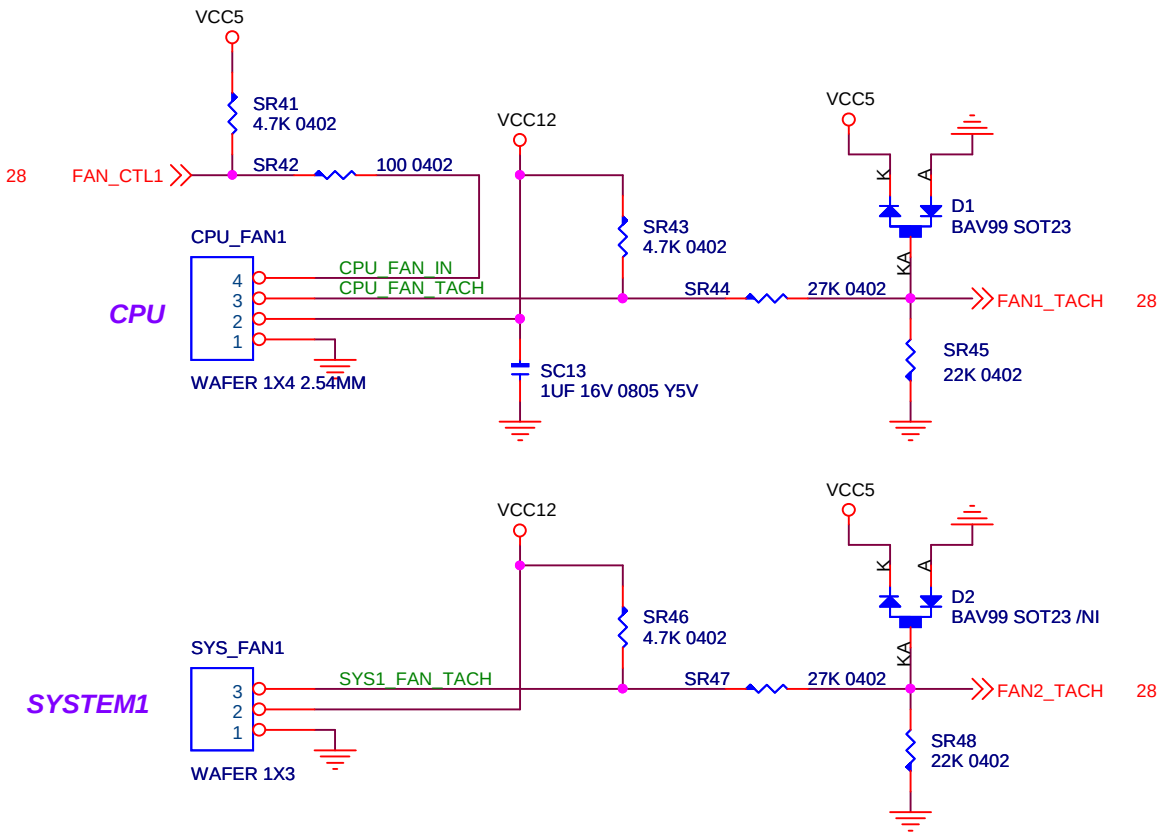

映泰股份有限公司
BIOSTAR GROUP

Title	HW MONITOR/FAN CONTROL	
Size A	Document Number IH61X-MHS	Rev 7.0
Date: Tuesday, April 10, 2012	Sheet 30 of 41	

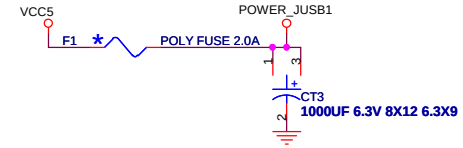

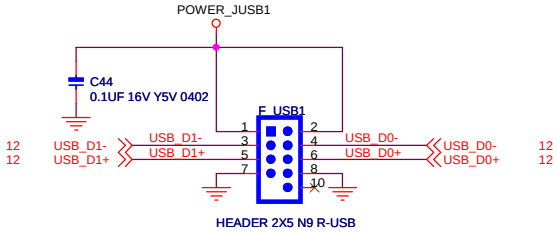

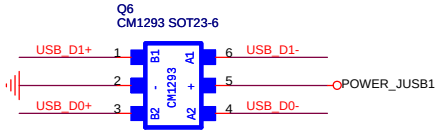

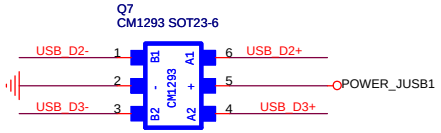

CT2,CT3

NETIN: 1000UF 6.3V 8X12 6.3X9
BOM: 1000UF 6.3V 8X12 6.3X9---電解
560UF-S 6.3V 6.3X9 APAQ---固態

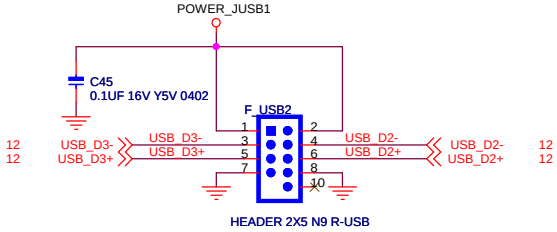

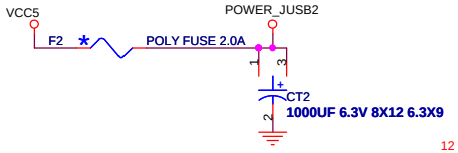

BACK PANEL USB
PLACE NEAR CONN

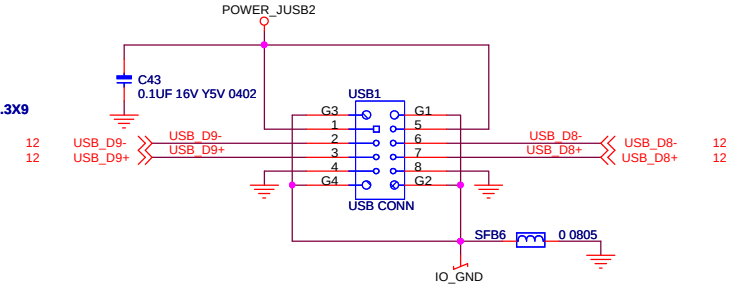

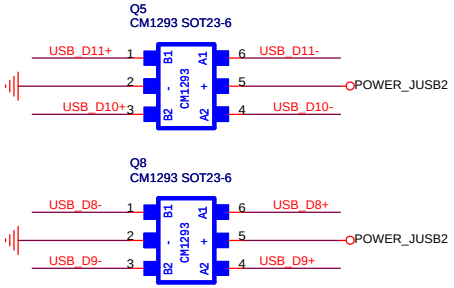

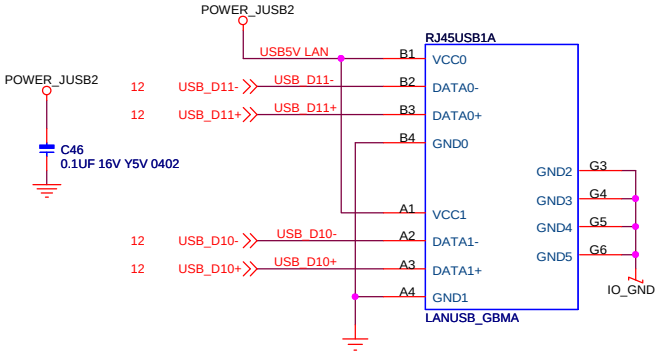

映泰股份有限公司
BIOSTAR GROUP

Title	USB CONN	
Size: B	Document Number: IH61X-MHS	Rev: 7.0
Date: Tuesday, April 10, 2012	Sheet 31 of 41	

24 PIN POWER CONNECTOR

JATXPWR

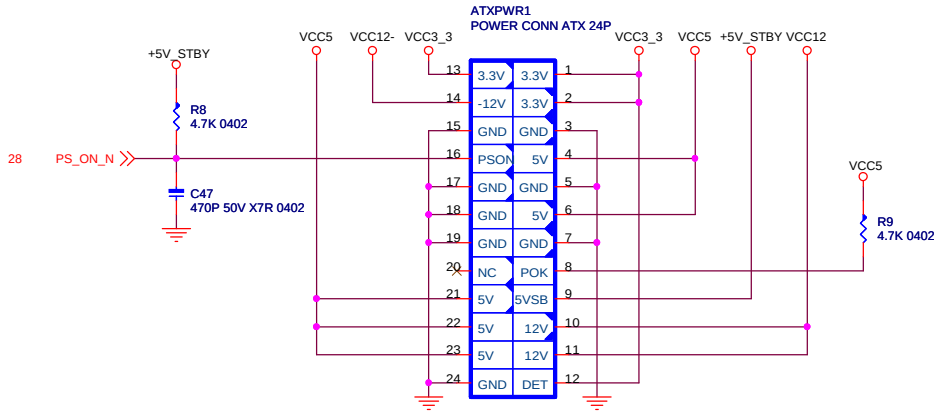

FOR EMI

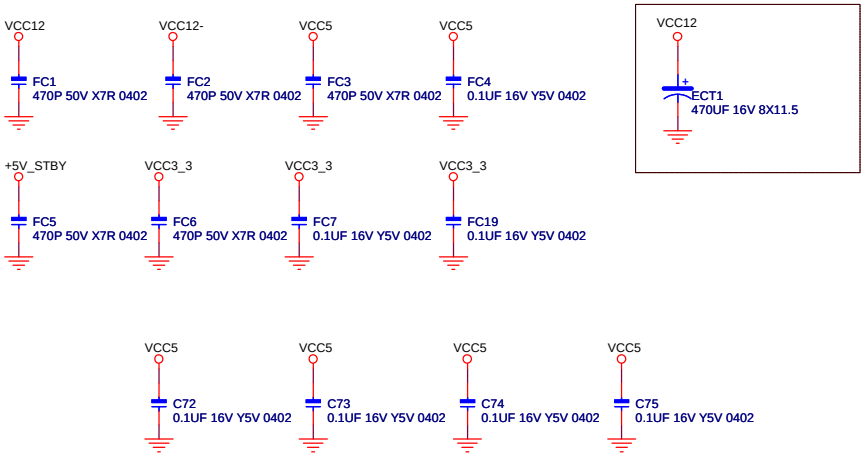

FRONT PANEL HEADER

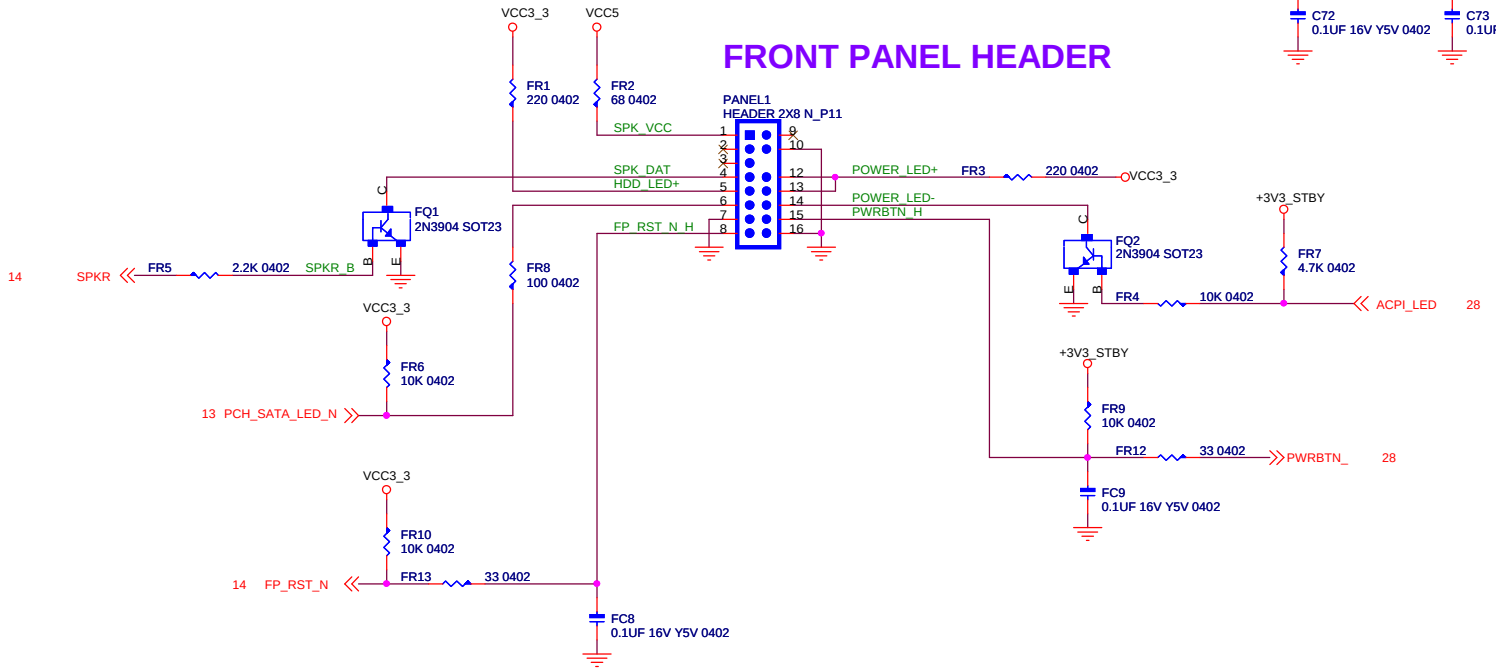

映泰股份有限公司
BIOSTAR GROUP

Title	24PIN POWER CONN&FP	
Size B	Document Number IH61X-MHS	Rev 7.0
Date: Tuesday, April 10, 2012	Sheet 32 of 41	

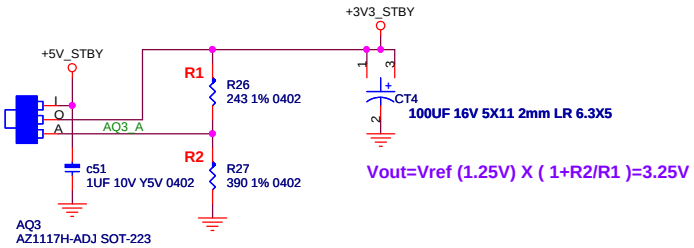

CT4,CT6,CT8

NETIN: 100UF 16V 5X11 2MM LR 6.3X5
BOM: 100UF 16V 5X11 2MM LR 6.3X5---電解
100UF-S 16V 6.3X5 5X11---固態

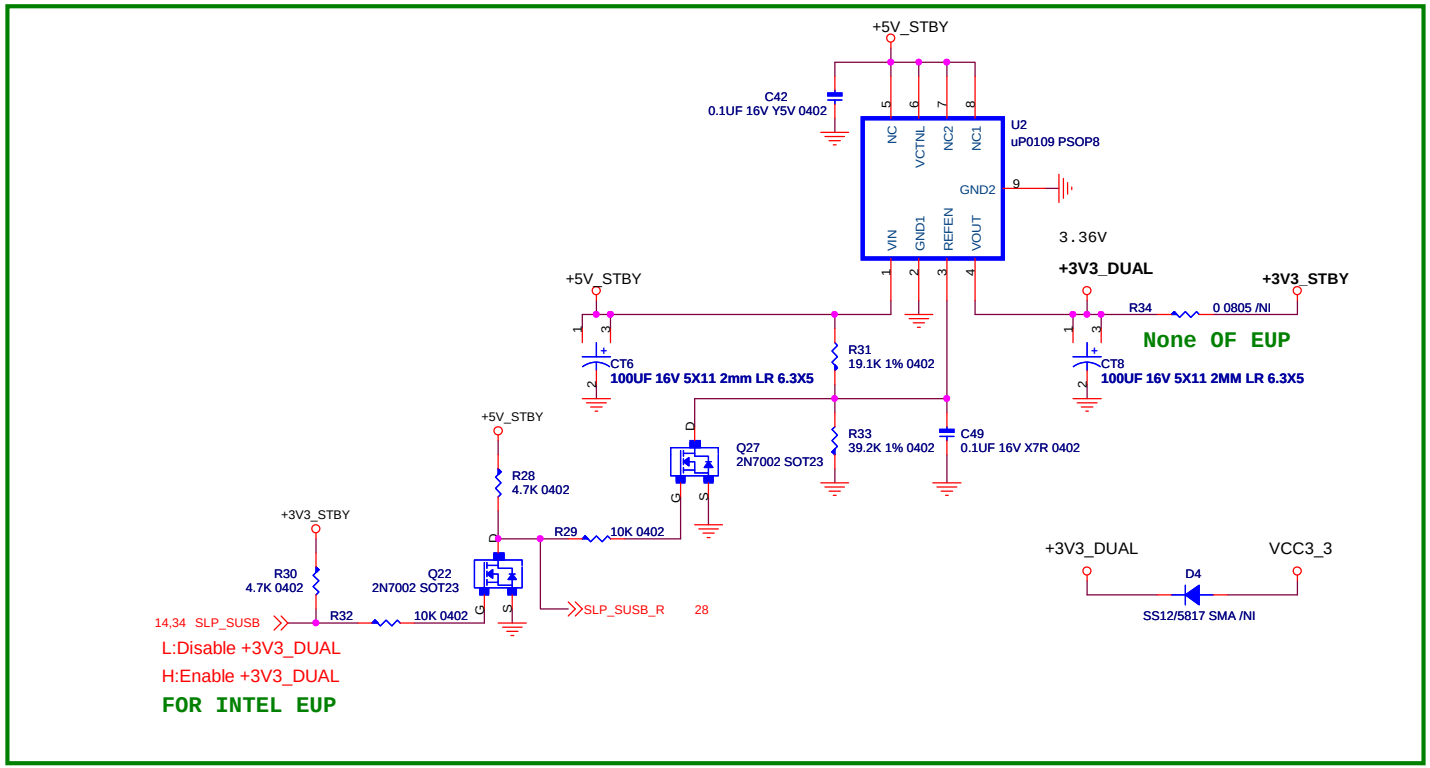

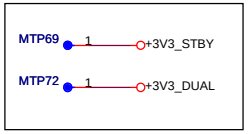

映泰股份有限公司
BIOSTAR GROUP

Title	ACPI POWER CONTROL	
Size B	Document Number IH61X-MHS	Rev 7.0
Date: Tuesday, April 10, 2012	Sheet 33 of 41	

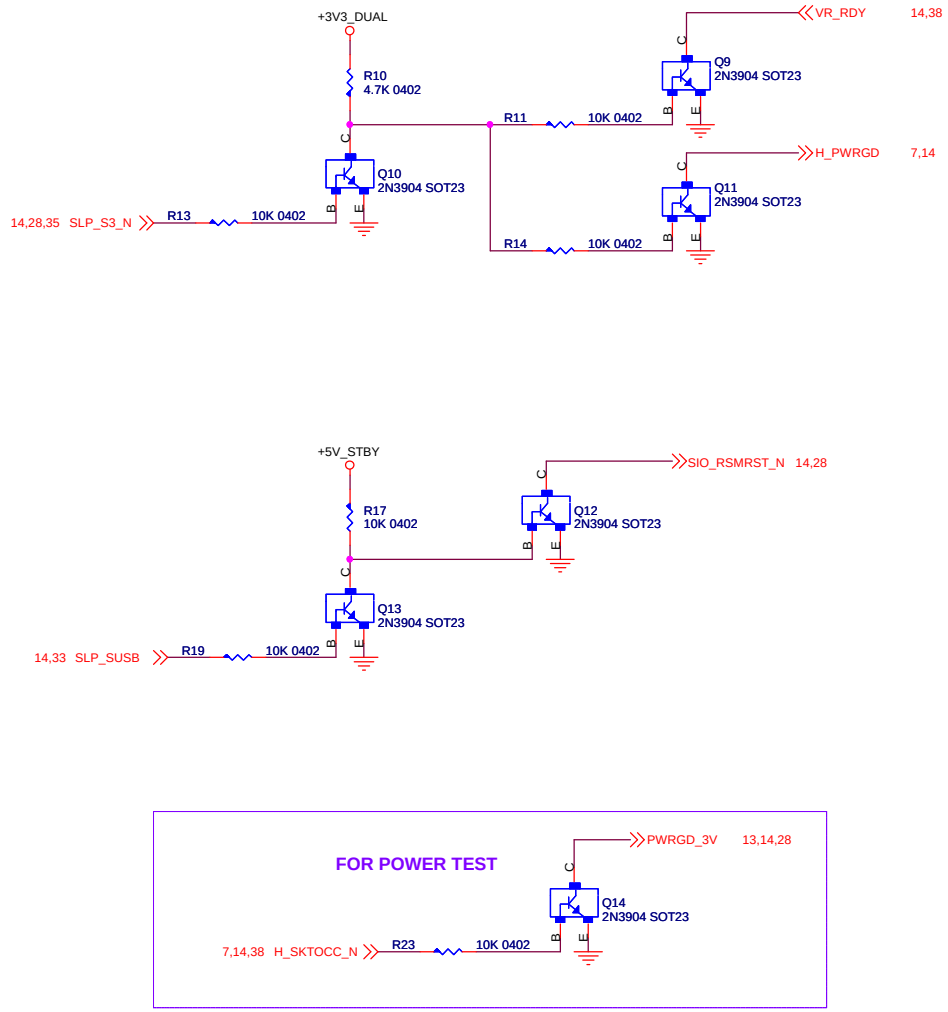

映泰股份有限公司
BIOSTAR GROUP

Title	RESUME RESET LOGIC	
Size: B	Document Number: IH61X-MHS	Rev: 7.0
Date: Tuesday, April 10, 2012	Sheet 34 of 41	

MTP76 1 V1P05PCH_EN

MTP77 1 V_1P8_SFR_EN

NEAR OP

V_SA LEVEL SELECT

0: 0.925V

1: 0.85V

Sandy Bridge

Ivy Bridge

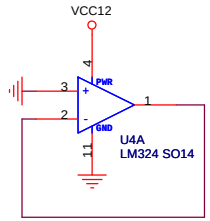

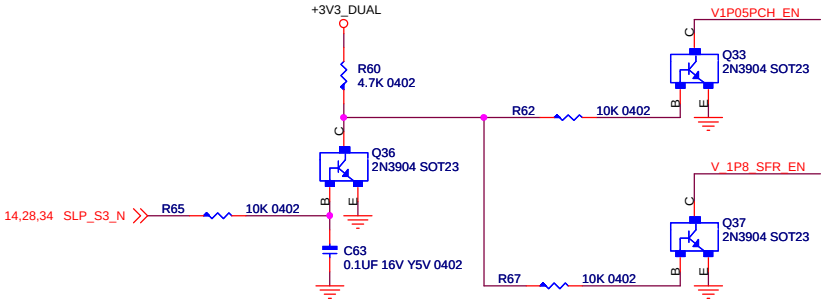

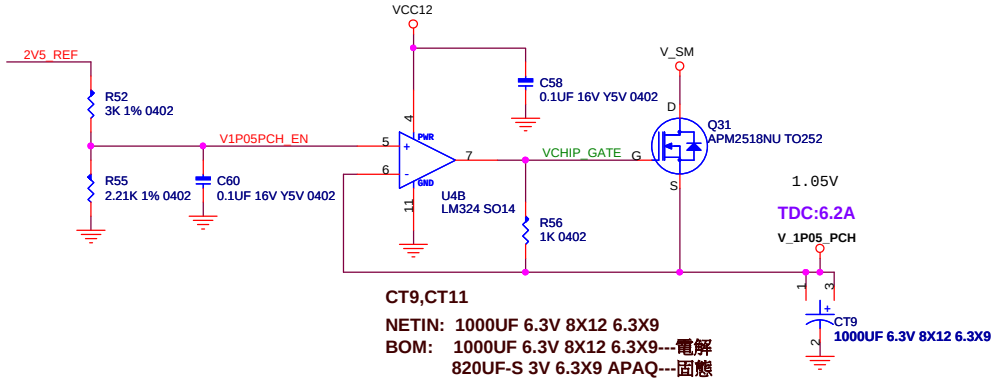

CT9,CT11

NETIN: 1000UF 6.3V 8X12 6.3X9

BOM: 1000UF 6.3V 8X12 6.3X9---電解

820UF-S 3V 6.3X9 APAQ---固態

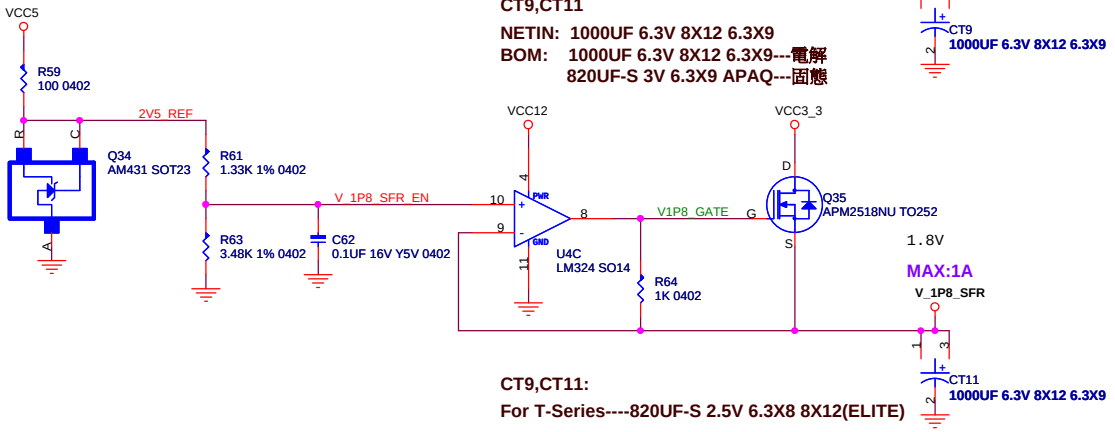

CT9,CT11:

For T-Series----820UF-S 2.5V 6.3X8 8X12(ELITE)

For NO T-Series-----1000UF 6.3V 8X12

映泰股份有限公司
BIOSTAR GROUP

Title: **LINEAR POWER CONTROL**

Size	Document Number	Rev
B	**IH61X-MHS**	7.0

Date: Tuesday, April 10, 2012 Sheet 35 of 41

MEMORY VLOTAGE CONTROL CIRCUIT
FOR INTEL PLATFORM

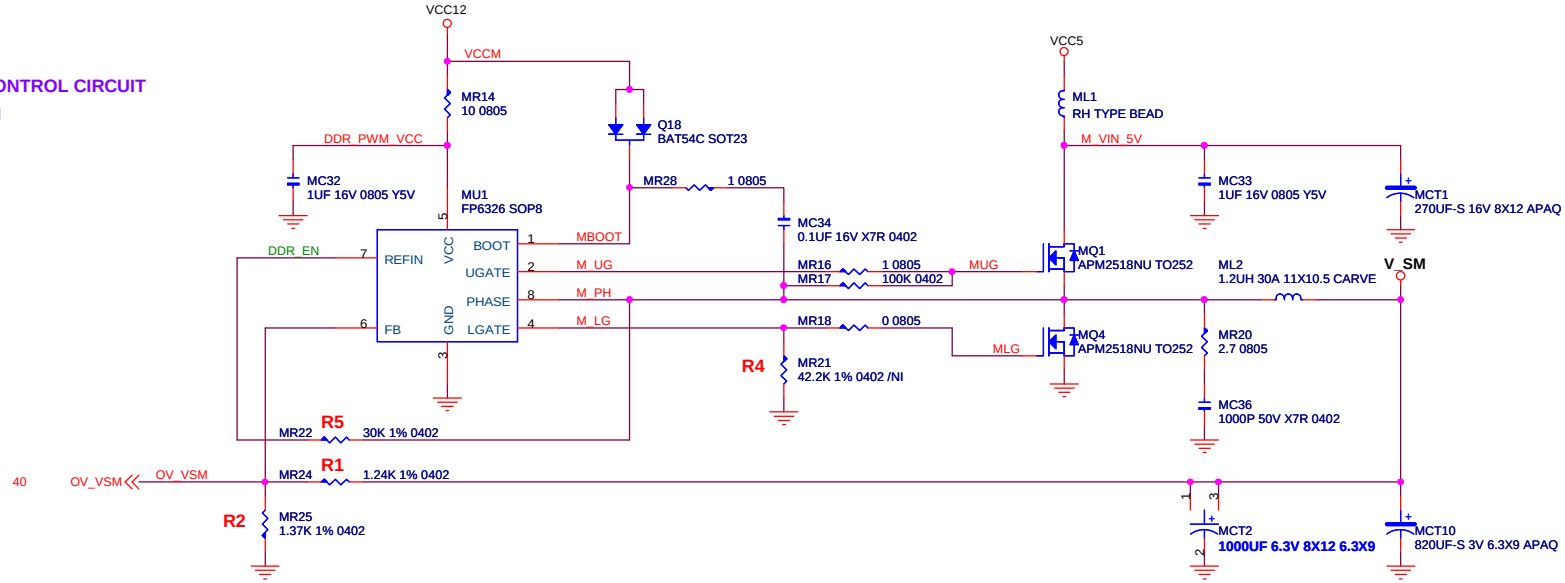

V_SM=0.8(1+R1/R2)=1.524V (R1=1.24K R2=1.37K)

R5 Only For FP6326

(40uA*R5-0.4V)/Rds=Ioc

FOR ONE LS MOSFET,R5=14.7K 1%

R4 Only For UP6109

OCP Set : 31A

FOR ONE LS MOSFET,P0603BDL : R4=42.2K 1%

MCT2

NETIN: 1000UF 6.3V 8X12 6.3X9

BOM: 1000UF 6.3V 8X12 6.3X9---電解

820UF-S 3V 6.3X9 APAQ---固態

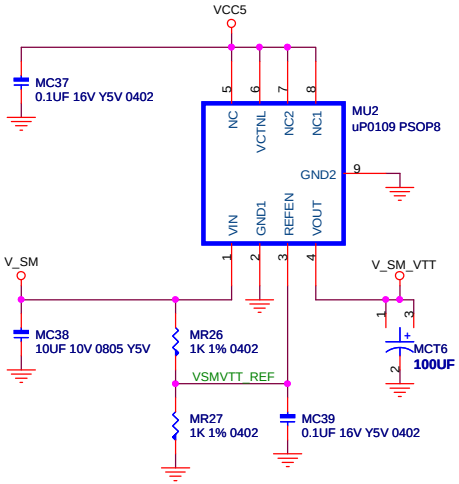

MCT6

NETIN: 100UF 16V 5X11 2MM LR 6.3X5

BOM: 100UF 16V 5X11 2MM LR 6.3X5---電解

100UF-S 16V 6.3X5 5X11---固態

映泰股份有限公司
BIOSTAR GROUP

Title	VSM DC-DC Conver	
Size: B	Document Number: IH61X-MHS	Rev: 7.0
Date: Tuesday, April 10, 2012	Sheet 36 of 41	

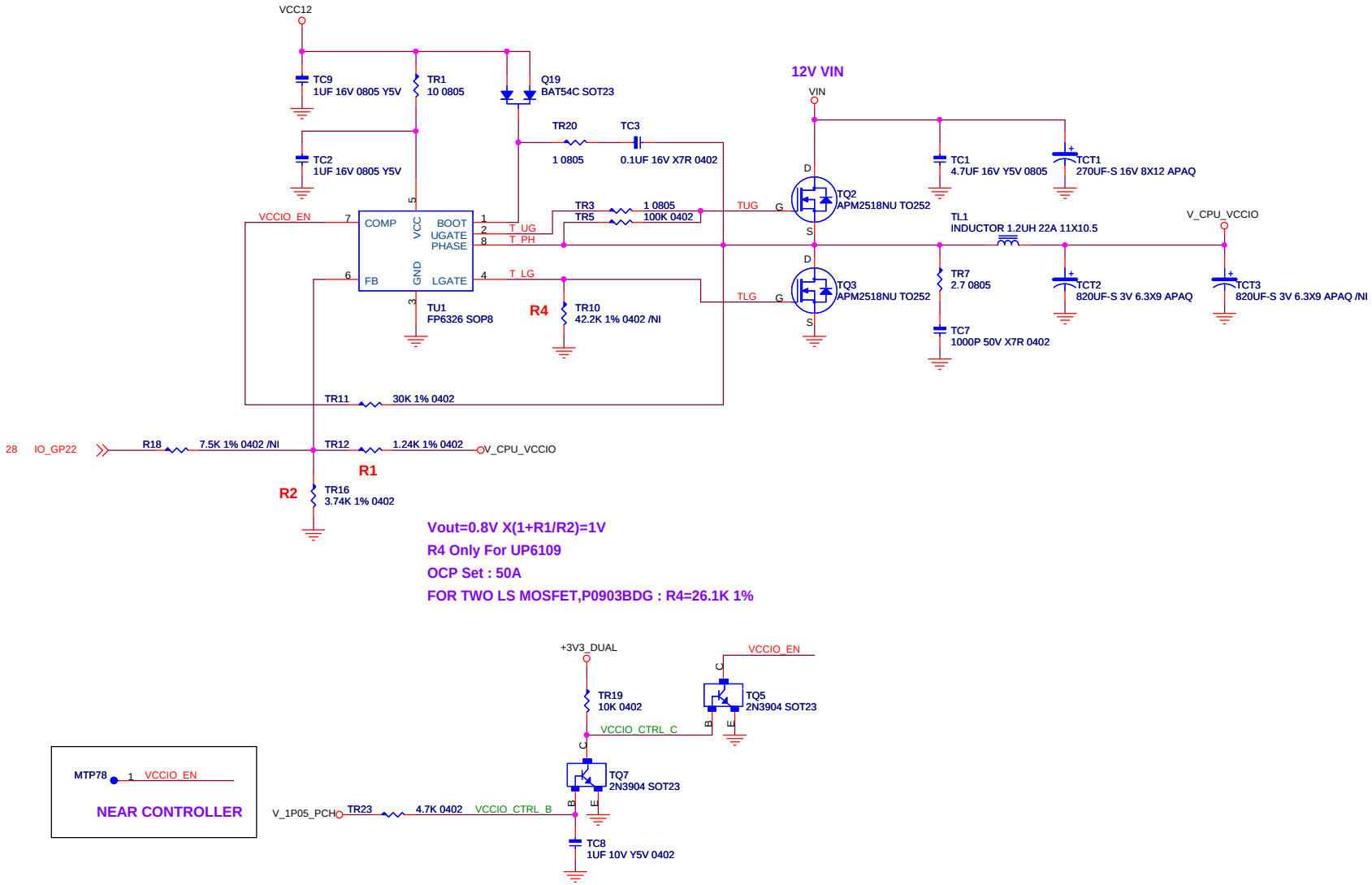

映泰股份有限公司
BIOSTAR GROUP

Title	VTT DC-DC Conver	
Size: B	Document Number: IH61X-MHS	Rev: 7.0
Date: Tuesday, April 10, 2012	Sheet 37 of 41	

ISL6363CRZ 2+1 Phase design

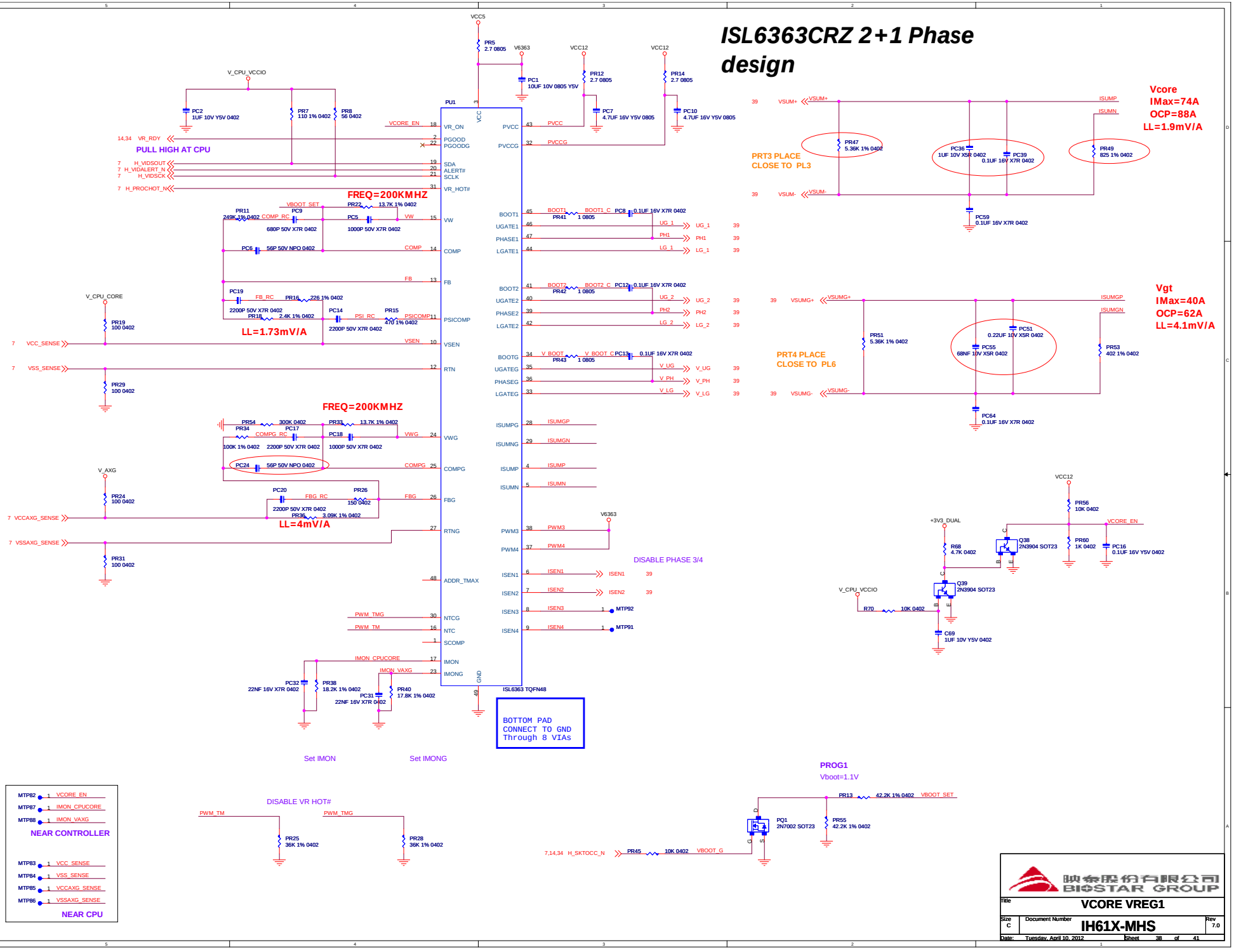

Title	VCORE VREG1		
Size C	Document Number IH61X-MHS		Rev 7.0
Date: Tuesday, April 10, 2012		Sheet 38 of 41	

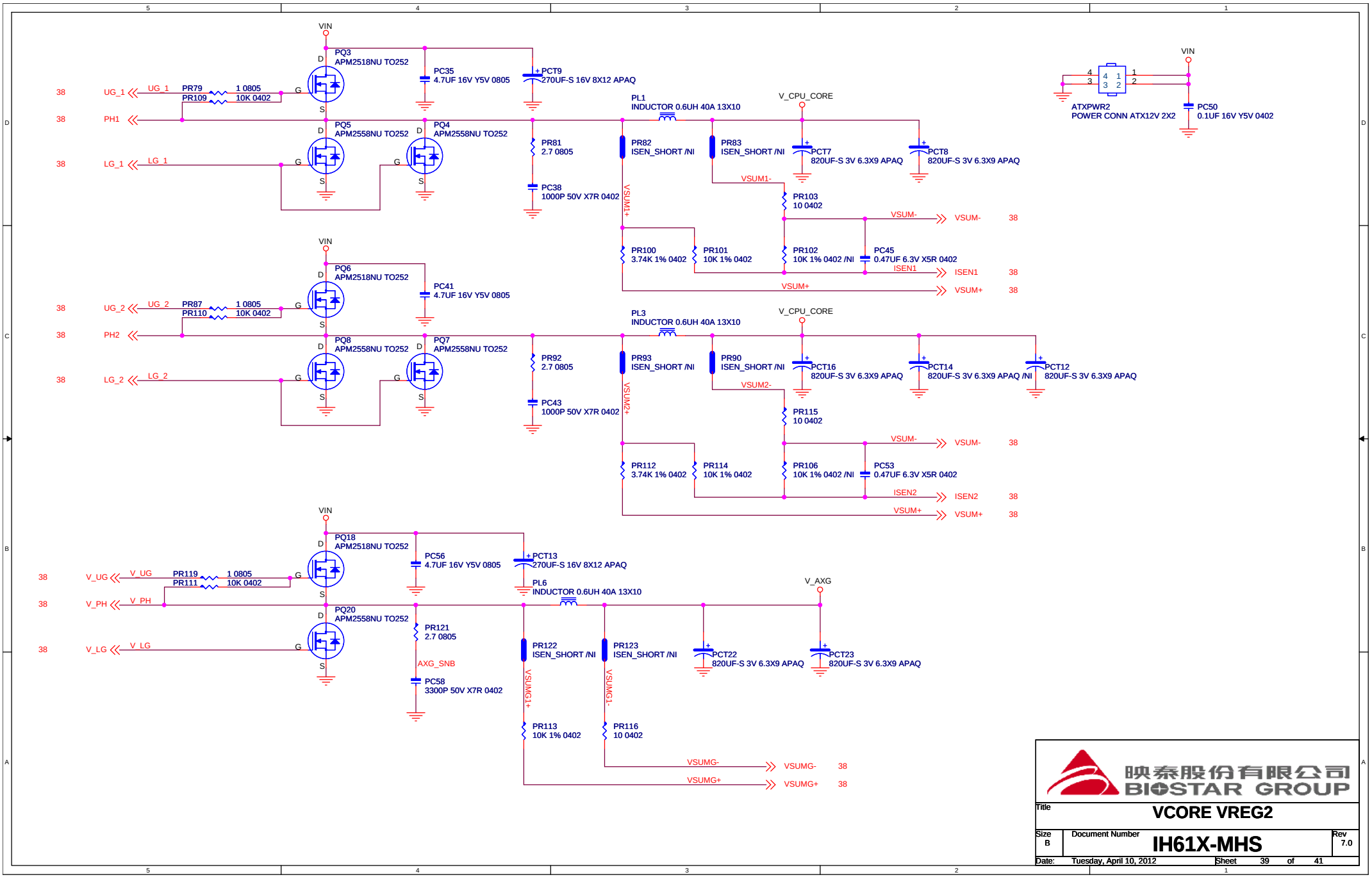

映泰股份有限公司
BIOSTAR GROUP

Title	VCORE VREG2	
Size B	Document Number IH61X-MHS	Rev 7.0
Date: Tuesday, April 10, 2012	Sheet 39 of 41	

V_CPU_CORE	OV_CPU0	OV_CPU1
DEFAULT	1	1
+5%	0	1
+10%	1	0
+15%	0	0

V_AXG	OV_AXG	OV_AXG1
DEFAULT	1	1
+5%	0	1

V_CPU_VCCIO	OV_VCCIO0	OV_VCCIO1
1.05V(DEFAULT)	1	1
1.1V	0	1
1.15V	1	0
1.2V	0	0

14 PCH_GP31 R20 7.5K 1% 0402 OV_VSM 36

V_SM	OV_VSM0
1.5V(DEFAULT)	1
1.6V	0

映泰股份有限公司
BIOSTAR GROUP

Title: OVER VOLTAGE

Size: Custom | Document Number: IH61X-MHS | Rev: 7.0

Date: Tuesday, April 10, 2012 | Sheet 40 of 41

MH1
PAD200-8 /NI

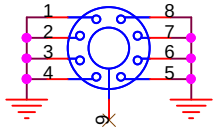

MH2
PAD200-8 /NI

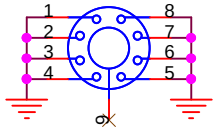

MH3
PAD200-8 /NI

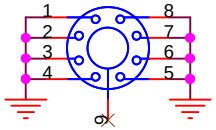

MH4
PAD200-8 /NI

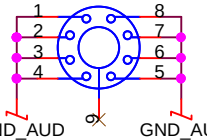

GND_AUD

MH5
PAD200-8 /NI

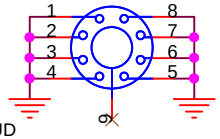

GND_AUD

MH6
PAD200-8 /NI

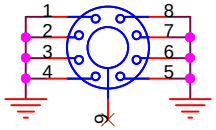

PCB

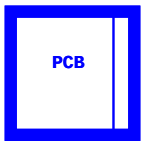

IH61X-MHS V7.0

(CPU1)

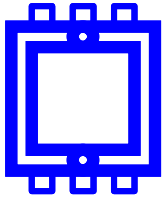

LGA 1156 FRAME

(PCH1)



SB SMALL-AMD

(BAT1)



3V BATTERY SONY

(YY1)
X'TAL WIRE



JCMOS1(1_2)
JUMPER 2P B



(SPI2)



EN25Q32A-100HIP DIP

(LB1)



IH61X-MHS-LABEL V70

Impedance Testing Coupon

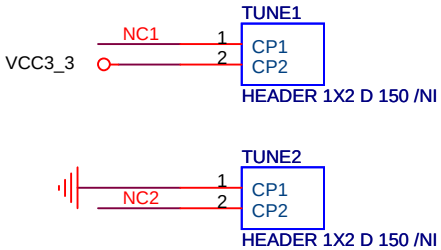

New PANEL1
PANEL1 2*8

YELLOW COLOR

映泰股份有限公司
BIOSTAR GROUP

Title	BOM	
Size A	Document Number IH61X-MHS	Rev 7.0
Date: Tuesday, April 10, 2012	Sheet 41 of 41	