TITLE	SHEET
Cover Sheet	1
Block Diagram	2
General Spec.	3
Change List	4
Processor	5,6
North Bridge	7,8,9,10,11
South Bridge	12,13,14
Clock	15
DDR2 Dimms	16,17,18
PCIX16 Slot	19
PCIX1 Slot	20
PCI Slot	21,22
IDE Connector	23
Super I/O	24
ATX Power & Bypass CAP	25
BACK COM / LPT Ports , PS/2 ,USB ,BIOS	26
Front PANEL / USB , FANS	27
Codec / AUDIO CONNECTORS	28,29
VCC_CORE DC-DC Converter	30
Miscellaneous DC-DC Converters	31,32
PCI-Based LAN CHIP	33
GPIO OV	34
BOM	35

IP43A-A7S

(IP43 LGA775)

Intel P45 + ICH10

VER:6.0

映泰股份有限公司
BIOSTAR GROUP

Title: COVER SHEET

Size: Custom | Document Number: IP43A-A7S | Rev: 6.0

Date: Tuesday, July 28, 2009 | Sheet 1 of 35

BLOCK DIAGRAM

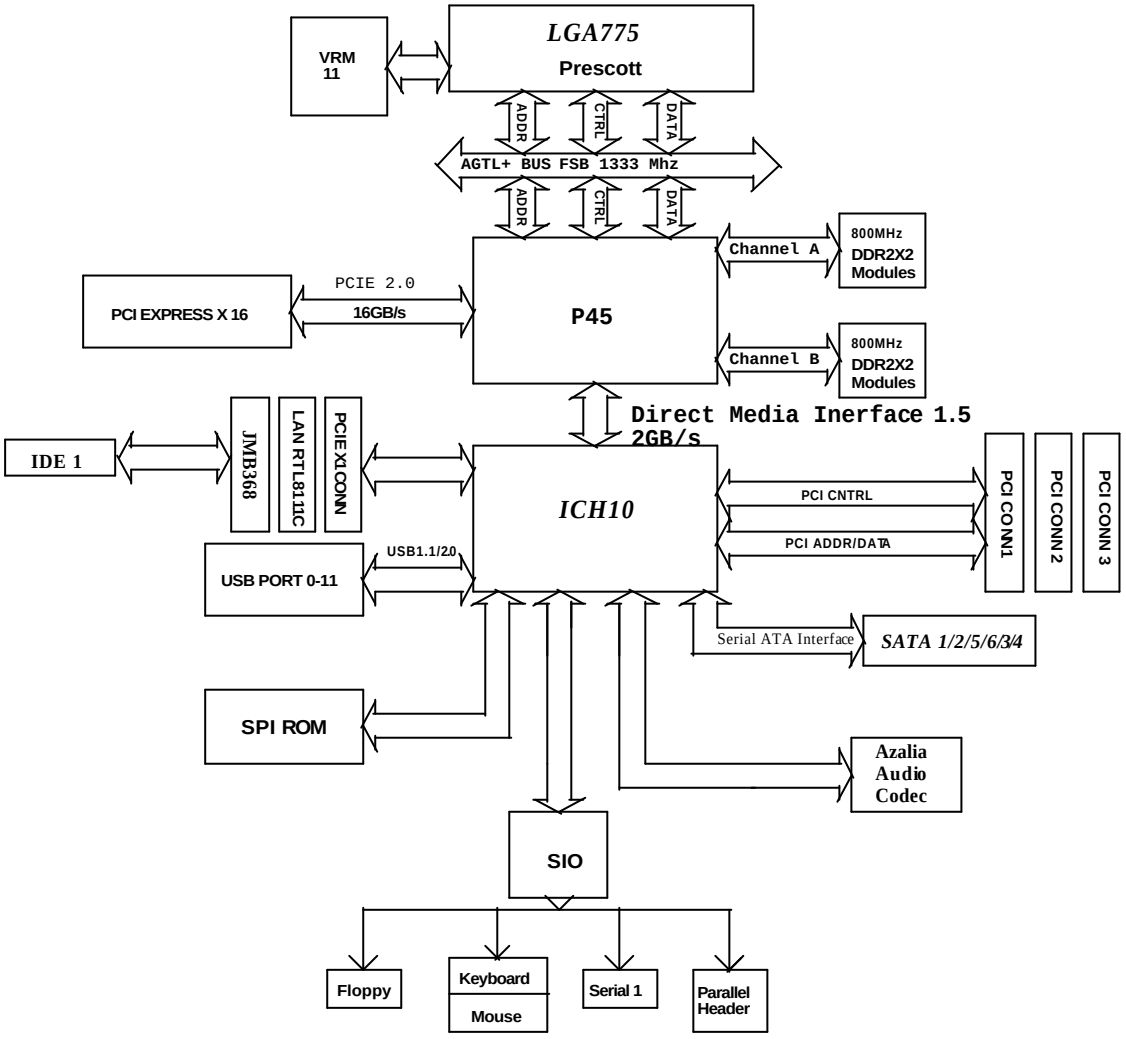

映泰股份有限公司
BIOSTAR GROUP

Title: BLOCK DIAGRAM		
Size: Custom	Document Number: IP43A-A7S	Rev: 6.0
Date: Tuesday, July 28, 2009	Sheet 2 of 35	

PCI Solt	IDE SEL	INT#	GNT#	REQ#	CLOCK
1	17	A	0	0	PCLK_0
2	18	B	1	1	PCLK_1
3	21	C	2	2	PCLK1_1

Chips	IDE SEL	INT#	GNT#	REQ#	CLOCK	GPIO
LAN	19	D	3	3	PCLK_3	
ICH8						
S I/O						
BIOS						
ANTI-POP						
DIMM-OV						
CPU-OV						
SATA-LED						
S I/O						
1394						

IP45A-A7S

1. CPU --- INTEL P4-775(4-Phase Power)
2. CHIPSET --- Intel P45 + ICH10
3. MEMORY --- 4 DDR2(Max. 8GB)
4. SLOTS --- PE16x1, PE1x1, PCIx3
5. IDE --- JMB368 PCIE Interface
6. CODEC --- Realtek ALC662 5.1Channel Audio
7. LAN --- Realtek RTL8111C
8. PCB Size --- ATX,305.0mmx220.0mm, 4-Layer

22U/25DE	5*7 mm
100U/16DE	6.3*11 mm
220U/10DE	6.3*11 mm
470U/16DE	8*11 mm
1000U/10DE	8*14 mm
1500U/16DE	10*25 mm
3300U/25DE	10*25 mm

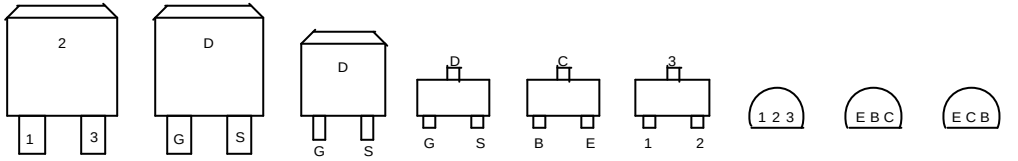

TO-263	TO-263	TO-252	SOT-23	SOT-23	SOT-23	T0-92	T0-92	T0-92
B55QS03	2SK3296	20N03 TM3055TL-S 45N03 FDD6030L	2N7002 SI2303S SI2301S	2N3904 2N3906 MMBT2907A	BAT54C BAT54S	LM431 78L05-D LM432	2N2222A 2N2097A	HSD882-D

映泰股份有限公司
BIOSTAR GROUP

Title: GENERAL SPEC

Size	Document Number	Rev
Custom	IP43A-A7S	6.0

Date: Tuesday, July 28, 2009 Sheet 3 of 35

映泰股份有限公司
BIOSTAR GROUP

Title: CHANGE LIST

Size: Custom | Document Number: IP43A-A7S | Rev: 6.0

Date: Tuesday, July 28, 2009 | Sheet 4 of 35

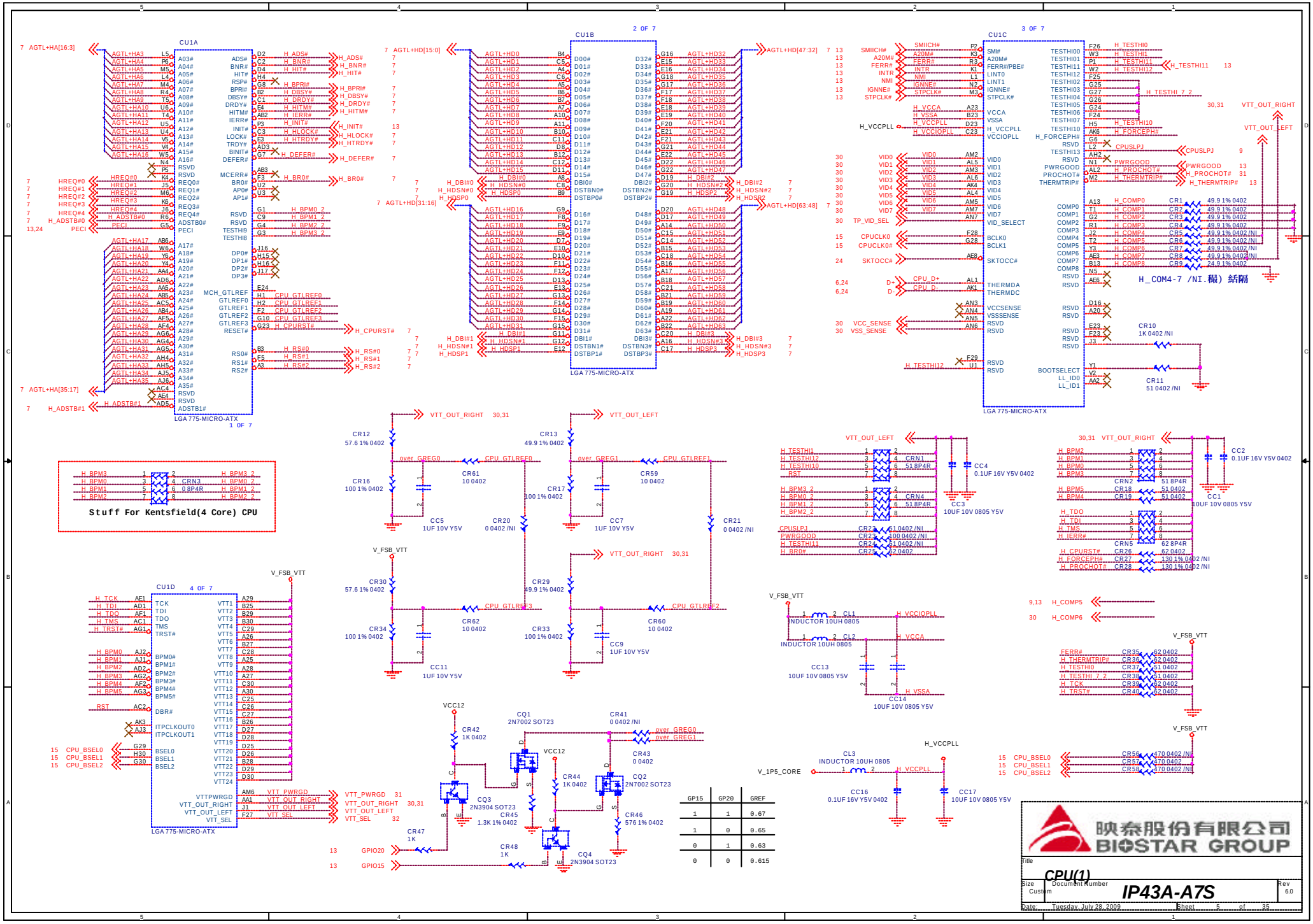

GP15	GP20	GREF
1	1	0.67
1	0	0.65
0	1	0.63
0	0	0.615

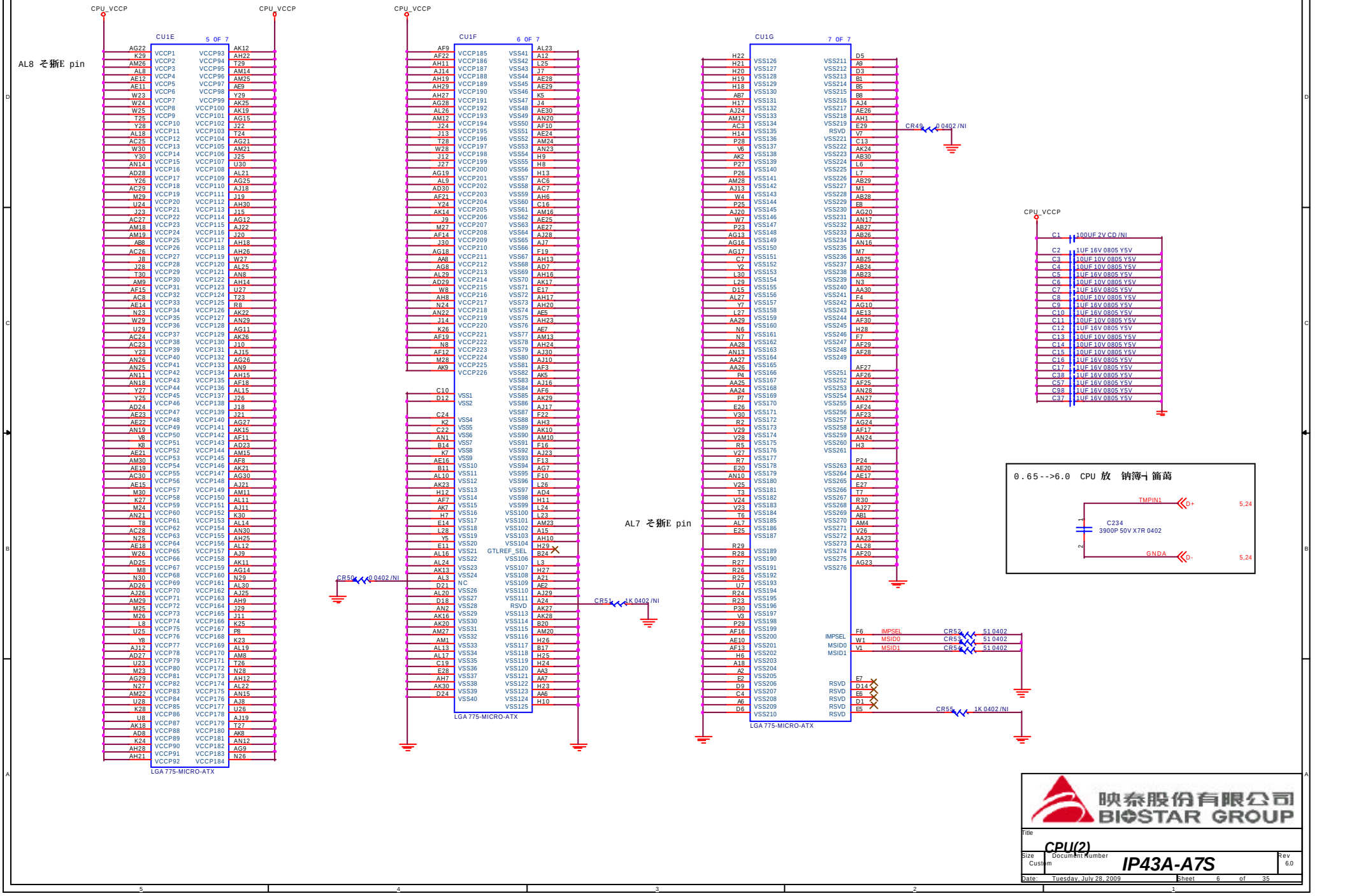

CPU_VCCP
CU1E
5 OF 7
AL8 そ狮E pin
LGA 775-MICRO-ATX
CU1F
6 OF 7
CR50 0 0402 /NI
CR51 1K 0402 /NI
LGA 775-MICRO-ATX
CU1G
7 OF 7
AL7 そ狮E pin
CR49 0 0402 /NI
CR52 51 0402
CR53 51 0402
CR54 51 0402
CR55 1K 0402 /NI
LGA 775-MICRO-ATX
C1 100UF 2V CD /NI
0.65-->6.0 CPU 放 钠簿┤ 箇蔺
TMPIN1
D+
5,24
C234
3900P 50V X7R 0402
GNDA
D-
5,24
映泰股份有限公司
BIOSTAR GROUP
Title
CPU(2)
Size
Custom
Document Number
IP43A-A7S
Rev
6.0
Date: Tuesday, July 28, 2009
Sheet 6 of 35

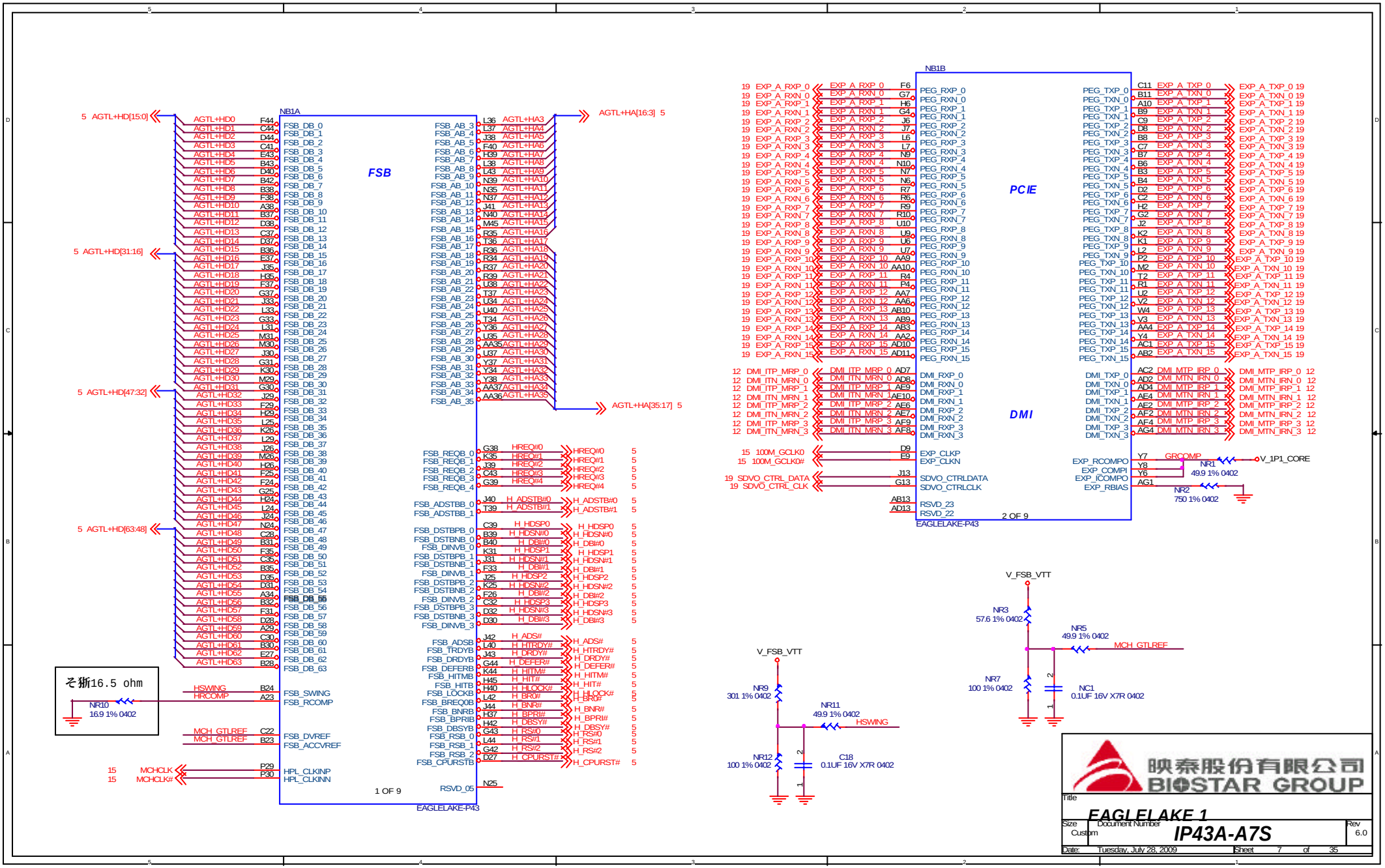
NB1A
FSB
1 OF 9
EAGLELAKE-P43
NB1B
PCIE
DMI
2 OF 9
EAGLELAKE-P43
AGTL+HD[15:0]
AGTL+HD[31:16]
AGTL+HD[47:32]
AGTL+HD[63:48]
AGTL+HA[16:3]
AGTL+HA[35:17]
V_FSB_VTT
NR3 57.6 1% 0402
NR5 49.9 1% 0402
MCH_GTLREF
NR7 100 1% 0402
NC1 0.1UF 16V X7R 0402
NR9 301 1% 0402
NR11 49.9 1% 0402
HSWING
NR12 100 1% 0402
C18 0.1UF 16V X7R 0402
NR1 49.9 1% 0402
NR2 750 1% 0402
V_1P1_CORE
NR10 16.9 1% 0402
HSWING
HRCOMP
MCH_GTLREF
MCHCLK
MCHCLK#
RSVD_05
BIOSTAR GROUP
EAGLELAKE 1
IP43A-A7S
Size Custom
Document Number
Rev 6.0
Date: Tuesday, July 28, 2009
Sheet 7 of 35

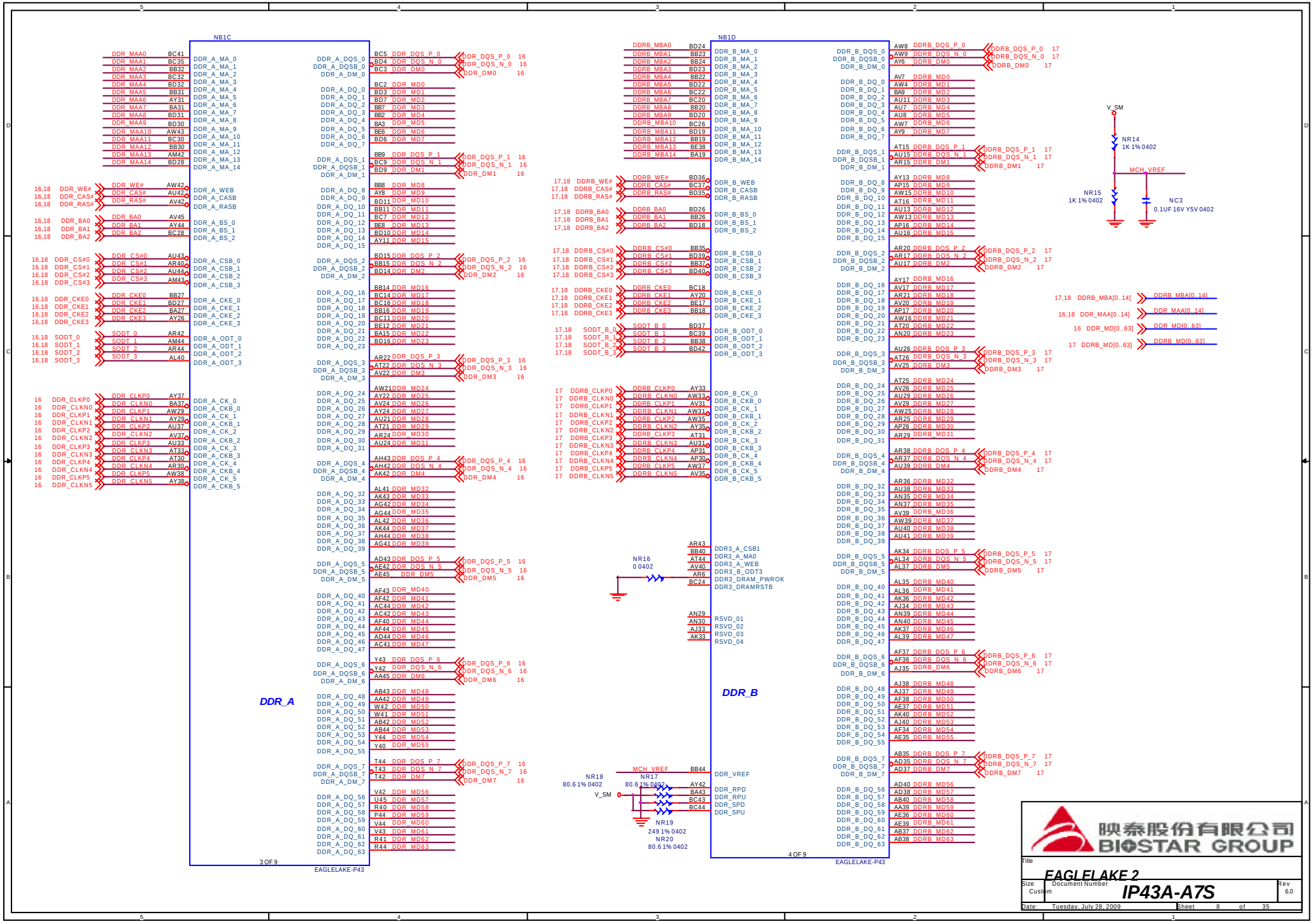
NB1C
DDR_A
3 OF 9
EAGLELAKE-P43
NB1D
DDR_B
4 OF 9
EAGLELAKE-P43
V_SM
NR14
1K 1% 0402
MCH_VREF
NR15
1K 1% 0402
NC3
0.1UF 16V Y5V 0402
NR16
0 0402
NR17
80.6 1% 0402
NR18
80.6 1% 0402
NR19
249 1% 0402
NR20
80.6 1% 0402
映泰股份有限公司
BIOSTAR GROUP
Title
EAGLELAKE 2
Size
Custom
Document Number
IP43A-A7S
Rev
6.0
Date:
Tuesday, July 28, 2009
Sheet
8
of
35

BSEL TABLE			
2	1	0	PSB FREQUENCY
0	0	0	267 MHZ (1066)
0	0	1	133 MHZ (533)
0	1	0	200 MHZ (800)
1	0	0	333 MHZ (1333)
1	1	0	400 MHZ (1600)

GMCH STRAPS TABLE		
PIN	H	L
MTYPE	DDR2	DDR3
EXP_SLR	NORMAL	RESERVE
EXP_EN	CONCURRENT	NON-CONCURRENT
TCEN	ENABLE	DISABLE

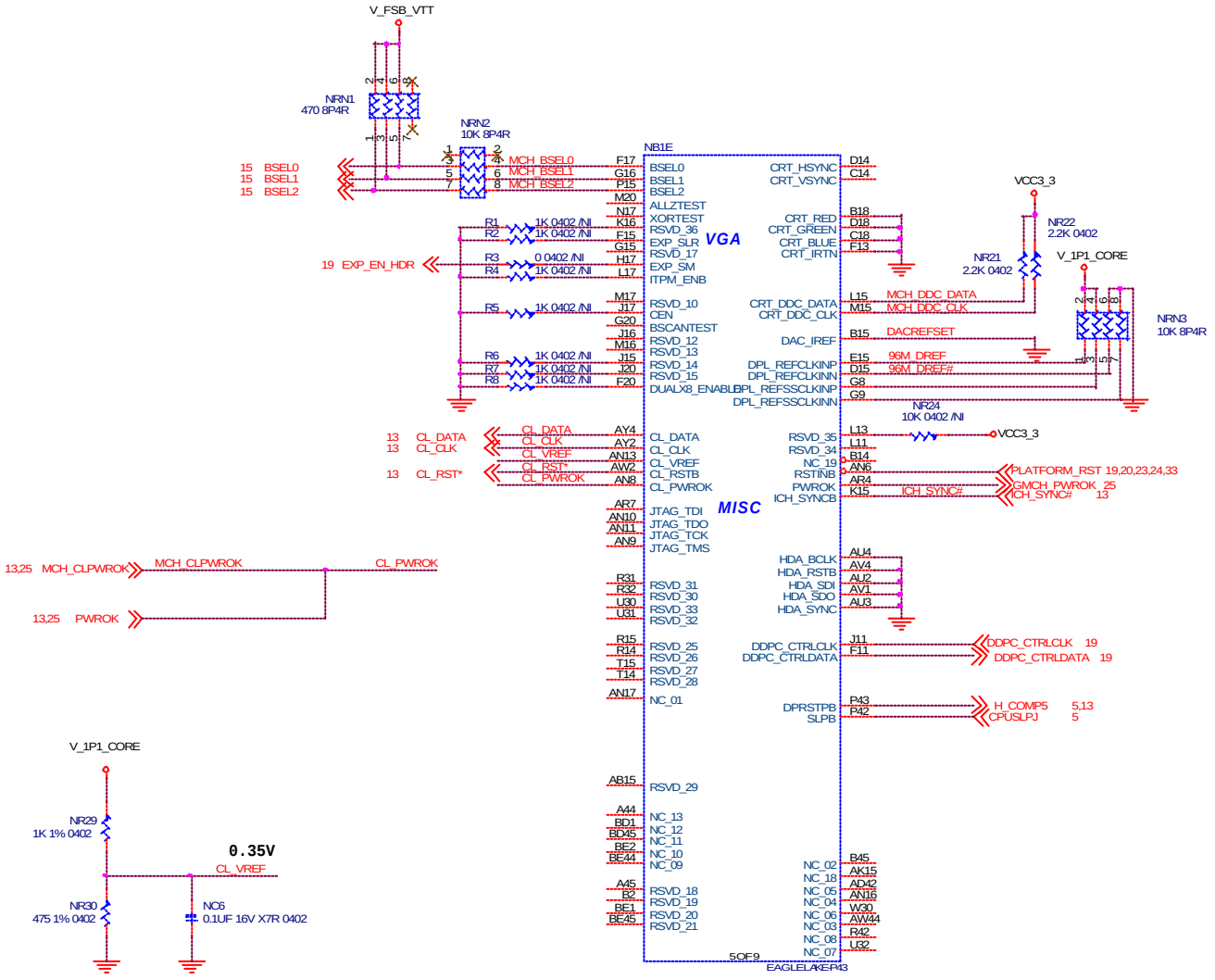

映泰股份有限公司
BIOSTAR GROUP

Title: EAGLELAKE 3

Size: Custom | Document Number: IP43A-A7S | Rev: 6.0

Date: Tuesday, July 28, 2009 | Sheet 9 of 35

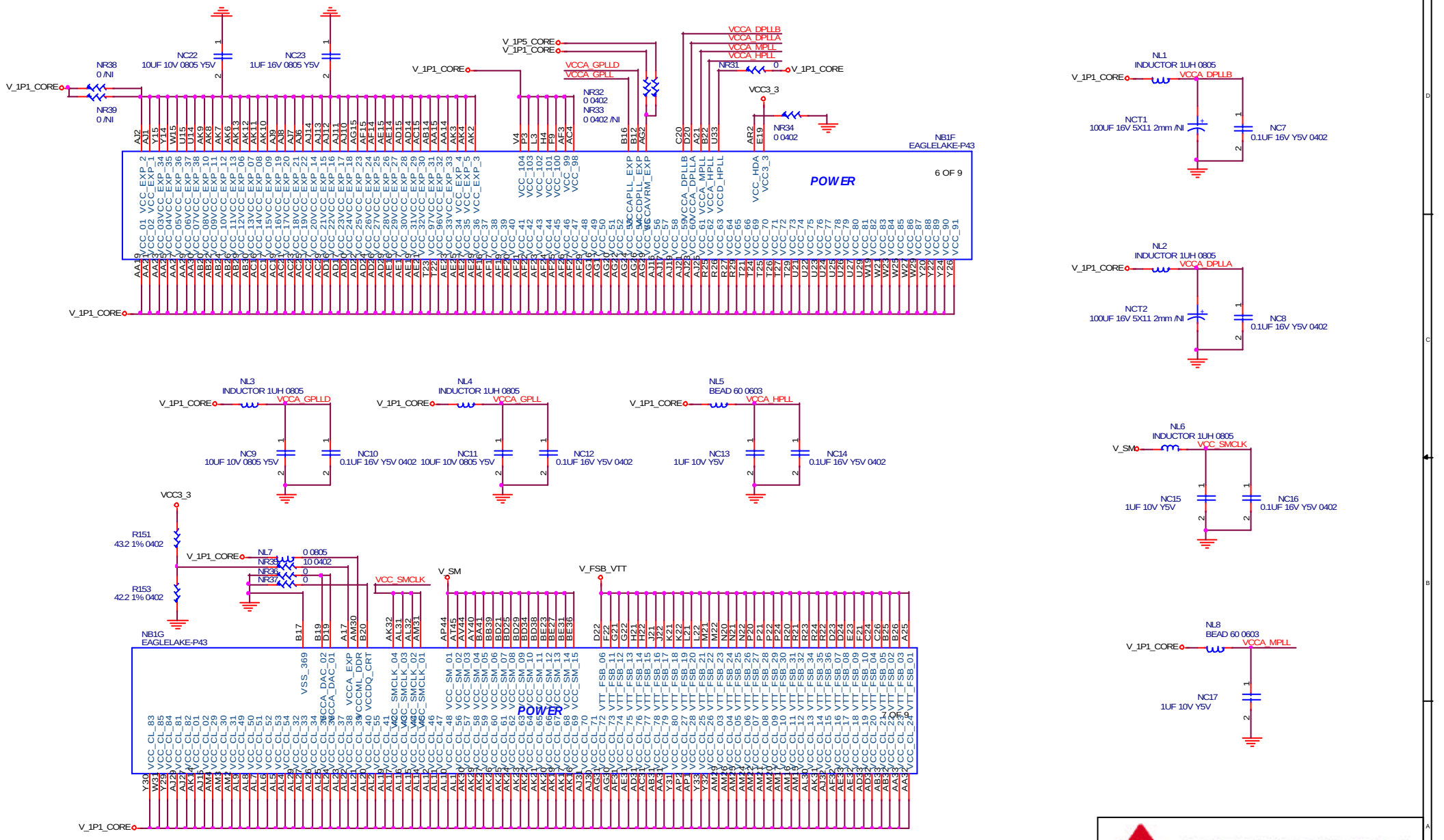

映泰股份有限公司
BIOSTAR GROUP

Title	EAGLELAKE 4	
Size: Custom	Document Number: IP43A-A7S	Rev: 6.0
Date: Tuesday, July 28, 2009	Sheet 10 of 35	

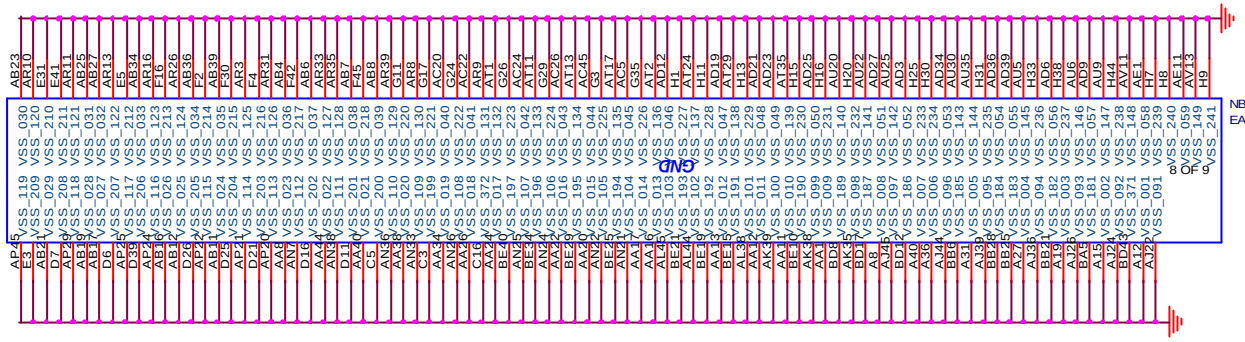

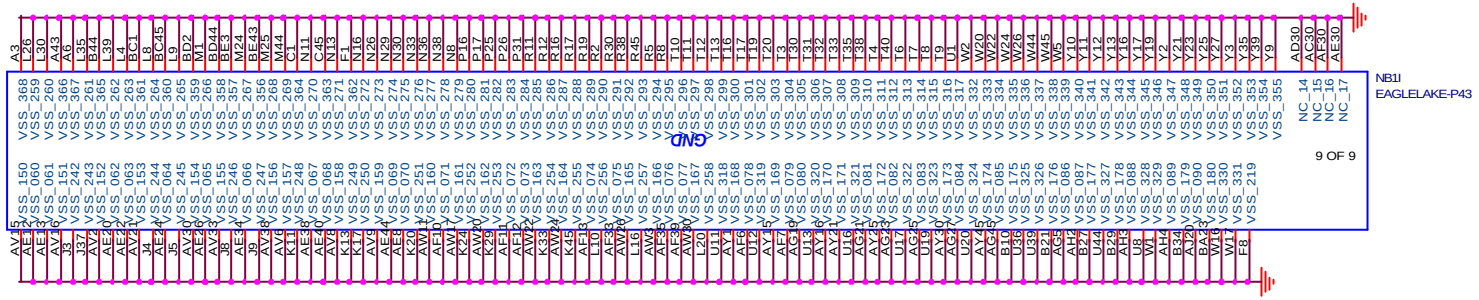

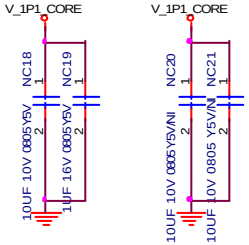

映泰股份有限公司
BIOSTAR GROUP

Title: EAGLELAKE 5

Size	Document Number	Rev
Custom	IP43A-A7S	6.0

Date: Tuesday, July 28, 2009 Sheet 11 of 35

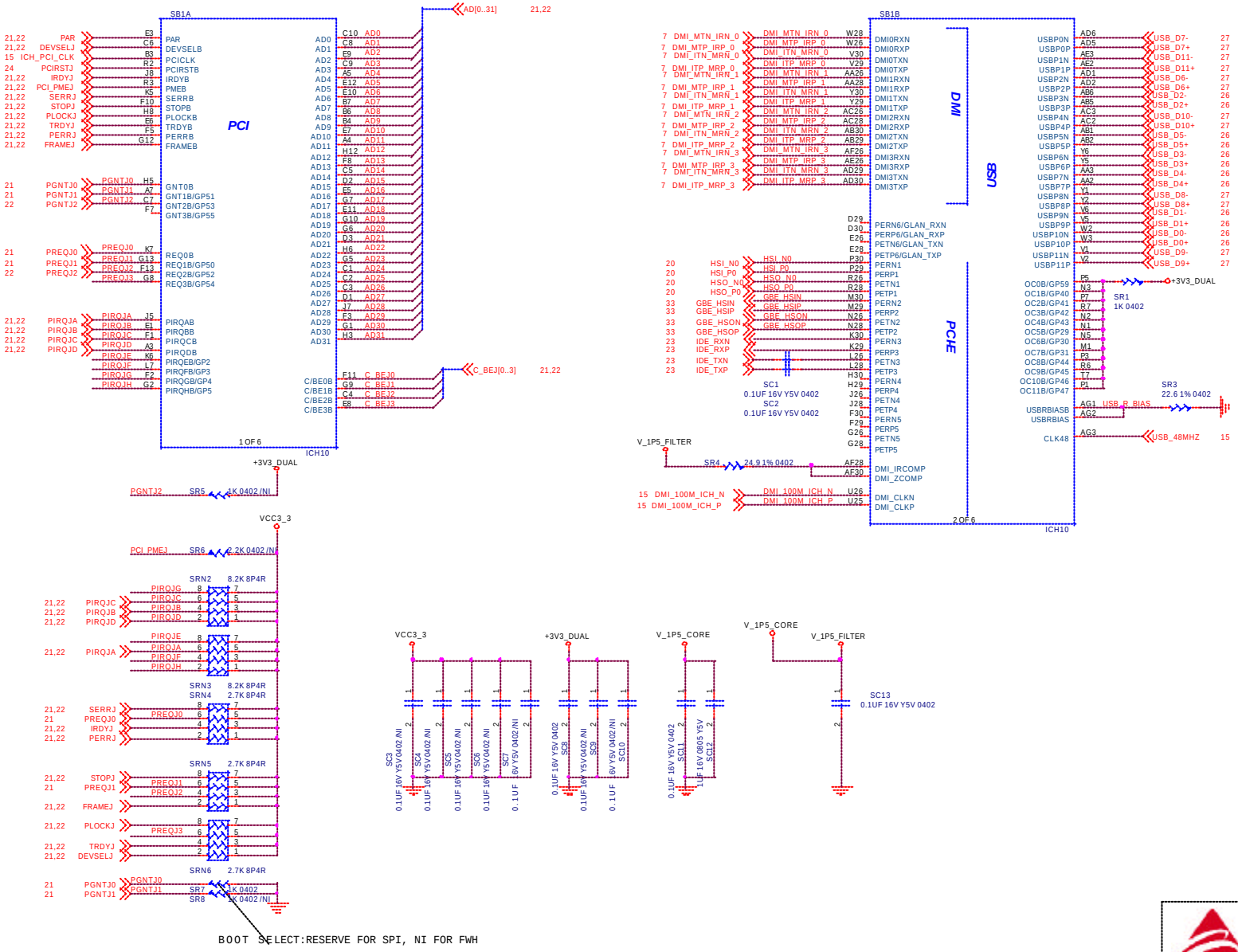
SB1A
PCI
ICH10
1 OF 6
AD[0..31]
C_BEJ[0..3]
+3V3_DUAL
SR5 4K 0402 /NI
VCC3_3
SR6 2.2K 0402 /NI
SRN2 8.2K 8P4R
SRN3 8.2K 8P4R
SRN4 2.7K 8P4R
SRN5 2.7K 8P4R
SRN6 2.7K 8P4R
SR7 1K 0402
SR8 1K 0402 /NI
BOOT SELECT:RESERVE FOR SPI, NI FOR FWH
SB1B
DMI
USB
PCIE
2 OF 6
ICH10
SC1 0.1UF 16V Y5V 0402
SC2 0.1UF 16V Y5V 0402
V_1P5_FILTER
SR4 24.9 1% 0402
SR1 1K 0402
SR3 22.6 1% 0402
USB_R_BIAS
USB_48MHZ
V_1P5_CORE
SC13 0.1UF 16V Y5V 0402
映泰股份有限公司
BIOSTAR GROUP
ICH10_1
IP43A-A7S
Rev 6.0
Tuesday, July 28, 2009
Sheet 12 of 35

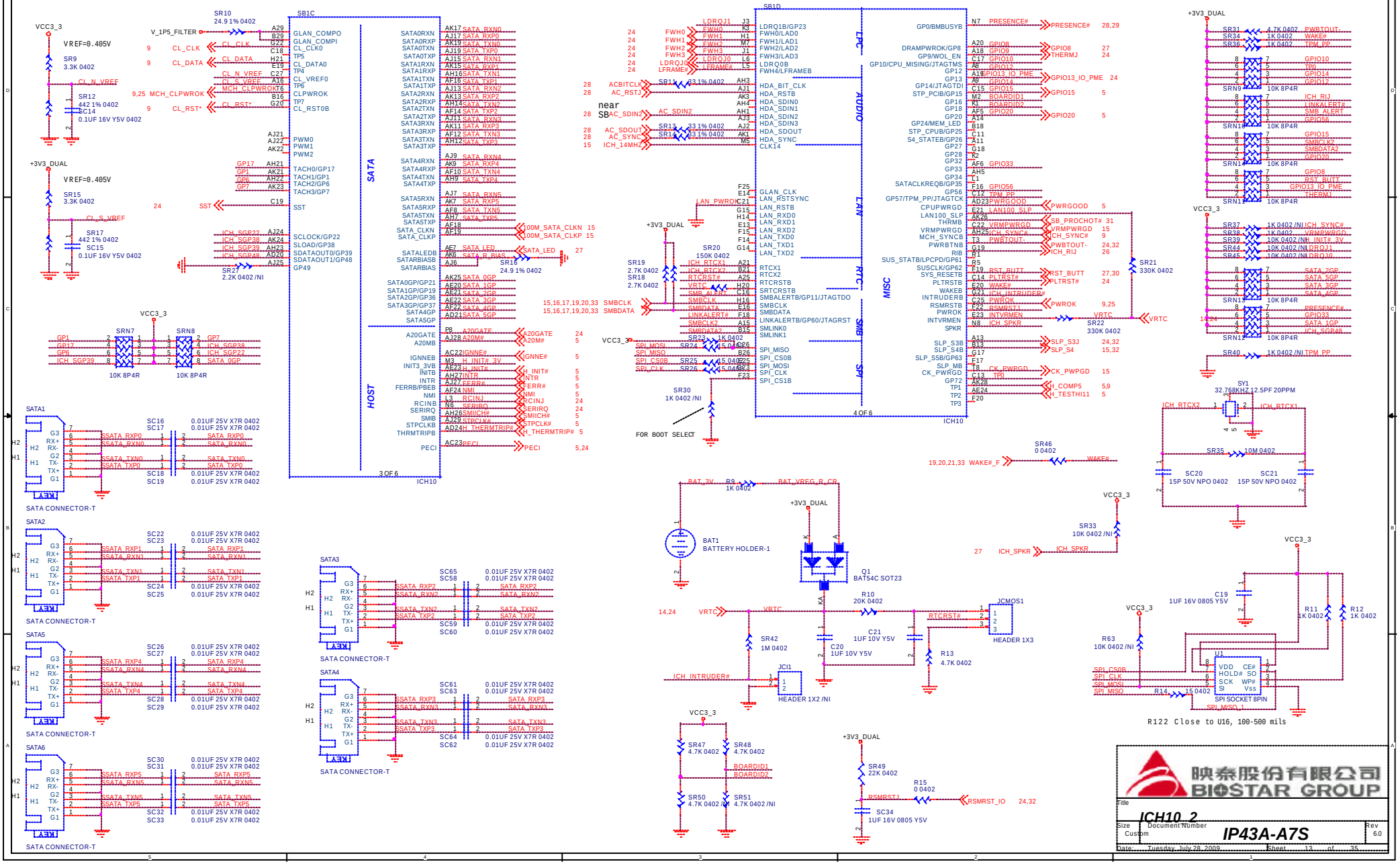
SB1C
SATA
HOST
SB1D
LPC
AUDIO
LAN
RTC
MISC
SMB
SPI
3 OF 6
4 OF 6
ICH10
SATA CONNECTOR-T
FOR BOOT SELECT
BAT1
BATTERY HOLDER-1
Q1
BAT54C SOT23
JCMOS1
HEADER 1X3
JCI1
HEADER 1X2 /NI
SPI SOCKET 8PIN
R122 Close to U16, 100-500 mils
映泰股份有限公司
BIOSTAR GROUP
ICH10_2
IP43A-A7S
Tuesday, July 28, 2009

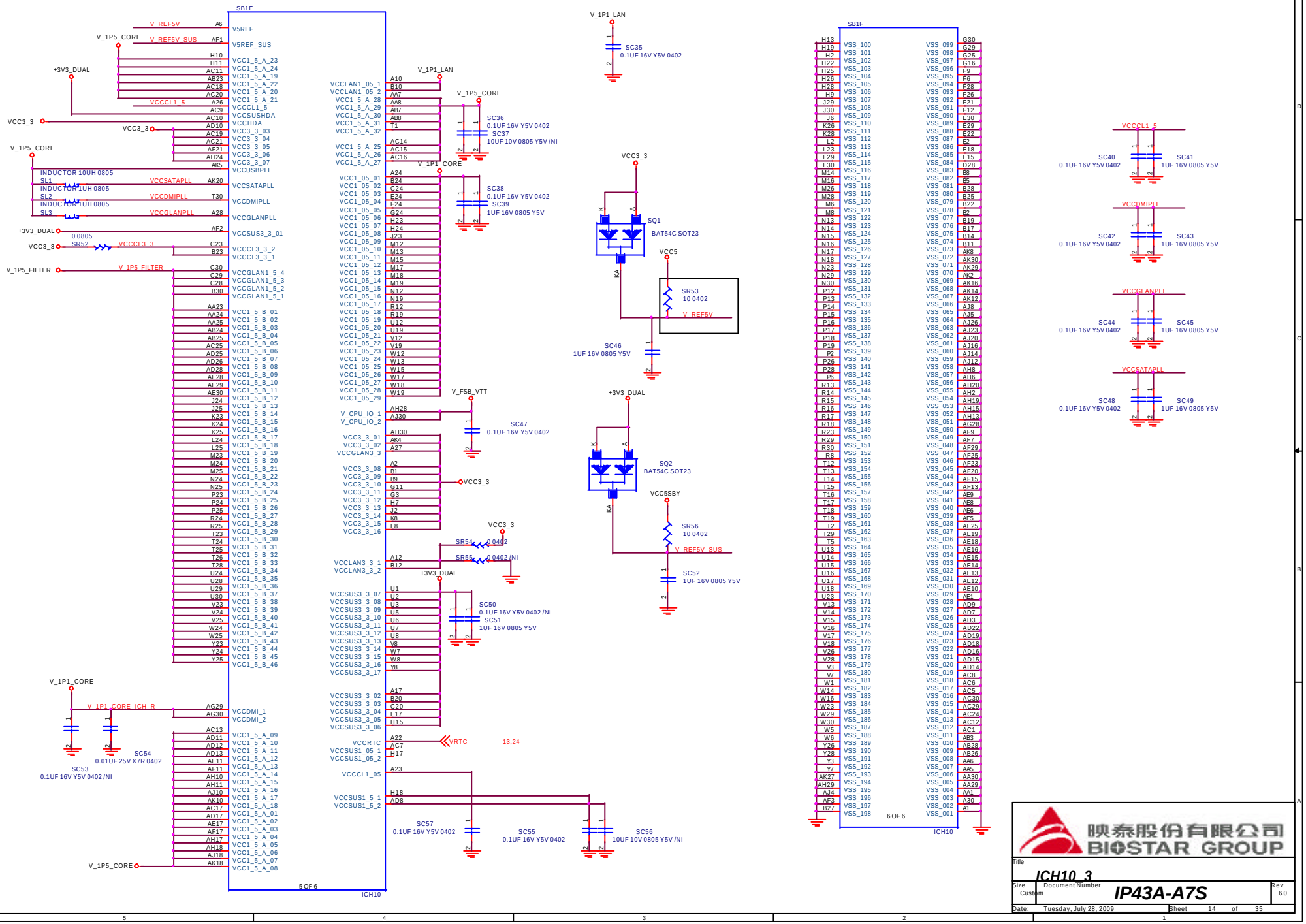

映泰股份有限公司
BIOSTAR GROUP

Title: ICH10_3

Size	Document Number	Rev
Custom	IP43A-A7S	6.0

Date: Tuesday, July 28, 2009 Sheet 14 of 35

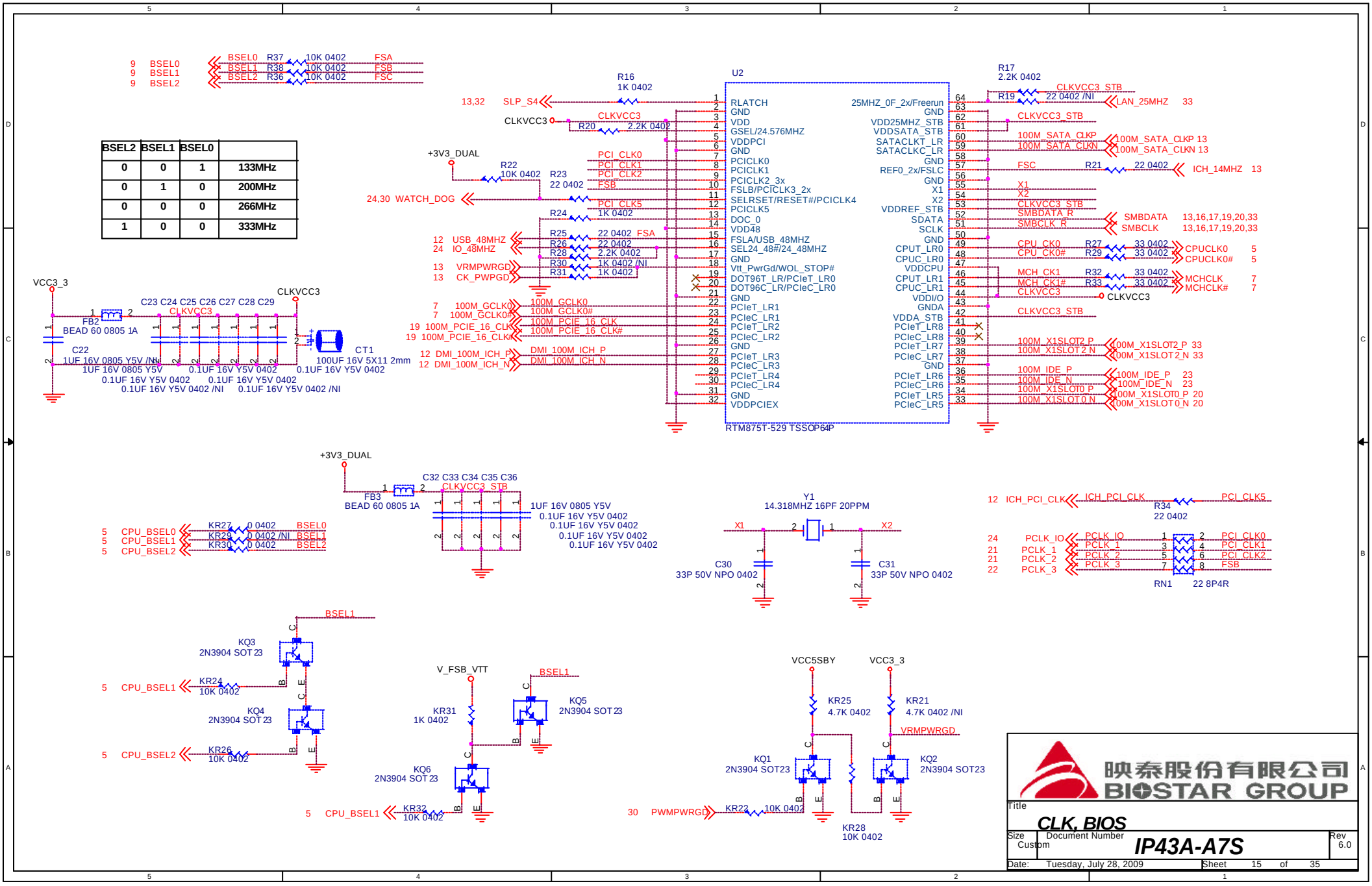
BSEL2 BSEL1 BSEL0
0 0 1 133MHz
0 1 0 200MHz
0 0 0 266MHz
1 0 0 333MHz
U2
RTM875T-529 TSSOP64P
CLK, BIOS
IP43A-A7S
映泰股份有限公司
BIOSTAR GROUP
Tuesday, July 28, 2009

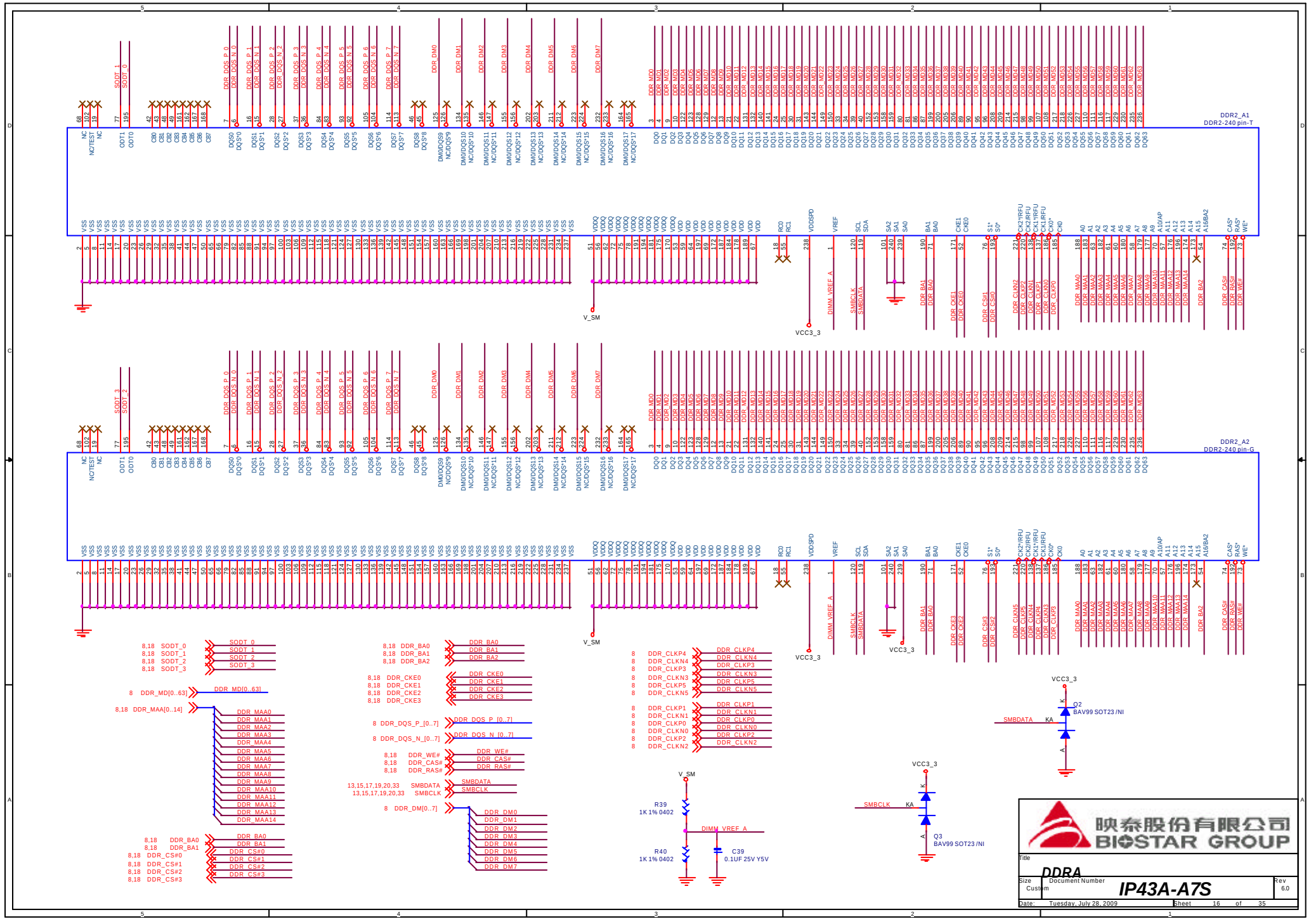
DDR2_A1
DDR2-240 pin-T
DDR2_A2
DDR2-240 pin-G
V_SM
VCC3_3
DIMM_VREF_A
SMBCLK
SMBDATA
SODT_0
SODT_1
SODT_2
SODT_3
DDR_MD[0..63]
DDR_MAA[0..14]
DDR_BA0
DDR_BA1
DDR_BA2
DDR_CKE0
DDR_CKE1
DDR_CKE2
DDR_CKE3
DDR_DQS_P_[0..7]
DDR_DQS_N_[0..7]
DDR_WE#
DDR_CAS#
DDR_RAS#
DDR_CS#0
DDR_CS#1
DDR_CS#2
DDR_CS#3
DDR_DM0
DDR_DM1
DDR_DM2
DDR_DM3
DDR_DM4
DDR_DM5
DDR_DM6
DDR_DM7
DDR_CLKP4
DDR_CLKN4
DDR_CLKP3
DDR_CLKN3
DDR_CLKP5
DDR_CLKN5
DDR_CLKP1
DDR_CLKN1
DDR_CLKP0
DDR_CLKN0
DDR_CLKP2
DDR_CLKN2
R39
1K 1% 0402
R40
1K 1% 0402
C39
0.1UF 25V Y5V
Q2
BAV99 SOT23 /NI
Q3
BAV99 SOT23 /NI
映泰股份有限公司
BIOSTAR GROUP
Title
DDRA
Size
Custom
Document Number
IP43A-A7S
Rev
6.0
Date:
Tuesday, July 28, 2009
Sheet
16
of
35

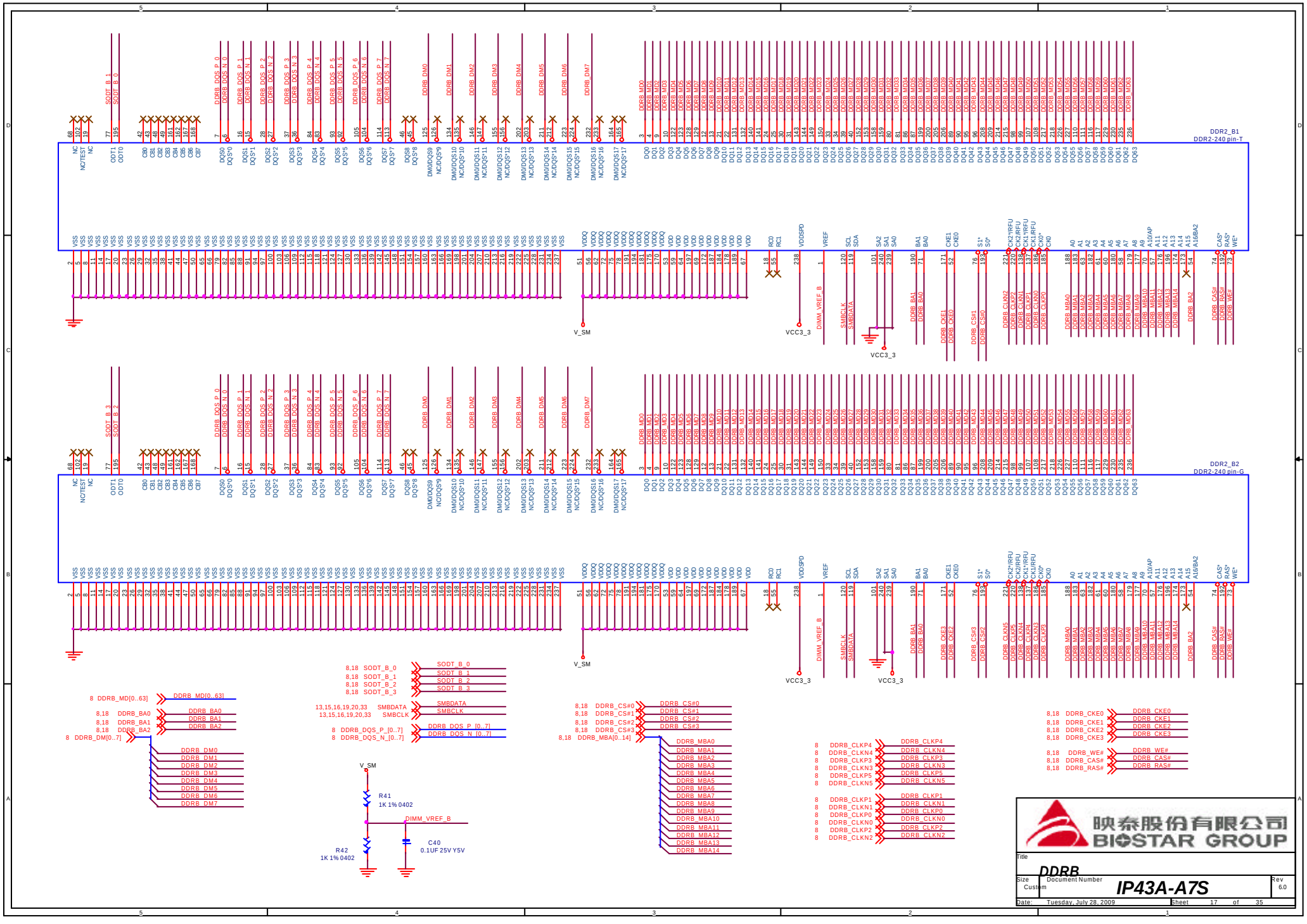
DDR2_B1
DDR2-240 pin-T
DDR2_B2
DDR2-240 pin-G
V_SM
VCC3_3
R41
1K 1% 0402
R42
1K 1% 0402
C40
0.1UF 25V Y5V
DIMM_VREF_B
映泰股份有限公司
BIOSTAR GROUP
Title
DDRB
Size
Custom
Document Number
IP43A-A7S
Rev
6.0
Date:
Tuesday, July 28, 2009
Sheet
17
of
35

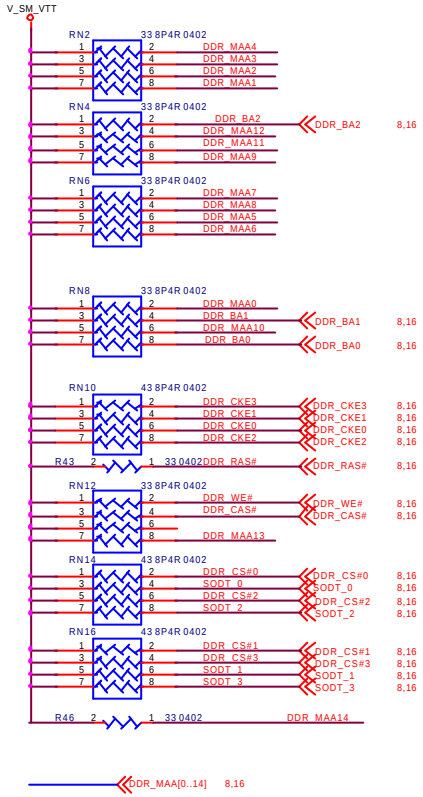

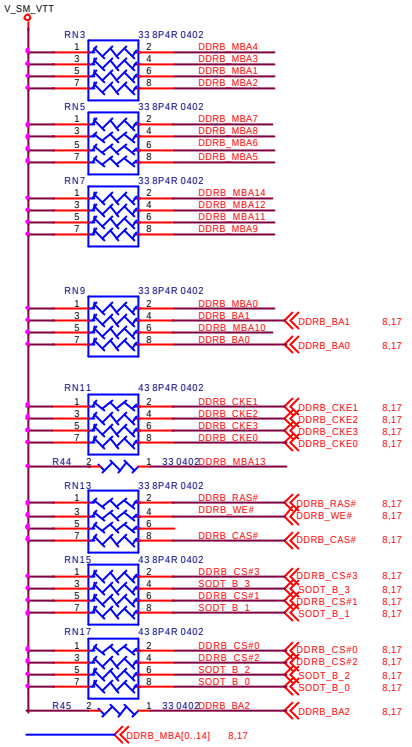

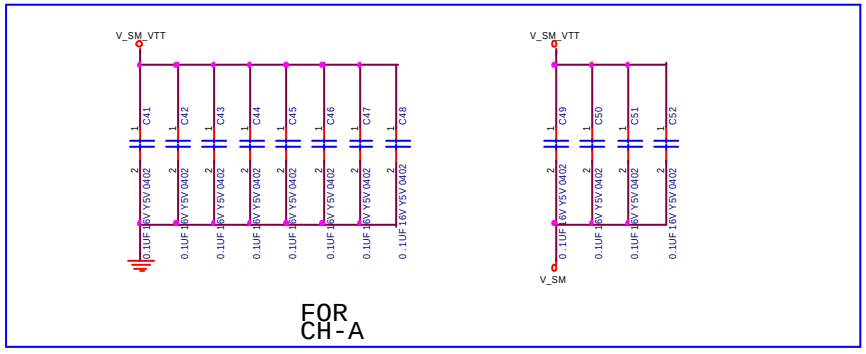

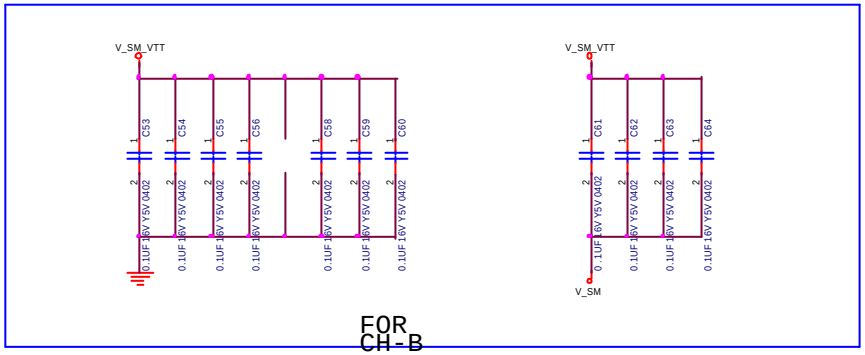

映泰股份有限公司
BIOSTAR GROUP

Title: DDR TERMINATION

Size	Document Number	Rev
Custom	IP43A-A7S	6.0

Date: Tuesday, July 28, 2009 Sheet 18 of 35

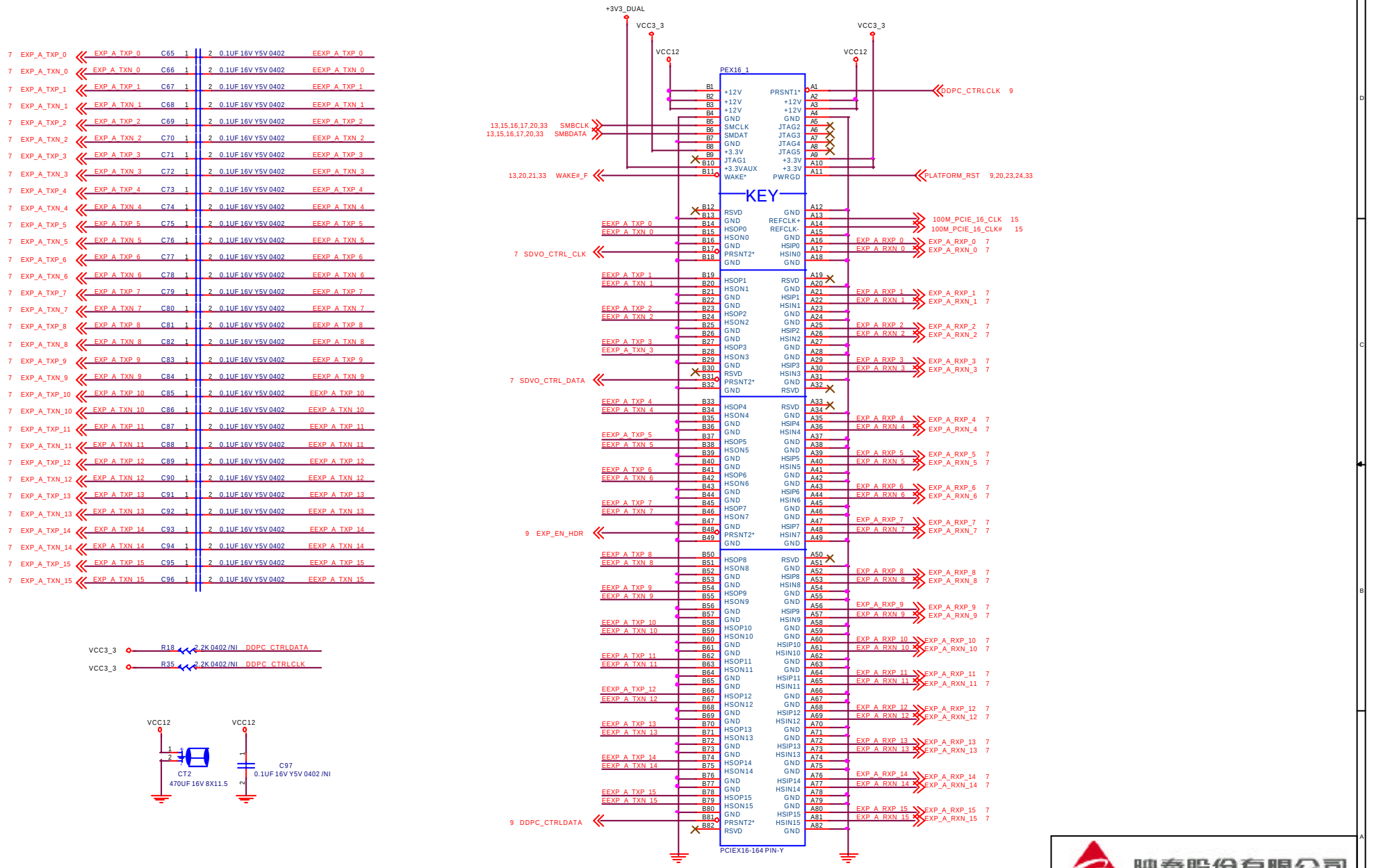

Title	PCIEX16 SLOT
Size	Custom
Document Number	IP43A-A7S
Rev	6.0
Date:	Tuesday, July 28, 2009
Sheet	19 of 35

映泰股份有限公司 BIOSTAR GROUP

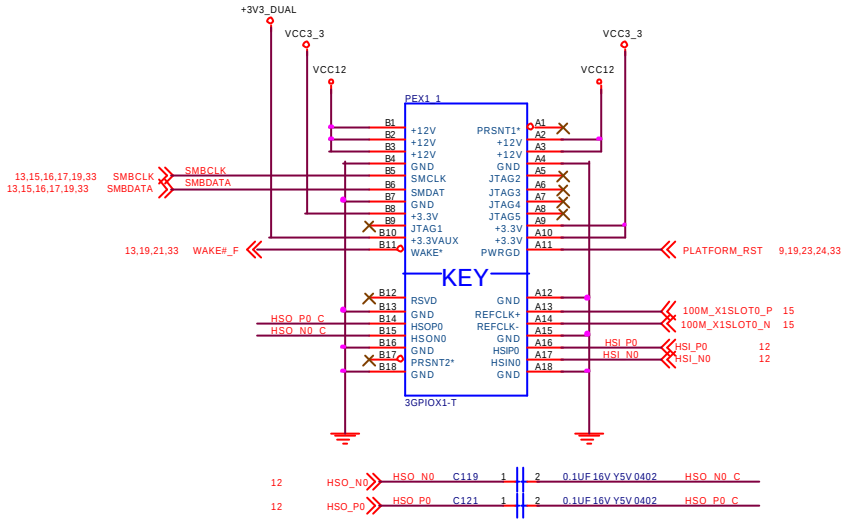

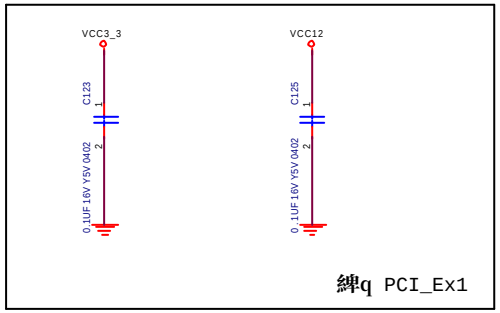

映泰股份有限公司
BIOSTAR GROUP

Title: PCIEX1 SLOT

Size: Custom | Document Number: IP43A-A7S | Rev: 6.0

Date: Tuesday, July 28, 2009 | Sheet 20 of 35

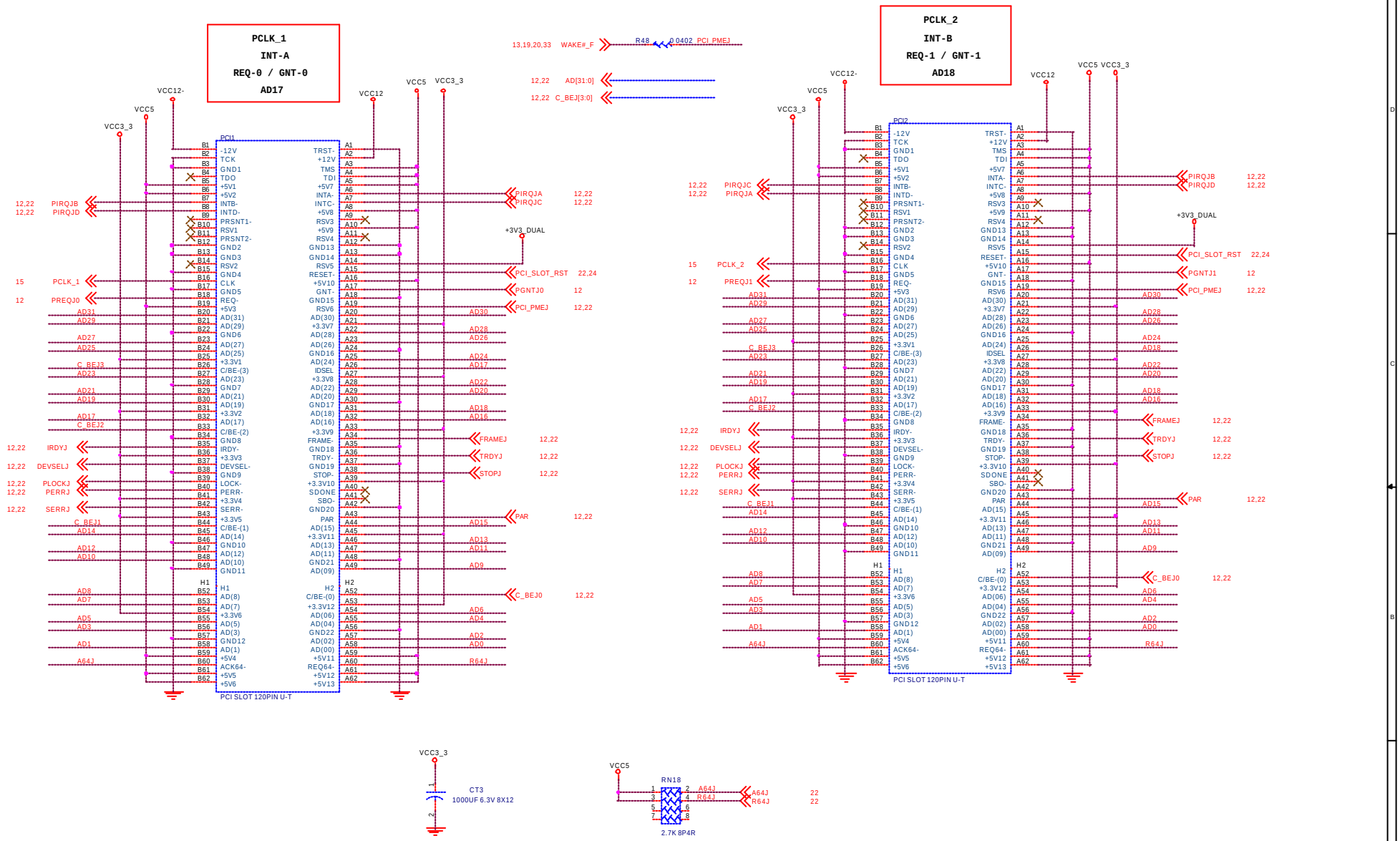

映泰股份有限公司
BIOSTAR GROUP

Title: PCI1/2 solt

Size: Custom | Document Number: IP43A-A7S | Rev: 6.0

Date: Tuesday, July 28, 2009 | Sheet 21 of 35

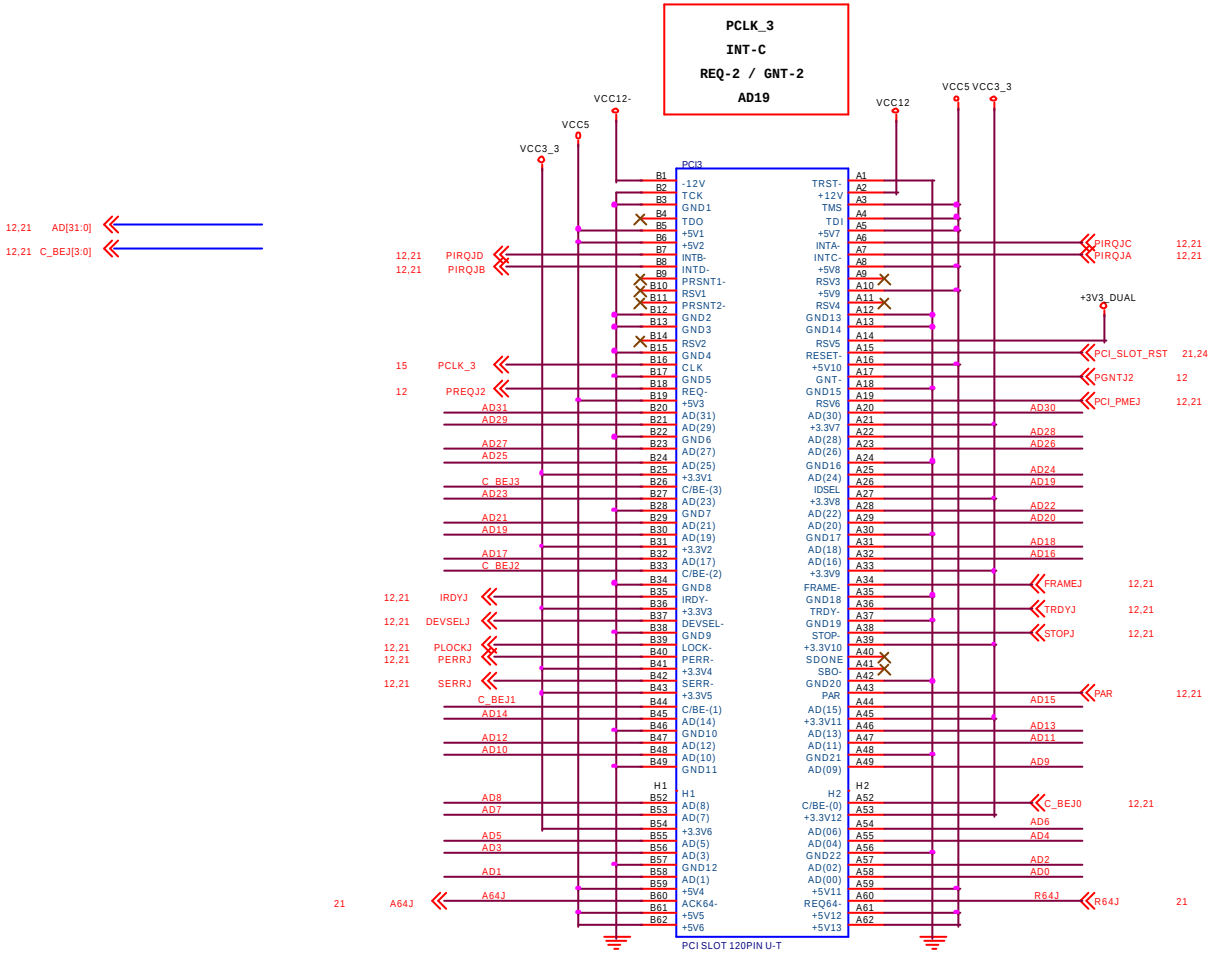

映泰股份有限公司
BIOSTAR GROUP

Title: PCI3 SLOT

Size	Document Number	Rev
Custom	IP43A-A7S	6.0

Date: Tuesday, July 28, 2009 Sheet 22 of 35

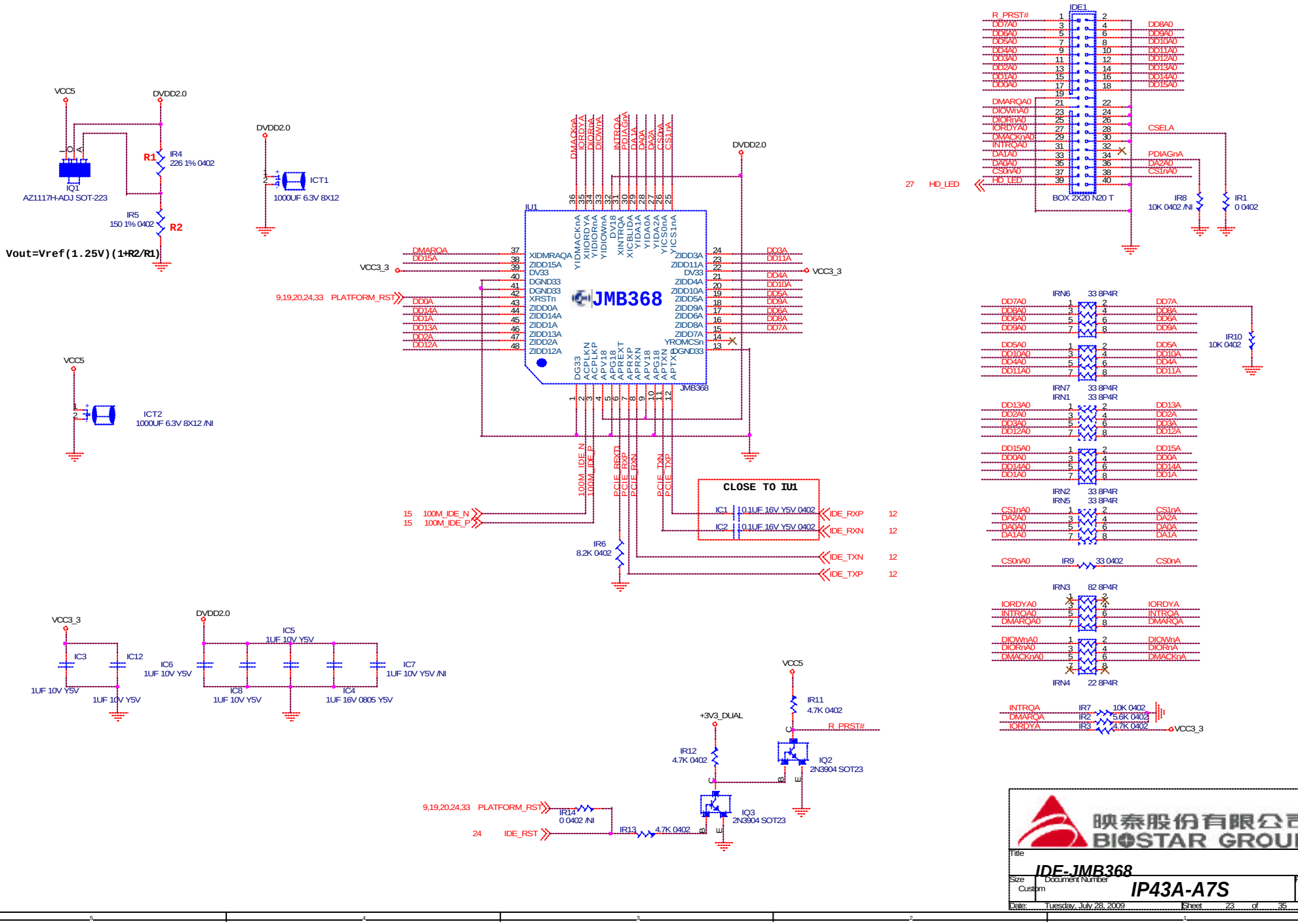
VCC5
DVDD2.0
IQ1
AZ1117H-ADJ SOT-223
R1
IR4
226 1% 0402
IR5
150 1% 0402
R2
Vout=Vref(1.25V)(1+R2/R1)
ICT1
1000UF 6.3V 8X12
ICT2
1000UF 6.3V 8X12 /NI
IU1
JMB368
CLOSE TO IU1
IC1
0.1UF 16V Y5V 0402
IC2
0.1UF 16V Y5V 0402
IR6
8.2K 0402
IDE1
BOX 2X20 N20 T
IR8
10K 0402 /NI
IR1
0 0402
IR10
10K 0402
IRN6
IRN7
IRN1
IRN2
IRN5
IRN3
IRN4
IR9
33 0402
IR7
10K 0402
IR2
5.6K 0402
IR3
4.7K 0402
IR11
4.7K 0402
IR12
4.7K 0402
IQ2
2N3904 SOT23
IQ3
2N3904 SOT23
IR14
0 0402 /NI
IR13
4.7K 0402
IC3
IC12
IC6
IC5
IC8
IC4
IC7
1UF 10V Y5V
1UF 16V 0805 Y5V
1UF 10V Y5V /NI
+3V3_DUAL
VCC3_3
R_PRST#
PLATFORM_RST
IDE_RST
IDE_RXP
IDE_RXN
IDE_TXN
IDE_TXP
HD_LED
100M_IDE_N
100M_IDE_P
CSELA
PDIAGnA
映泰股份有限公司
BIOSTAR GROUP
Title
IDE-JMB368
Size
Custom
Document Number
IP43A-A7S
Rev
6.0
Date:
Tuesday, July 28, 2009
Sheet
23
of
35

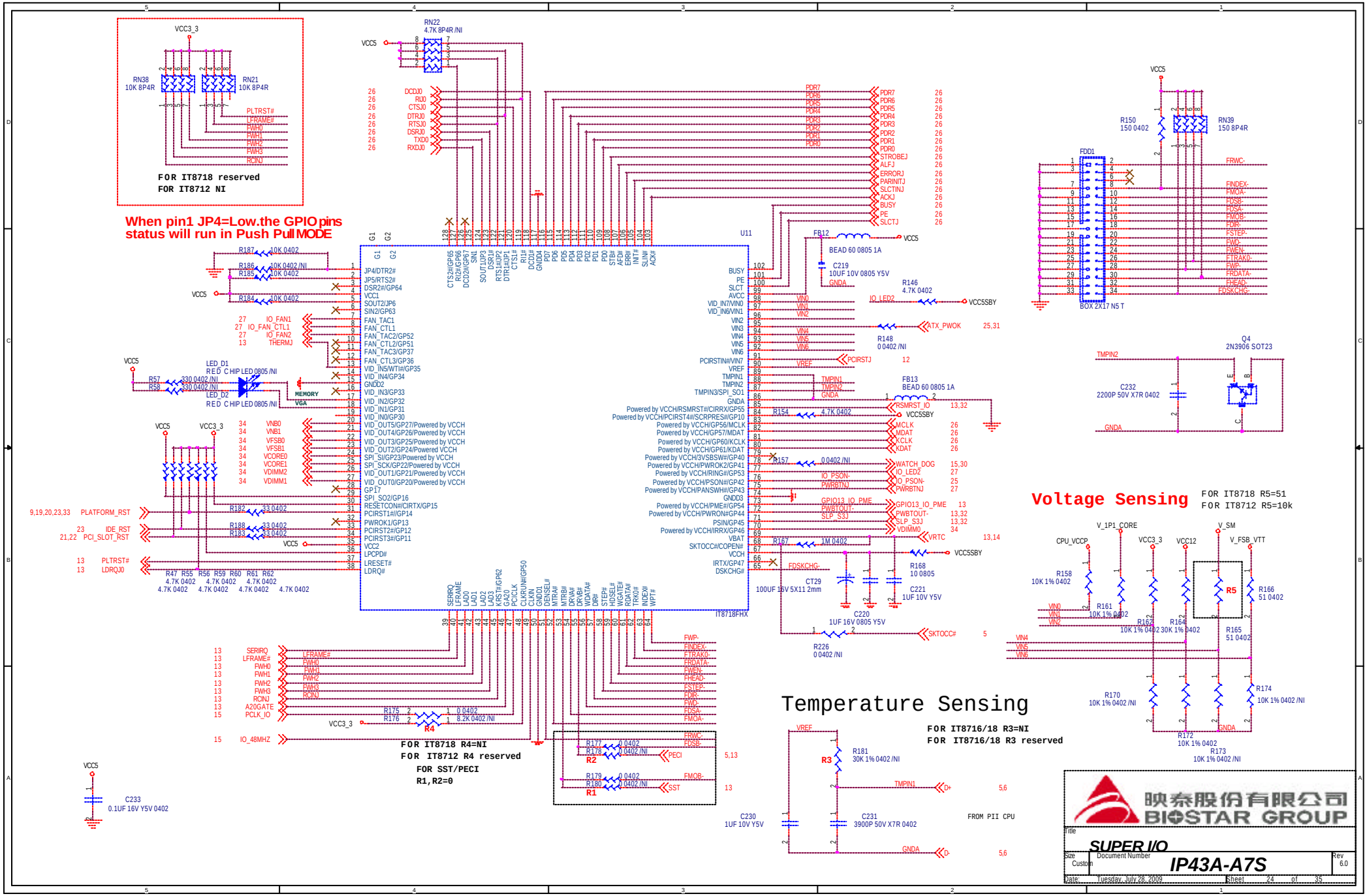
FOR IT8718 reserved
FOR IT8712 NI
When pin1 JP4=Low.the GPIO pins status will run in Push Pull MODE
IT8718FHX
FOR IT8718 R4=NI
FOR IT8712 R4 reserved
FOR SST/PECI
R1,R2=0
Temperature Sensing
FOR IT8716/18 R3=NI
FOR IT8716/18 R3 reserved
Voltage Sensing
FOR IT8718 R5=51
FOR IT8712 R5=10k
FROM PII CPU
SUPER I/O
IP43A-A7S
BIOSTAR GROUP
Tuesday, July 28, 2009

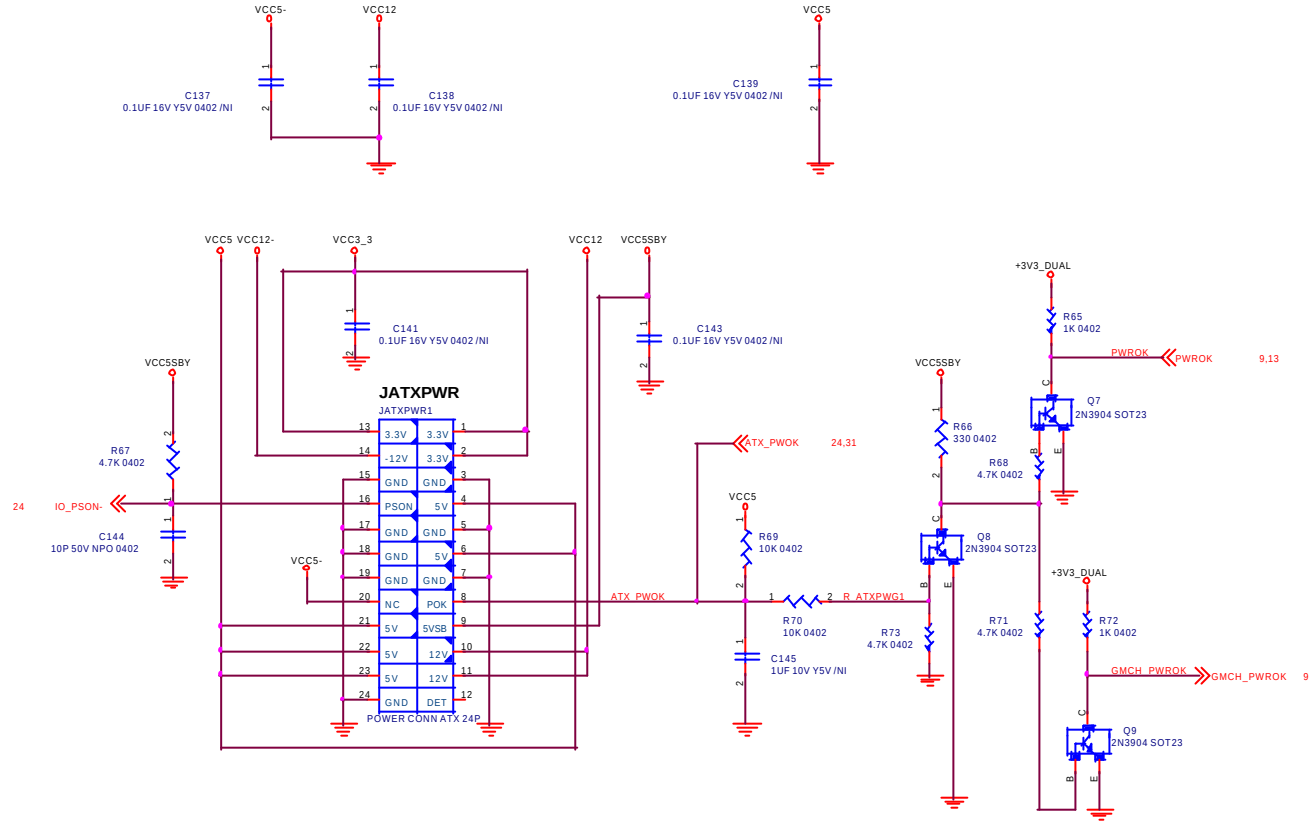

映泰股份有限公司
BIOSTAR GROUP

Title: ATX POWER

Size	Document Number	Rev
Custom	IP43A-A7S	6.0

Date: Tuesday, July 28, 2009 Sheet 25 of 35

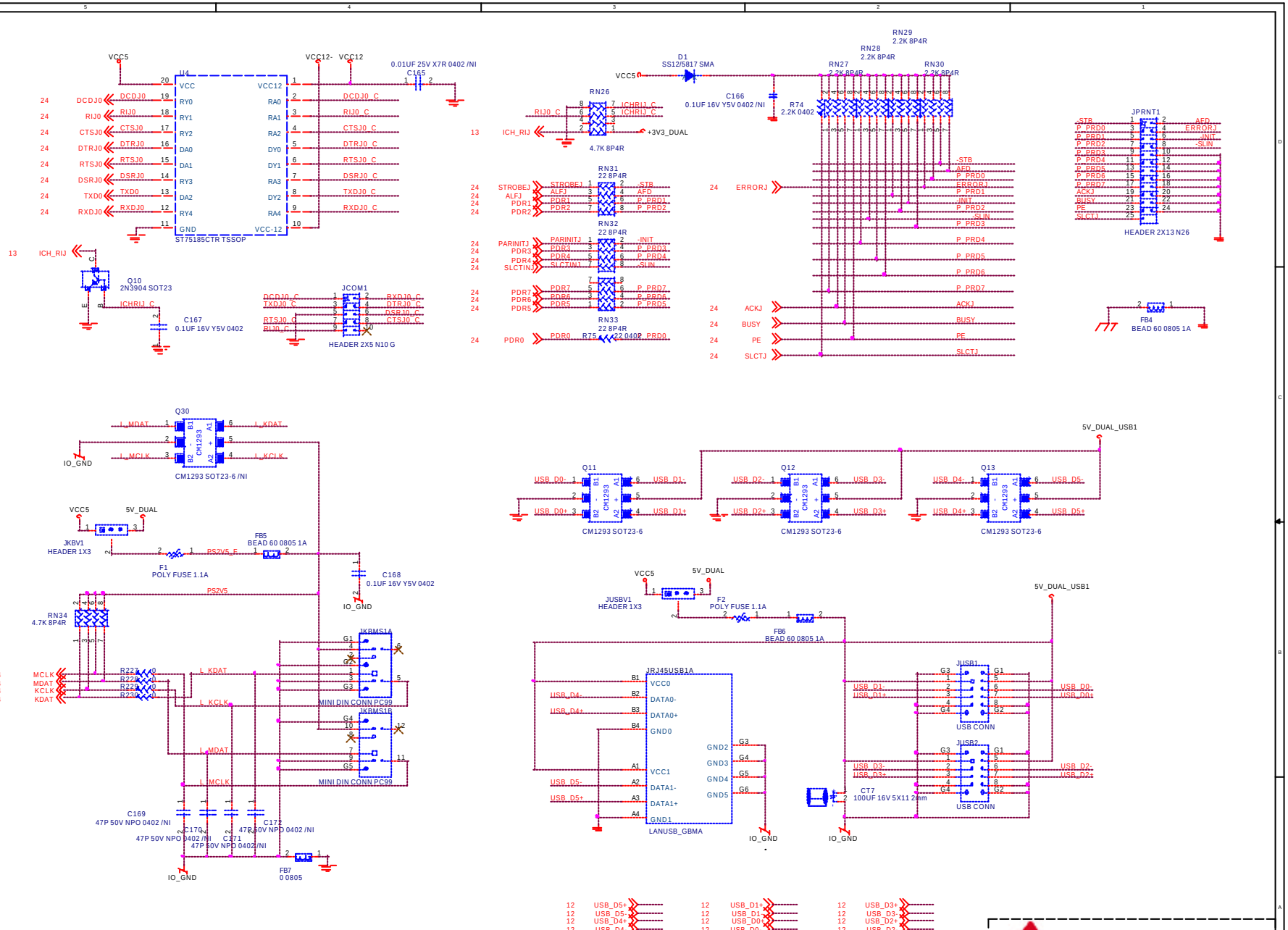

映泰股份有限公司
BIOSTAR GROUP

Title: **COM, LPT, PS2, USB**

Size	Document Number	Rev
Custom	IP43A-A7S	6.0

Date: Tuesday, July 28, 2009 Sheet 26 of 35

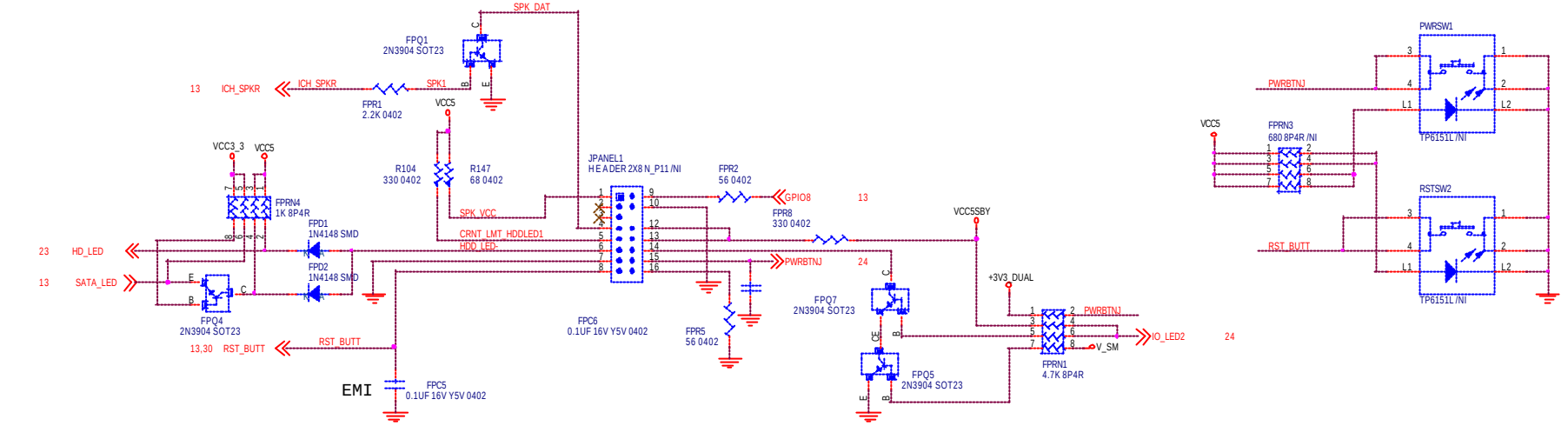

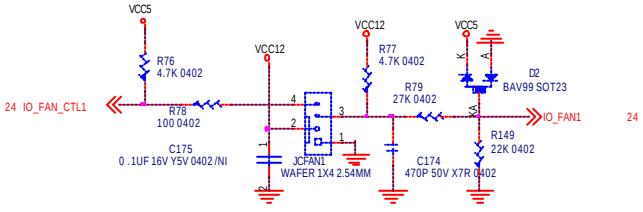

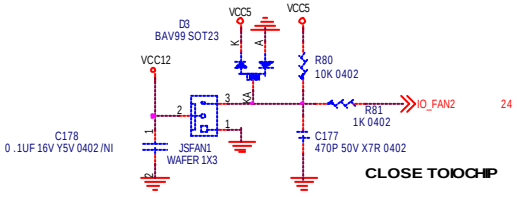

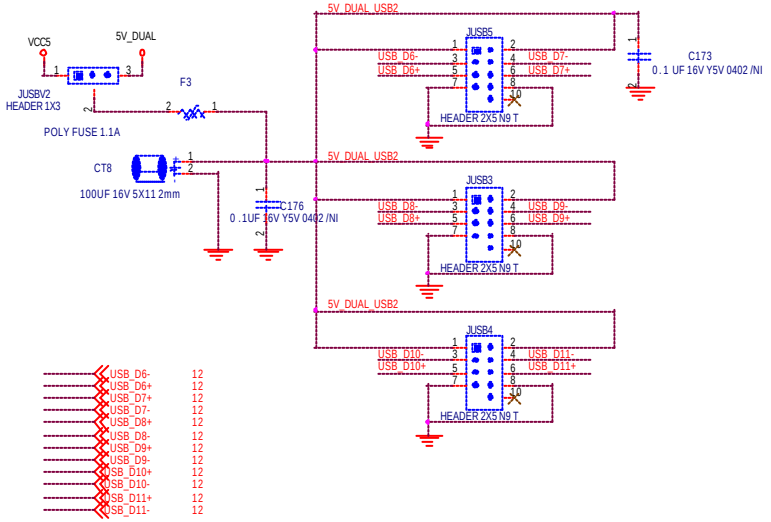

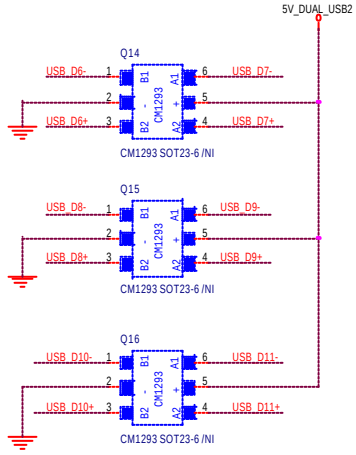

映泰股份有限公司
BIOSTAR GROUP

Title: FRONT PAN, USB, FANS

Size: Custom | Document Number: IP43A-A7S | Rev: 6.0

Date: Tuesday, July 28, 2009 | Sheet 27 of 35

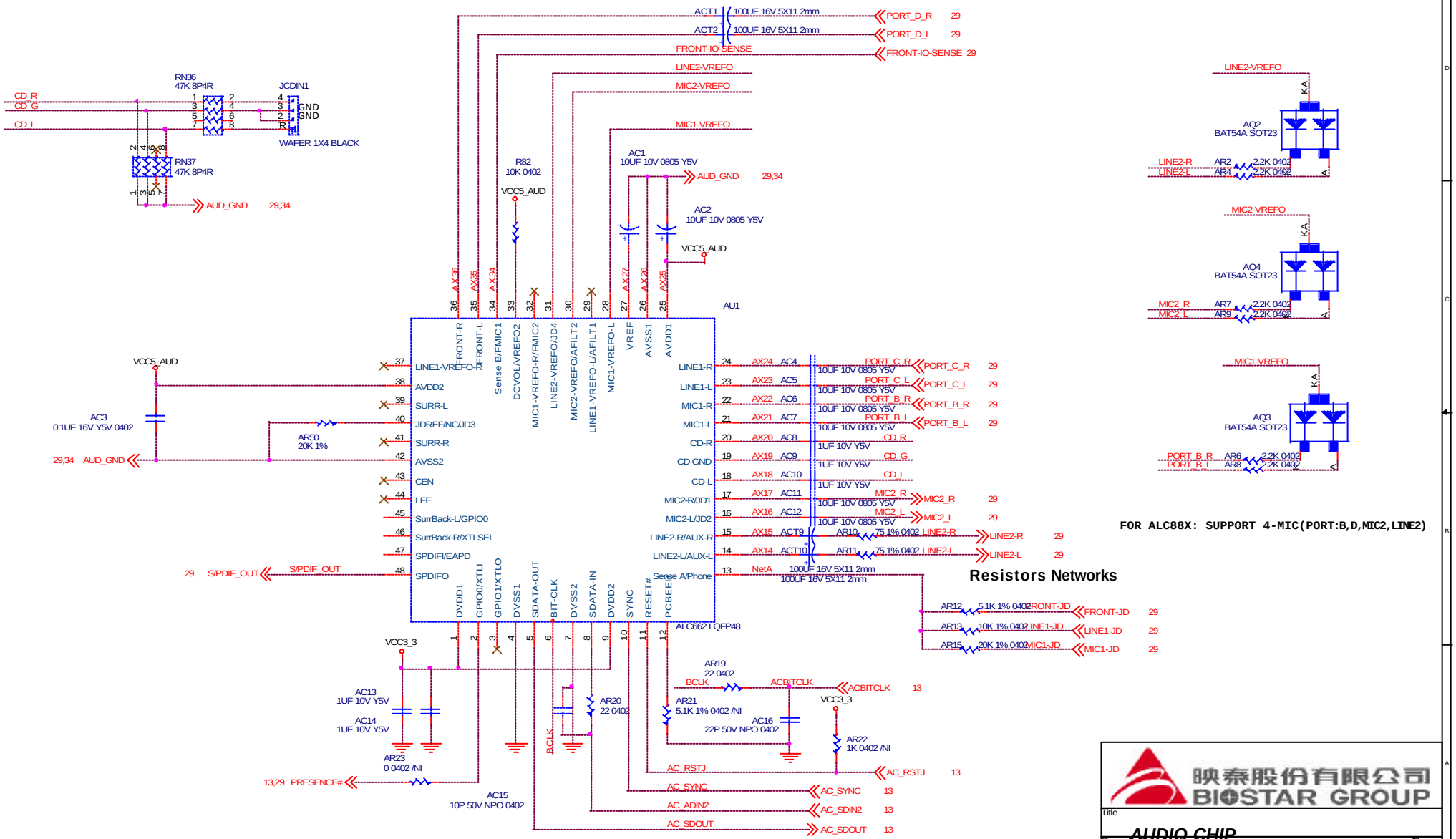
ACT1 100UF 16V 5X11 2mm
ACT2 100UF 16V 5X11 2mm
FRONT-IO-SENSE
LINE2-VREFO
MIC2-VREFO
MIC1-VREFO
RN36 47K 8P4R
RN37 47K 8P4R
JCDIN1
WAFER 1X4 BLACK
CD_R
CD_G
CD_L
GND
AUD_GND 29,34
R82 10K 0402
VCC5_AUD
AC1 10UF 10V 0805 Y5V
AC2 10UF 10V 0805 Y5V
AU1
FRONT-R
FRONT-L
Sense B/FMIC1
DCVOL/VREFO2
MIC1-VREFO-R/FMIC2
LINE2-VREFO/JD4
MIC2-VREFO/AFILT2
LINE1-VREFO-L/AFILT1
MIC1-VREFO-L
VREF
AVSS1
AVDD1
LINE1-VREFO-R
AVDD2
SURR-L
JDREF/NC/JD3
SURR-R
AVSS2
CEN
LFE
SurrBack-L/GPIO0
SurrBack-R/XTLSEL
SPDIFI/EAPD
SPDIFO
S/PDIF_OUT
DVDD1
GPIO0/XTLI
GPIO1/XTLO
DVSS1
SDATA-OUT
BIT-CLK
DVSS2
SDATA-IN
DVDD2
SYNC
RESET#
PCBEEP
ALC662 LQFP48
LINE1-R
LINE1-L
MIC1-R
MIC1-L
CD-R
CD-GND
CD-L
MIC2-R/JD1
MIC2-L/JD2
LINE2-R/AUX-R
LINE2-L/AUX-L
Sense A/Phone
NetA
PORT_C_R
PORT_C_L
PORT_B_R
PORT_B_L
CD_R
CD_G
CD_L
MIC2_R
MIC2_L
LINE2-R
LINE2-L
AC3 0.1UF 16V Y5V 0402
AR50 20K 1%
VCC3_3
AC13 1UF 10V Y5V
AC14 1UF 10V Y5V
AR23 0 0402 /NI
AC15 10P 50V NPO 0402
AR20 22 0402
AR19 22 0402
AR21 5.1K 1% 0402 /NI
AC16 22P 50V NPO 0402
AR22 1K 0402 /NI
BCLK
ACBITCLK
AC_RSTJ
AC_SYNC
AC_ADIN2
AC_SDOUT
13,29 PRESENCE#
AQ2 BAT54A SOT23
AQ4 BAT54A SOT23
AQ3 BAT54A SOT23
AR2 2.2K 0402
AR4 2.2K 0402
AR7 2.2K 0402
AR9 2.2K 0402
AR6 2.2K 0402
AR8 2.2K 0402
FOR ALC88X: SUPPORT 4-MIC(PORT:B,D,MIC2,LINE2)
Resistors Networks
AR12 5.1K 1% 0402 FRONT-JD
AR13 10K 1% 0402 LINE1-JD
AR15 20K 1% 0402 MIC1-JD
映泰股份有限公司
BIOSTAR GROUP
Title
AUDIO CHIP
Size Custom
Document Number
IP43A-A7S
Rev 6.0
Date: Tuesday, July 28, 2009
Sheet 28 of 35

Rear Panel Onboard Analog I/O

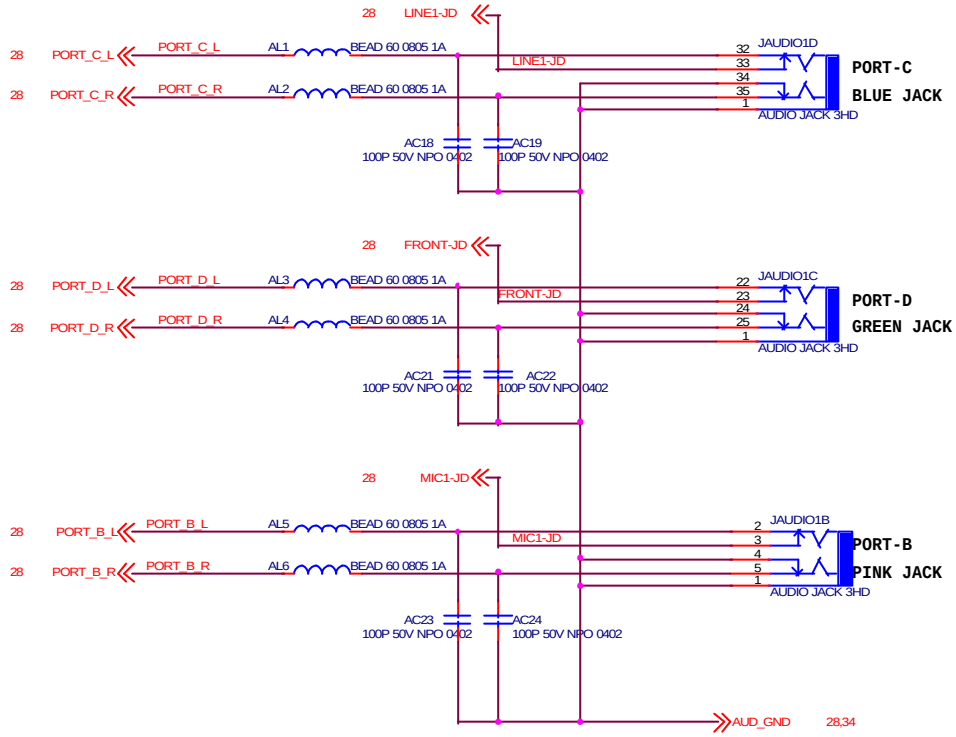

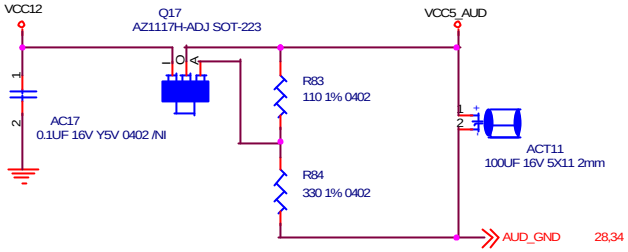

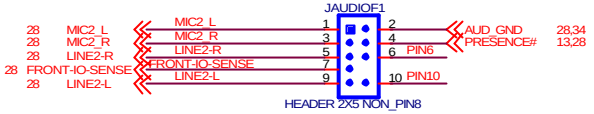



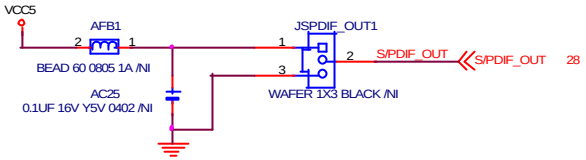

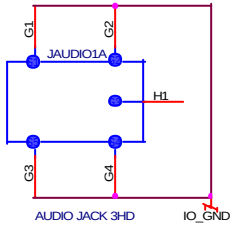

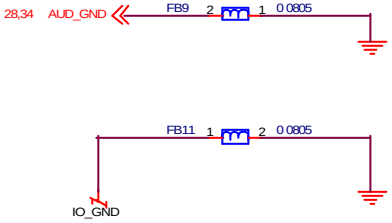

映泰股份有限公司
BIOSTAR GROUP

Title	AUDIO CONNECTORS	
Size: Custom	Document Number: IP43A-A7S	Rev: 6.0
Date: Tuesday, July 28, 2009	Sheet 29 of 35	

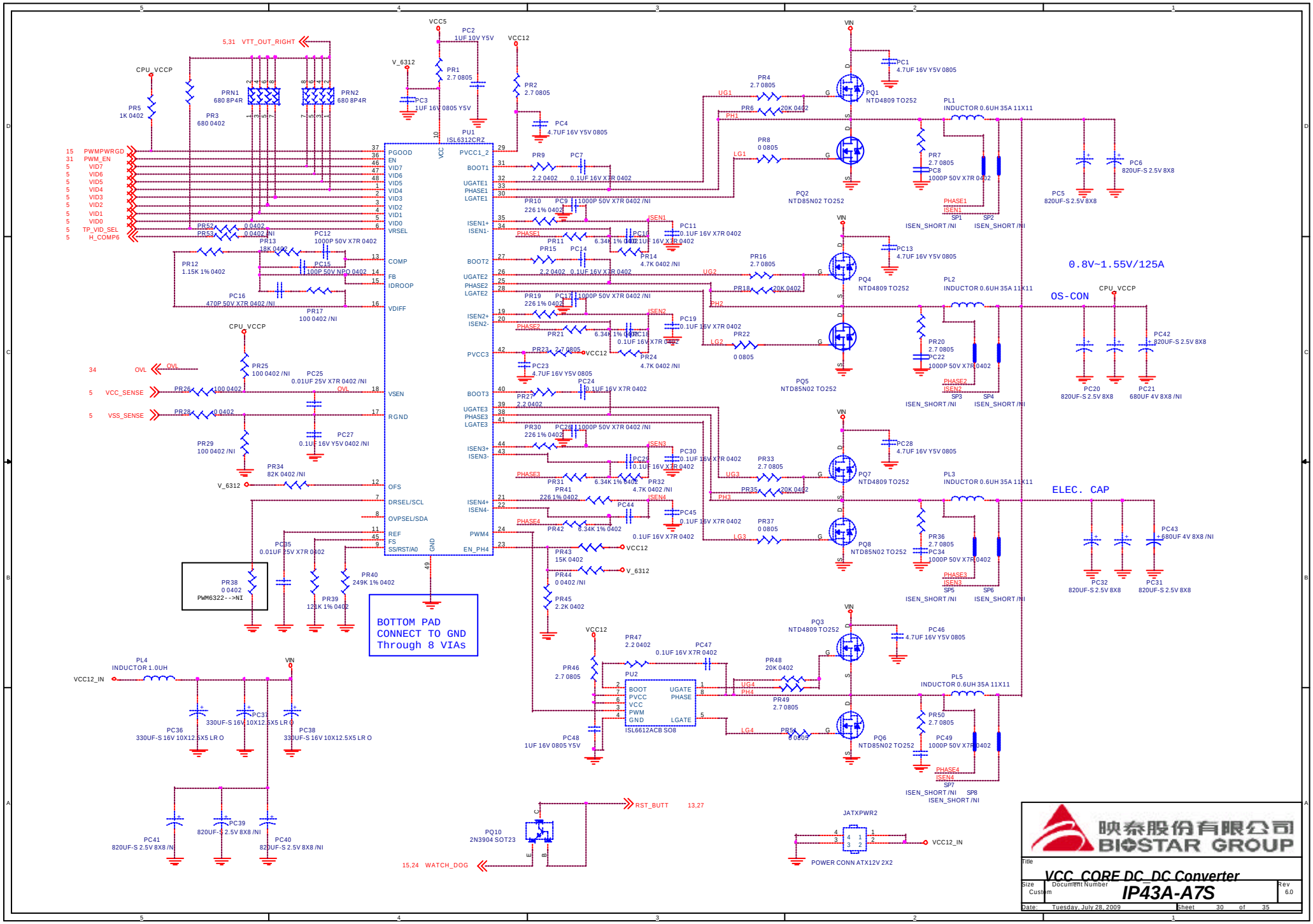
5,31 VTT_OUT_RIGHT
CPU_VCCP
PRN1 680 8P4R
PRN2 680 8P4R
PR5 1K 0402
PR3 680 0402
VCC5
PC2 1UF 10V Y5V
VCC12
V_6312
PR1 2.7 0805
PC3 1UF 16V 0805 Y5V
PR2 2.7 0805
PC4 4.7UF 16V Y5V 0805
PU1 ISL6312CRZ
PWMPWRGD
PWM_EN
VID7
VID6
VID5
VID4
VID3
VID2
VID1
VID0
TP_VID_SEL
H_COMP6
PGOOD
EN
VID7
VID6
VID5
VID4
VID3
VID2
VID1
VID0
VRSEL
PR52 0.0402
PR53 0.0402 /NI
PC12 1000P 50V X7R 0402
PR13 18K 0402
PR12 1.15K 1% 0402
PC15 100P 50V NPO 0402
PC16 470P 50V X7R 0402 /NI
PR17 100 0402 /NI
COMP
FB
IDROOP
VDIFF
CPU_VCCP
PR25 100 0402 /NI
PC25 0.01UF 25V X7R 0402 /NI
OVL
VCC_SENSE
VSS_SENSE
PR26 100 0402
PR28 0 0402
PC27 0.1UF 16V Y5V 0402 /NI
PR29 100 0402 /NI
PR34 82K 0402 /NI
VSEN
RGND
OFS
DRSEL/SCL
OVPSEL/SDA
REF
FS
SS/RST/A0
GND
PC35 0.01UF 25V X7R 0402
PR40 249K 1% 0402
PR39 12K 1% 0402
PR38 0 0402
PWM6322-->NI
BOTTOM PAD
CONNECT TO GND
Through 8 VIAs
PWGD
VCC
PVCC1_2
BOOT1
UGATE1
PHASE1
LGATE1
ISEN1+
ISEN1-
BOOT2
UGATE2
PHASE2
LGATE2
ISEN2+
ISEN2-
PVCC3
BOOT3
UGATE3
PHASE3
LGATE3
ISEN3+
ISEN3-
ISEN4+
ISEN4-
PWM4
EN_PH4
PR9 2.2 0402
PC7 0.1UF 16V X7R 0402
PR10 226 1% 0402
PC9 1000P 50V X7R 0402 /NI
PR11 6.34K 1% 0402
PC10 0.1UF 16V X7R 0402
PC11 0.1UF 16V X7R 0402
PR14 4.7K 0402 /NI
PR15 2.2 0402
PC14 0.1UF 16V X7R 0402
PR19 226 1% 0402
PC17 1000P 50V X7R 0402 /NI
PR21 6.34K 1% 0402
PC18 0.1UF 16V X7R 0402
PC19 0.1UF 16V X7R 0402
PR24 4.7K 0402 /NI
PR23 2.7 0805
PC23 4.7UF 16V Y5V 0805
PR27 2.2 0402
PC24 0.1UF 16V X7R 0402
PR30 226 1% 0402
PC26 1000P 50V X7R 0402 /NI
PR31 6.34K 1% 0402
PC29 0.1UF 16V X7R 0402
PC30 0.1UF 16V X7R 0402
PR32 4.7K 0402 /NI
PR41 226 1% 0402
PC44 0.1UF 16V X7R 0402
PC45 0.1UF 16V X7R 0402
PR42 6.34K 1% 0402
PR43 15K 0402
PR44 0 0402 /NI
PR45 2.2K 0402
VIN
PC1 4.7UF 16V Y5V 0805
PR4 2.7 0805
PR6 20K 0402
PQ1 NTD4809 TO252
PR8 0 0805
PQ2 NTD85N02 TO252
PL1 INDUCTOR 0.6UH 35A 11X11
PR7 2.7 0805
PC8 1000P 50V X7R 0402
PC5 820UF-S 2.5V 8X8
PC6 820UF-S 2.5V 8X8
PHASE1
ISEN1
SP1
SP2
ISEN_SHORT /NI
PC13 4.7UF 16V Y5V 0805
PR16 2.7 0805
PR18 20K 0402
PQ4 NTD4809 TO252
PQ5 NTD85N02 TO252
PL2 INDUCTOR 0.6UH 35A 11X11
PR20 2.7 0805
PC22 1000P 50V X7R 0402
PC20 820UF-S 2.5V 8X8
PC21 680UF 4V 8X8 /NI
PC42 820UF-S 2.5V 8X8
PHASE2
ISEN2
SP3
SP4
0.8V~1.55V/125A
OS-CON
CPU_VCCP
PC28 4.7UF 16V Y5V 0805
PR33 2.7 0805
PR35 20K 0402
PQ7 NTD4809 TO252
PQ8 NTD85N02 TO252
PL3 INDUCTOR 0.6UH 35A 11X11
PR36 2.7 0805
PC34 1000P 50V X7R 0402
PC32 820UF-S 2.5V 8X8
PC31 820UF-S 2.5V 8X8
PC43 680UF 4V 8X8 /NI
PHASE3
ISEN3
SP5
SP6
ELEC. CAP
PQ3 NTD4809 TO252
PC46 4.7UF 16V Y5V 0805
PR48 20K 0402
PR49 2.7 0805
PR54 0 0805
PQ6 NTD85N02 TO252
PL5 INDUCTOR 0.6UH 35A 11X11
PR50 2.7 0805
PC49 1000P 50V X7R 0402
PHASE4
ISEN4
SP7
SP8
PR47 2.2 0402
PC47 0.1UF 16V X7R 0402
PR46 2.7 0805
PU2
BOOT
PVCC
VCC
PWM
GND
UGATE
PHASE
LGATE
ISL6612ACB SO8
PC48 1UF 16V 0805 Y5V
PL4 INDUCTOR 1.0UH
VCC12_IN
PC36 330UF-S 16V 10X12.5X5 LR O
PC37 330UF-S 16V 10X12.5X5 LR O
PC38 330UF-S 16V 10X12.5X5 LR O
PC41 820UF-S 2.5V 8X8 /NI
PC39 820UF-S 2.5V 8X8 /NI
PC40 820UF-S 2.5V 8X8 /NI
PQ10 2N3904 SOT23
RST_BUTT
13,27
15,24 WATCH_DOG
JATXPWR2
POWER CONN ATX12V 2X2
VCC12_IN
映泰股份有限公司
BIOSTAR GROUP
Title
VCC_CORE DC_DC Converter
Size Custom
Document Number IP43A-A7S
Rev 6.0
Date: Tuesday, July 28, 2009
Sheet 30 of 35

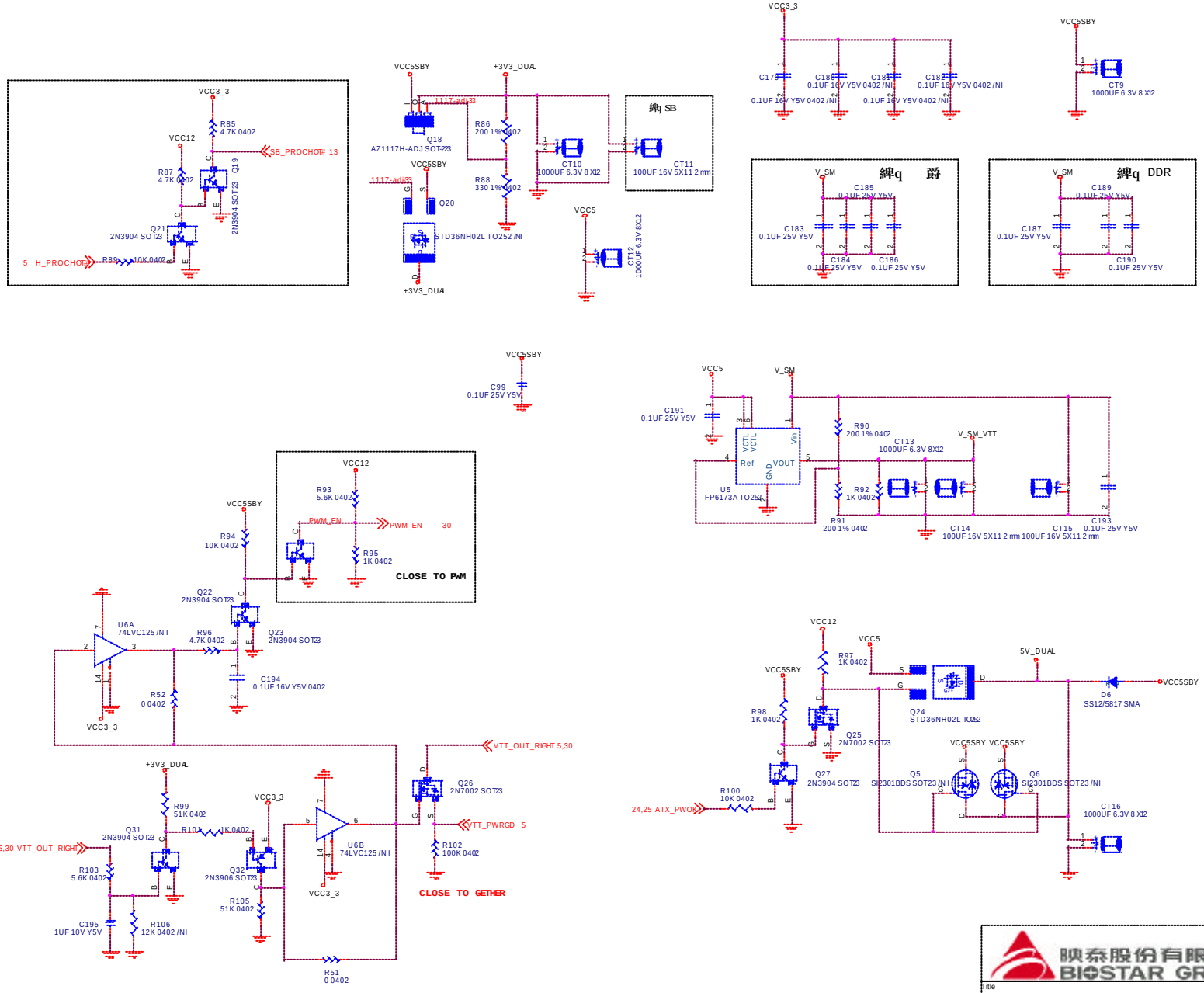

映泰股份有限公司
BIOSTAR GROUP

Title: Miscellaneous DC-DC Con-1

Size: Custom | Document Number: IP43A-A7S | Rev: 6.0

Date: Tuesday, July 28, 2009 | Sheet 31 of 35

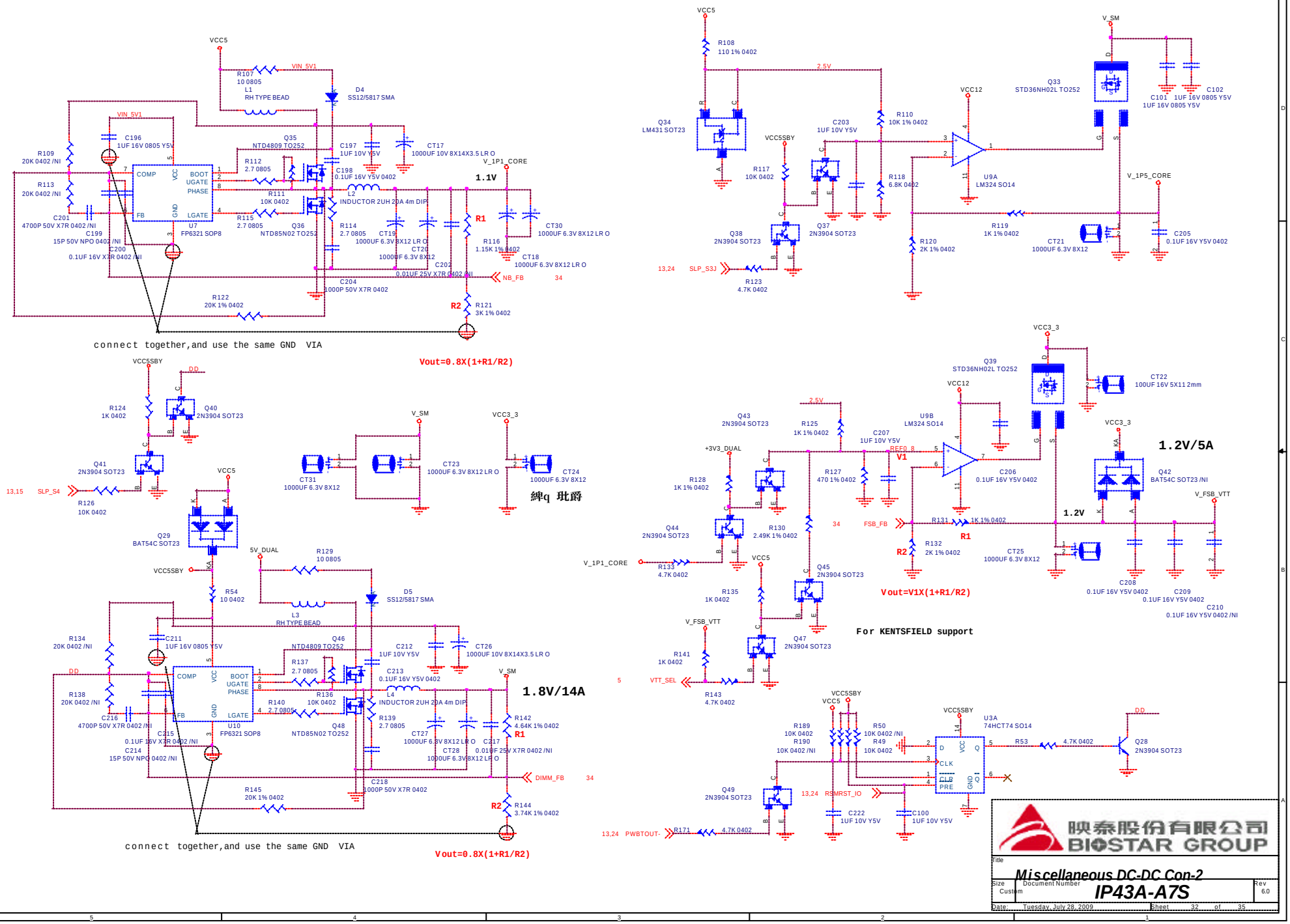
VCC5
VIN_5V1
R107 10 0805
L1 RH TYPE BEAD
D4 SS12/5817 SMA
C196 1UF 16V 0805 Y5V
R109 20K 0402 /NI
R113 20K 0402 /NI
C201 4700P 50V X7R 0402 /NI
C199 15P 50V NPO 0402 /NI
C200 0.1UF 16V X7R 0402 /NI
U7 FP6321 SOP8
COMP
FB
VCC
GND
BOOT
UGATE
PHASE
LGATE
Q35 NTD4809 TO252
R112 2.7 0805
C197 1UF 10V Y5V
C198 0.1UF 16V Y5V 0402
CT17 1000UF 10V 8X14X3.5 LR O
V_1P1_CORE
1.1V
L2 INDUCTOR 2UH 20A 4m DIP
R111 10K 0402
R115 2.7 0805
Q36 NTD85N02 TO252
R114 2.7 0805
CT19 1000UF 6.3V 8X12 LR O
CT20 1000UF 6.3V 8X12
R1
R116 1.15K 1% 0402
CT30 1000UF 6.3V 8X12 LR O
CT18 1000UF 6.3V 8X12 LR O
C202 0.01UF 25V X7R 0402 /NI
C204 1000P 50V X7R 0402
NB_FB
34
R122 20K 1% 0402
R2
R121 3K 1% 0402
connect together,and use the same GND VIA
Vout=0.8X(1+R1/R2)
VCC5SBY
DD
R124 1K 0402
Q40 2N3904 SOT23
Q41 2N3904 SOT23
13,15 SLP_S4
R126 10K 0402
Q29 BAT54C SOT23
V_SM
VCC3_3
CT31 1000UF 6.3V 8X12
CT23 1000UF 6.3V 8X12 LR O
CT24 1000UF 6.3V 8X12
紳q 玭爵
5V_DUAL
R129 10 0805
D5 SS12/5817 SMA
R54 10 0402
L3 RH TYPE BEAD
R134 20K 0402 /NI
C211 1UF 16V 0805 Y5V
Q46 NTD4809 TO252
C212 1UF 10V Y5V
CT26 1000UF 10V 8X14X3.5 LR O
R137 2.7 0805
C213 0.1UF 16V Y5V 0402
R138 20K 0402 /NI
C216 4700P 50V X7R 0402 /NI
C215 0.1UF 16V X7R 0402 /NI
C214 15P 50V NPO 0402 /NI
U10 FP6321 SOP8
R140 2.7 0805
R136 10K 0402
Q48 NTD85N02 TO252
L4 INDUCTOR 2UH 20A 4m DIP
R139 2.7 0805
CT27 1000UF 6.3V 8X12 LR O
CT28 1000UF 6.3V 8X12 LR O
C217 0.010F 25V X7R 0402 /NI
R1
R142 4.64K 1% 0402
1.8V/14A
DIMM_FB
34
C218 1000P 50V X7R 0402
R145 20K 1% 0402
R2
R144 3.74K 1% 0402
connect together,and use the same GND VIA
Vout=0.8X(1+R1/R2)
R108 110 1% 0402
2.5V
Q34 LM431 SOT23
VCC12
Q33 STD36NH02L TO252
C101 1UF 16V 0805 Y5V
C102 1UF 16V 0805 Y5V
C203 1UF 10V Y5V
R110 10K 1% 0402
VCC5SBY
R117 10K 0402
R118 6.8K 0402
U9A LM324 SO14
V_1P5_CORE
Q38 2N3904 SOT23
Q37 2N3904 SOT23
R119 1K 1% 0402
13,24 SLP_S3J
R123 4.7K 0402
R120 2K 1% 0402
CT21 1000UF 6.3V 8X12
C205 0.1UF 16V Y5V 0402
VCC3_3
Q39 STD36NH02L TO252
CT22 100UF 16V 5X11 2mm
Q43 2N3904 SOT23
R125 1K 1% 0402
U9B LM324 SO14
C207 1UF 10V Y5V
+3V3_DUAL
REF0_8
V1
R128 1K 1% 0402
R127 470 1% 0402
C206 0.1UF 16V Y5V 0402
1.2V/5A
Q42 BAT54C SOT23 /NI
V_FSB_VTT
Q44 2N3904 SOT23
R130 2.49K 1% 0402
34
FSB_FB
R131 1K 1% 0402
1.2V
R1
R2
R132 2K 1% 0402
CT25 1000UF 6.3V 8X12
V_1P1_CORE
R133 4.7K 0402
Q45 2N3904 SOT23
C208 0.1UF 16V Y5V 0402
C209 0.1UF 16V Y5V 0402
C210 0.1UF 16V Y5V 0402 /NI
R135 1K 0402
Vout=V1X(1+R1/R2)
V_FSB_VTT
Q47 2N3904 SOT23
For KENTSFIELD support
R141 1K 0402
5
VTT_SEL
R143 4.7K 0402
VCC5SBY
VCC5
R189 10K 0402
R190 10K 0402 /NI
R50 10K 0402 /NI
R49 10K 0402
U3A 74HCT74 SO14
D
CLK
CLR
PRE
Q
GND
VCC
R53 4.7K 0402
Q28 2N3904 SOT23
Q49 2N3904 SOT23
13,24 RSMRST_IO
C222 1UF 10V Y5V
C100 1UF 10V Y5V
13,24 PWBTOUT
R171 4.7K 0402
映泰股份有限公司
BIOSTAR GROUP
Title
Miscellaneous DC-DC Con-2
Size Custom
Document Number
IP43A-A7S
Rev 6.0
Date: Tuesday, July 28, 2009
Sheet 32 of 35

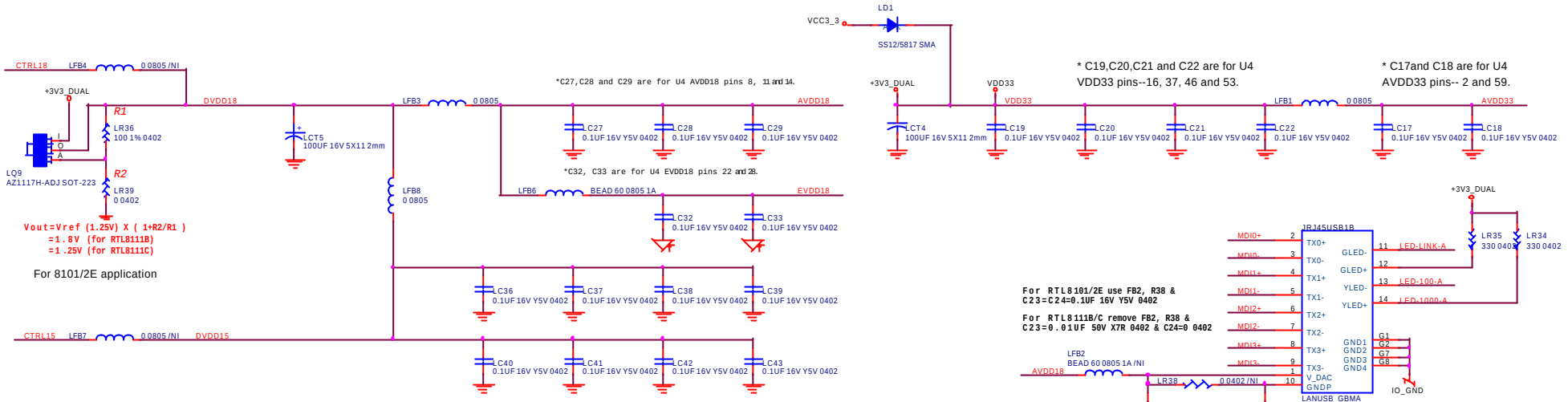

Remove FB4,,FB7 for RTL8111C

Remove FB8,R36,R39,Q9 for RTL8101/2E

Power domain chart	RTL8111C/ RTL8102E
AVDD33	3.3V
AVDD18	1.2V
EVDD18	1.2V
DVDD15	1.2V

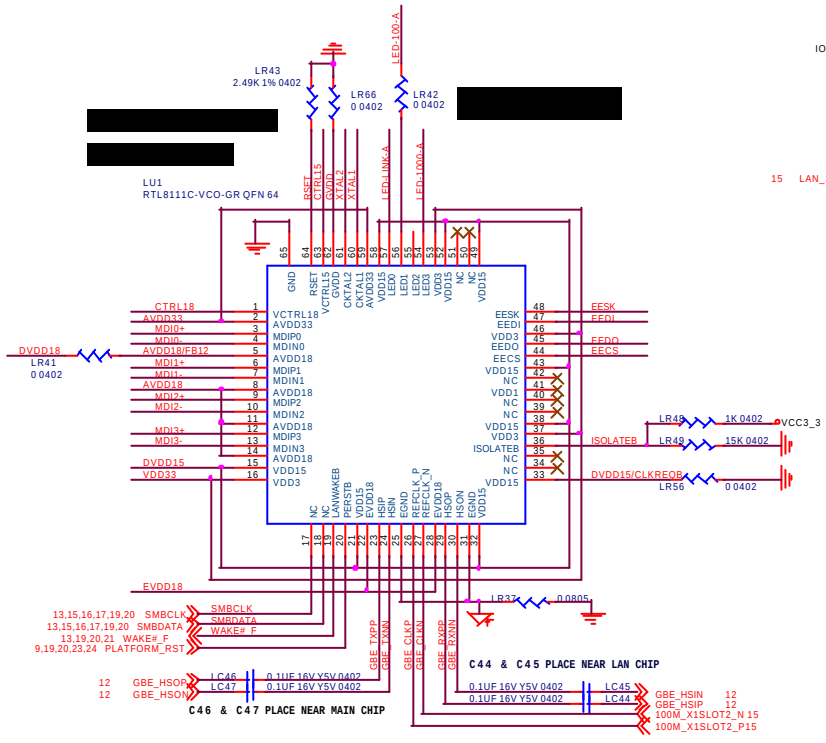

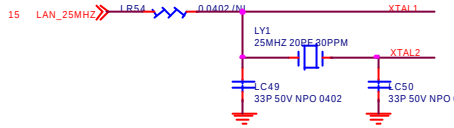

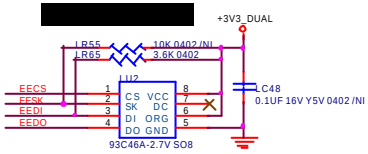

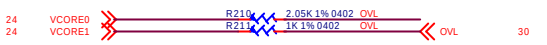

VCORE0	VCORE1	VOLTAGE
0	0	+0.7V
1	0	+0.6V
0	1	+0.5V
1	1	+0.4V



VCORE0	VCORE1	VOLTAGE
0	0	1.2V
1	0	1.3V
0	1	1.4V
1	1	1.5V



VDIMM0	VDIMM1	VDIMM2	VOLTAGE
0	0	0	+0.1V (1.925V)
1	0	0	+0.2V
0	1	0	+0.3V
1	1	0	+0.4V
0	0	1	+0.5V
1	0	1	+0.6V
0	1	1	+0.7V
1	1	1	+0.8V



VDIMM0	VDIMM1	VOLTAGE
0	0	1.1V
1	0	1.2V
0	1	1.3V
1	1	1.4V

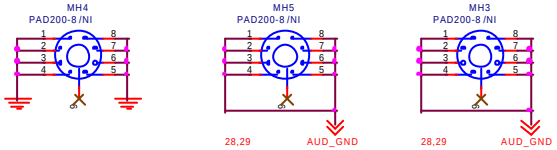

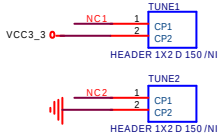

映泰股份有限公司
BIOSTAR GROUP

Title: GPIO OV

Size	Document Number	Rev
Custom	IP43A-A7S	6.0

Date: Tuesday, July 28, 2009 Sheet 34 of 35

JKBV1(1_2)
JUMPER 2P R

JCMOS1(1_2)
JUMPER 2P B

JUSBV1(1_2)
JUMPER 2P R

(SY1)
X'TAL WIRE

JUSBV2(1_2)
JUMPER 2P R

32.768垂綺铬紡

PCB

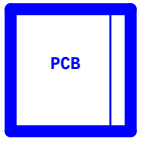

IP43A-A7S V6.0

(U1)



SPI MX25L8005 DIP

(PCB)



POLON 305x220

(NB1)

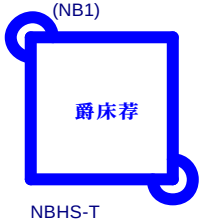

NBHS-T

(BAT1)

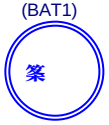

3V BATTERY SONY

(SB1)

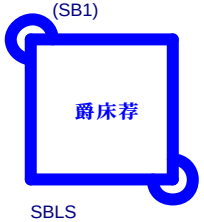

SBLS

New JPANEL1

JPANEL1 2*8

JPANEL1(9_10)
HEADER 1X2

JPANEL1(15_16)
HEADER 1X2

JPANEL1(11_14)
PLED

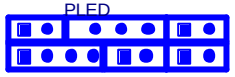

JPANEL1(1_4)
SPK

JPANEL1(5_6)
HLED

JPANEL1(7_8)
RST

映泰股份有限公司
BIOSTAR GROUP

Title

BOM

Size	Document Number	Rev
A	***IP43A-A7S***	6.0

Date: Tuesday, July 28, 2009 Sheet 35 of 35