IZ87D-AHT REV 5.3

PAGE	CONTENTS
1	INDEX
2	BLOCK DIAGRAM
3	POWER DELIVERY
4	CHANGE LIST
5	CPU PCIEX16/DMI
6	CPU FDI
7	CPU DDR CHANNEL A
8	CPU DDR CHANNEL B
9	CPU POWER/GND
10	DDR3 DIMMA1/A2
11	DDR3 DIMMB1/B2
12	PCH DMI/PCIE/USB
13	PCH CLINK/SATA/CPU HOST
14	PCH LPC/HDA/SPI/MISC
15	PCH NVRAM
16	PCH USB3/FDI LINK
17	PCH VGA/DISPLAY PORT
18	PCH CLOCK BUFFER
19	PCH POWER
20	PCH GND
21	SPI ROM/BAT
22	PCIEX16 SLOT1
23	PCIEX16 SLOT2(x4)
24	PCIEX1 SLOT1&2
25	HDMI CONNECTOR
26	VGA/DVI CONNECTOR
27	AUDIO CODEC ALC892
28	AUDIO CONNECTOR
29	LAN RTL8111F/8105E
30	PCI BRIDGE IT8893
31	PCI SOLT1&2
32	SUPERIO ITE8728BX
33	SUPERIO PS2/COM
34	F75308 LQFP48
35	FAN CONTROL
36	FRONT USB
37	USB CONNECTOR
38	24PIN POWER CONN&FP
39	RESUME RESET LOGIC
40	ACPI POWER CONTROL
41	LINEAR POWER
42	MEMORY DC-DC Conver
43	ISL6367 PWM controller
44	VCORE & VAXG
45	RESERVED FOR AMT POWER
46	OVER VOLTAGE
47	BOM

CPU:

Intel Ivy HASWELL processors in LGA1150Package 95W

System Chipset:

Z87

Main Memory:

Dual Channel/DDR-III*4(Max 16GB) 1066/1333/1600

Onboard Device:

Super I/O:IT8728

LAN:Realtek 8111E

HD Codec:ALC898 6 jacks

Power solution:

CPU Voltage Regulators:12phase by ISL6367H high 1 Low 1 OV BY ISL6367

DDR Voltage Regulators:1Phase by FP6326 high 1 Low 2 OV BY UP1811

Expansion Slots:

PCI EXPRESS 16X SLOT*2 PCI EXPRESS 4X SLOT*1

PCI EXPRESS 1X SLOT*3

REAR IO:

PS/2 +2 layer USB2.0 Port

HDMI Port

DVI+VGA Port

USB3.0 PORT*2

Gb RJ-45 +2 layer USB3.0 Ports

Audio Jackets

Front I/O:

4SATA2(Red)+ 2SATA3(white)

USB 2.0 Header * 4

USB 3.0 Header * 2

CPU /System1/System2 FAN

Serial header

CIR Header

Front Audio Header & SPDIF Out 1

◇BIOSTAR'S PROPRIETARY INFORMATION◆

◇Any unauthorized use, reproduction, duplication, or disclosure of this document will be subject to the applicable civil and/or criminal penalties.◆

映泰股份有限公司 BIOSTAR GROUP

Title: INDEX

Size: Custom | Document Number: IZ87D-AHT | Rev: 5.3

Date: Friday, June 07, 2013 | Sheet 1 of 47

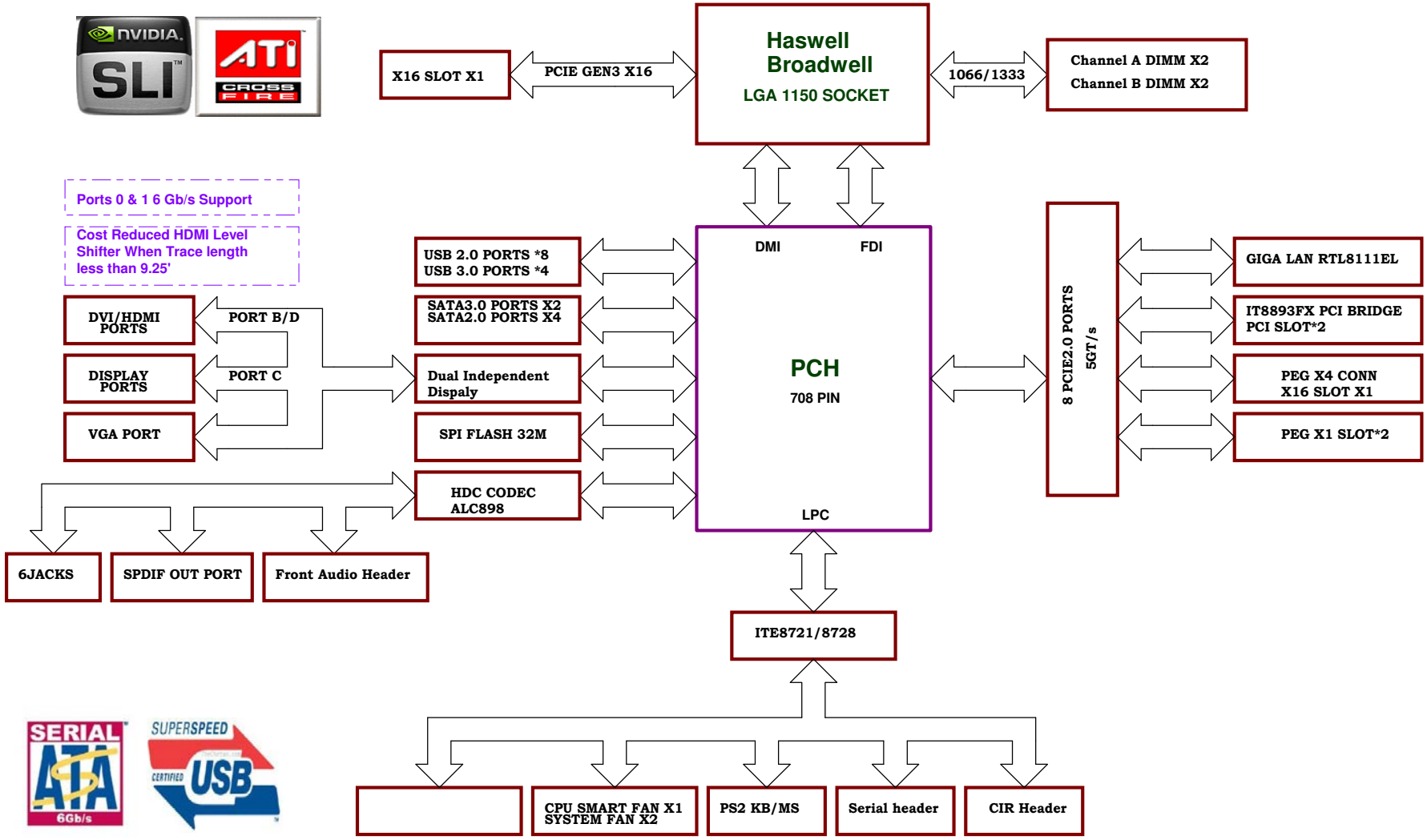

◇BIOSTAR'S PROPRIETARY INFORMATION◆

◇Any unauthorized use, reproduction, duplication, or disclosure of this document will be subject to the applicable civil and/orcriminal penalties.◆

映泰股份有限公司
BIOSTAR GROUP

Title: BLOCK DIAGRAM

Size: B | Document Number: IZ87D-AHT | Rev: 5.3

Date: Friday, June 07, 2013 | Sheet 2 of 47

◇BIOSTAR'S PROPRIETARY INFORMATION◆

◇Any unauthorized use, reproduction, duplication, or disclosure of this document will be subject to the applicable civil and/orcriminal penalties.◆

映泰股份有限公司
BIOSTAR GROUP

Title: POWER DELIVERY

Size	Document Number	Rev
Custom	IZ87D-AHT	5.3

Date: Friday, June 07, 2013 Sheet 3 of 47

◇BIOSTAR'S PROPRIETARY INFORMATION◆

◇Any unauthorized use, reproduction, duplication, or disclosure of this document will be subject to the applicable civil and/orcriminal penalties.◆

映泰股份有限公司
BIOSTAR GROUP

Title: CHANGELIST

Size	Document Number	Rev
B	IZ87D-AHT	5.3

Date: Friday, June 07, 2013 Sheet 4 of 47

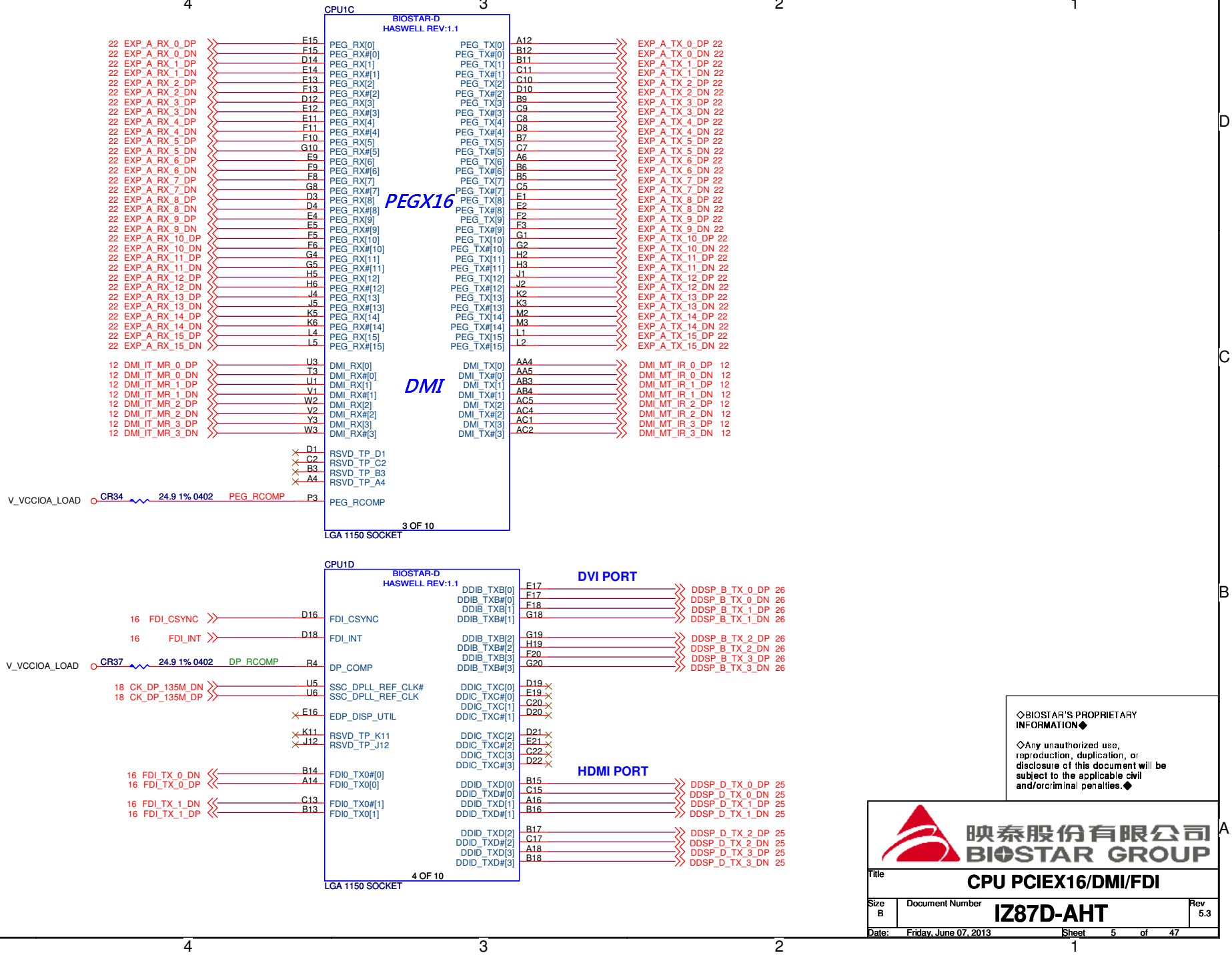

◇BIOSTAR'S PROPRIETARY INFORMATION◆

◇Any unauthorized use, reproduction, duplication, or disclosure of this document will be subject to the applicable civil and/orcriminal penalties.◆

映泰股份有限公司
BIOSTAR GROUP

Title	CPU PCIEX16/DMI/FDI	
Size B	Document Number IZ87D-AHT	Rev 5.3
Date: Friday, June 07, 2013	Sheet 5 of 47	

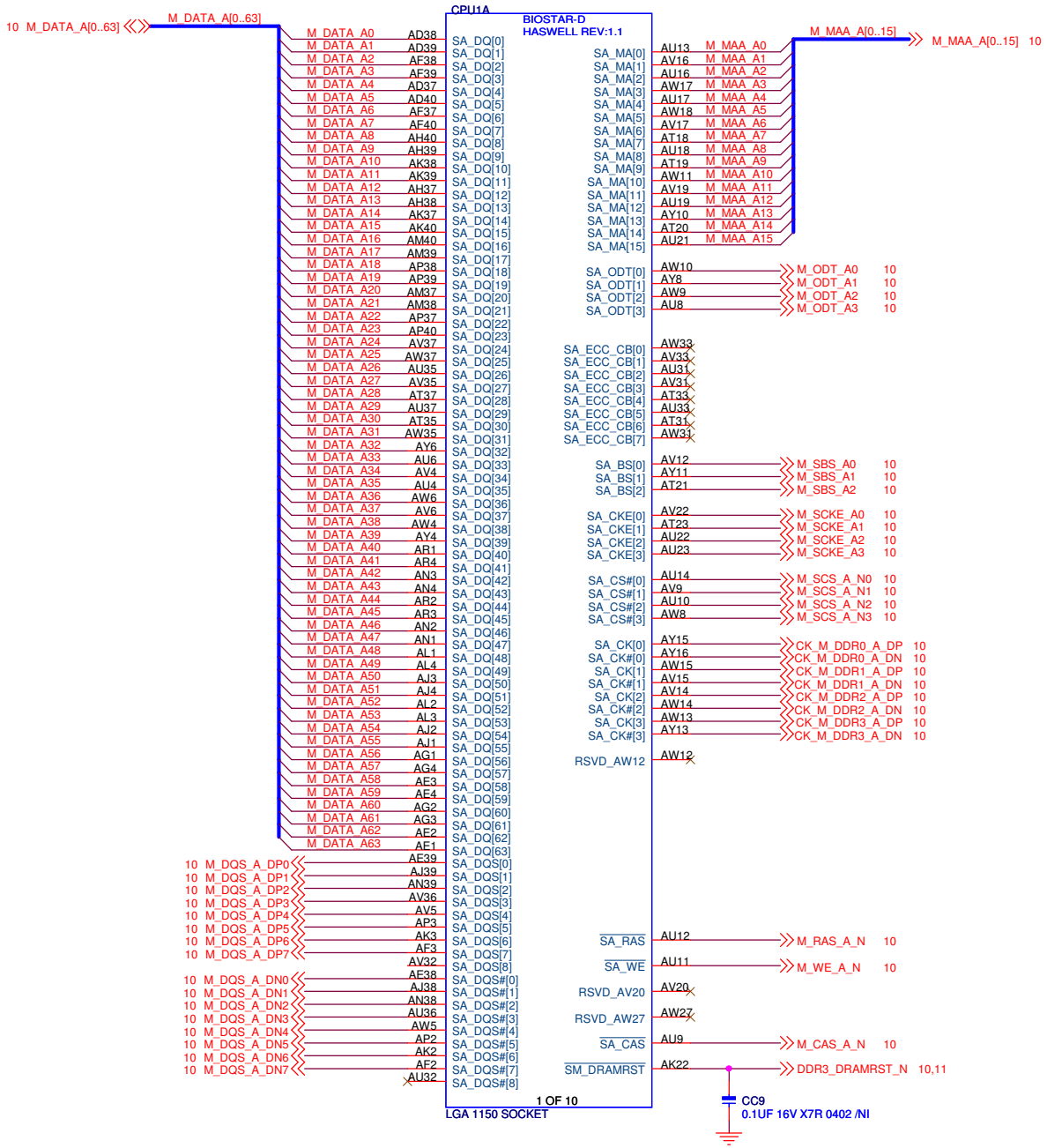

Title	CPU DDR CHANNEL A
Size	B
Document Number	IZ87D-AHT
Rev	5.3
Date:	Friday, June 07, 2013
Sheet	6 of 47

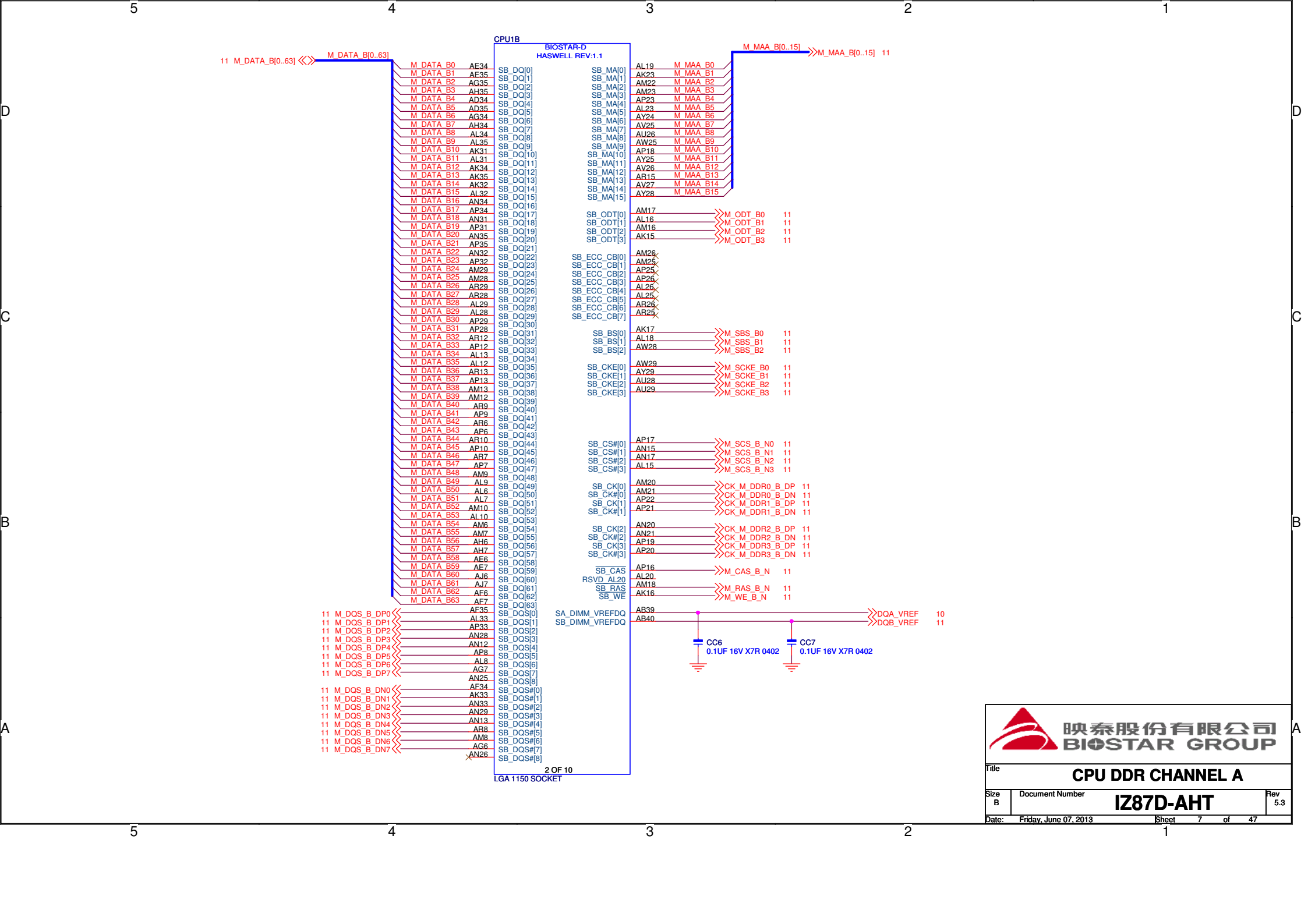
CPU1B
BIOSTAR-D
HASWELL REV:1.1
2 OF 10
LGA 1150 SOCKET
M_DATA_B[0..63]
M_MAA_B[0..15]
M_ODT_B0
M_ODT_B1
M_ODT_B2
M_ODT_B3
M_SBS_B0
M_SBS_B1
M_SBS_B2
M_SCKE_B0
M_SCKE_B1
M_SCKE_B2
M_SCKE_B3
M_SCS_B_N0
M_SCS_B_N1
M_SCS_B_N2
M_SCS_B_N3
CK_M_DDR0_B_DP
CK_M_DDR0_B_DN
CK_M_DDR1_B_DP
CK_M_DDR1_B_DN
CK_M_DDR2_B_DP
CK_M_DDR2_B_DN
CK_M_DDR3_B_DP
CK_M_DDR3_B_DN
M_CAS_B_N
M_RAS_B_N
M_WE_B_N
DQA_VREF
DQB_VREF
CC6
0.1UF 16V X7R 0402
CC7
0.1UF 16V X7R 0402
映泰股份有限公司
BIOSTAR GROUP
Title
CPU DDR CHANNEL A
Size
B
Document Number
IZ87D-AHT
Rev
5.3
Date:
Friday, June 07, 2013
Sheet
7
of
47

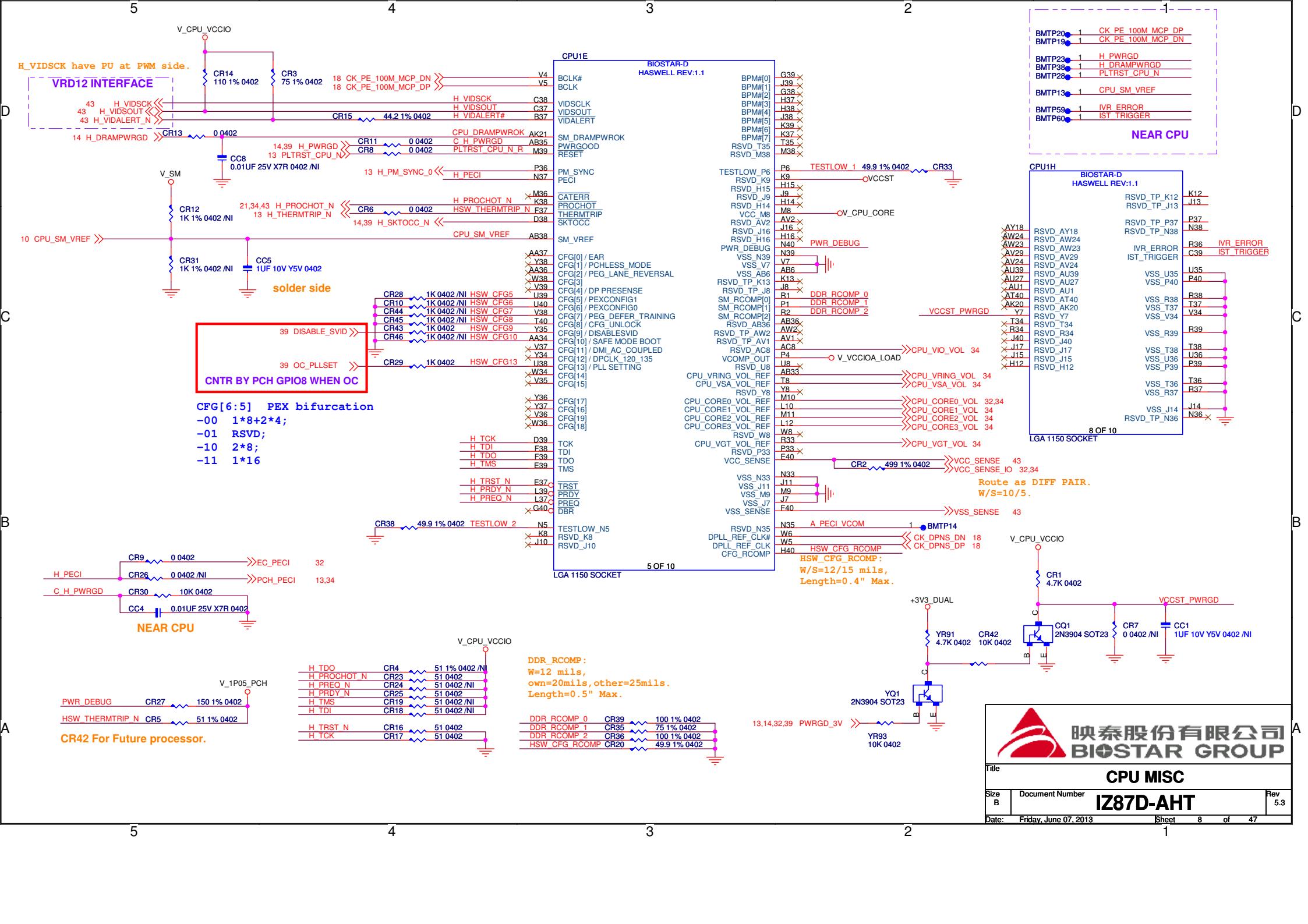

H_VIDSCK have PU at PWM side.
VRD12 INTERFACE
V_CPU_VCCIO
CR14 110 1% 0402
CR3 75 1% 0402
18 CK_PE_100M_MCP_DN
18 CK_PE_100M_MCP_DP
43 H_VIDSCK
43 H_VIDSOUT
43 H_VIDALERT_N
CR15 44.2 1% 0402
14 H_DRAMPWRGD
CR13 0 0402
CC8 0.01UF 25V X7R 0402 /NI
14,39 H_PWRGD
13 PLTRST_CPU_N
CR11 0 0402
CR8 0 0402
CPU_DRAMPWROK
C_H_PWRGD
PLTRST_CPU_N_R
13 H_PM_SYNC_0
H_PECI
V_SM
CR12 1K 1% 0402 /NI
21,34,43 H_PROCHOT_N
13 H_THERMTRIP_N
CR6 0 0402
H_PROCHOT_N
HSW_THERMTRIP_N
14,39 H_SKTOCC_N
10 CPU_SM_VREF
CR31 1K 1% 0402 /NI
CC5 1UF 10V Y5V 0402
solder side
CPU1E
BIOSTAR-D
HASWELL REV:1.1
BCLK#
BCLK
VIDSCLK
VIDSOUT
VIDALERT
SM_DRAMPWROK
PWRGOOD
RESET
PM_SYNC
PECI
CATERR
PROCHOT
THERMTRIP
SKTOCC
SM_VREF
CFG[0] / EAR
CFG[1] / PCHLESS_MODE
CFG[2] / PEG_LANE_REVERSAL
CFG[3]
CFG[4] / DP PRESENSE
CFG[5] / PEXCONFIG1
CFG[6] / PEXCONFIG0
CFG[7] / PEG_DEFER_TRAINING
CFG[8] / CFG_UNLOCK
CFG[9] / DISABLESVID
CFG[10] / SAFE MODE BOOT
CFG[11] / DMI_AC_COUPLED
CFG[12] / DPCLK_120_135
CFG[13] / PLL SETTING
CFG[14]
CFG[15]
CFG[17]
CFG[16]
CFG[19]
CFG[18]
TCK
TDI
TDO
TMS
TRST
PRDY
PREQ
DBR
TESTLOW_N5
RSVD_K8
RSVD_J10
BPM#[0]
BPM#[1]
BPM#[2]
BPM#[3]
BPM#[4]
BPM#[5]
BPM#[6]
BPM#[7]
RSVD_T35
RSVD_M38
TESTLOW_P6
RSVD_K9
RSVD_H15
RSVD_J9
RSVD_H14
VCC_M8
RSVD_AV2
RSVD_J16
RSVD_H16
PWR_DEBUG
VSS_N39
VSS_V7
VSS_AB6
RSVD_TP_K13
RSVD_TP_J8
SM_RCOMP[0]
SM_RCOMP[1]
SM_RCOMP[2]
RSVD_AB36
RSVD_TP_AW2
RSVD_TP_AV1
RSVD_AC8
VCOMP_OUT
RSVD_U8
CPU_VRING_VOL_REF
CPU_VSA_VOL_REF
RSVD_Y8
CPU_CORE0_VOL_REF
CPU_CORE1_VOL_REF
CPU_CORE2_VOL_REF
CPU_CORE3_VOL_REF
RSVD_W8
CPU_VGT_VOL_REF
RSVD_P33
VCC_SENSE
VSS_N33
VSS_J11
VSS_M9
VSS_J7
VSS_SENSE
RSVD_N35
DPLL_REF_CLK#
DPLL_REF_CLK
CFG_RCOMP
5 OF 10
LGA 1150 SOCKET
TESTLOW_1 49.9 1% 0402 CR33
VCCST
V_CPU_CORE
PWR_DEBUG
DDR_RCOMP_0
DDR_RCOMP_1
DDR_RCOMP_2
VCCST_PWRGD
CPU_VIO_VOL 34
V_VCCIOA_LOAD
CPU_VRING_VOL 34
CPU_VSA_VOL 34
CPU_CORE0_VOL 32,34
CPU_CORE1_VOL 34
CPU_CORE2_VOL 34
CPU_CORE3_VOL 34
CPU_VGT_VOL 34
CR2 499 1% 0402
VCC_SENSE 43
VCC_SENSE_IO 32,34
Route as DIFF PAIR.
W/S=10/5.
VSS_SENSE 43
A_PECI_VCOM
BMTP14
CK_DPNS_DN 18
CK_DPNS_DP 18
HSW_CFG_RCOMP
HSW_CFG_RCOMP:
W/S=12/15 mils,
Length=0.4" Max.
BMTP20 CK_PE_100M_MCP_DP
BMTP19 CK_PE_100M_MCP_DN
BMTP23 H_PWRGD
BMTP38 H_DRAMPWRGD
BMTP28 PLTRST_CPU_N
BMTP13 CPU_SM_VREF
BMTP59 IVR_ERROR
BMTP60 IST_TRIGGER
NEAR CPU
CPU1H
BIOSTAR-D
HASWELL REV:1.1
RSVD_TP_K12
RSVD_TP_J13
RSVD_TP_P37
RSVD_TP_N38
RSVD_AY18
RSVD_AW24
RSVD_AW23
RSVD_AV29
RSVD_AV24
RSVD_AU39
RSVD_AU27
RSVD_AU1
RSVD_AT40
RSVD_AK20
RSVD_Y7
RSVD_T34
RSVD_R34
RSVD_J40
RSVD_J17
RSVD_J15
RSVD_H12
IVR_ERROR
IST_TRIGGER
VSS_U35
VSS_P40
VSS_R38
VSS_T37
VSS_V34
VSS_R39
VSS_T38
VSS_U36
VSS_P39
VSS_T36
VSS_R37
VSS_J14
RSVD_TP_N36
8 OF 10
LGA 1150 SOCKET
39 DISABLE_SVID
39 OC_PLLSET
CNTR BY PCH GPIO8 WHEN OC
CR28 1K 0402 /NI HSW_CFG5
CR10 1K 0402 /NI HSW_CFG6
CR44 1K 0402 /NI HSW_CFG7
CR45 1K 0402 /NI HSW_CFG8
CR43 1K 0402 HSW_CFG9
CR46 1K 0402 /NI HSW_CFG10
CR29 1K 0402 HSW_CFG13
CFG[6:5] PEX bifurcation
-00 1*8+2*4;
-01 RSVD;
-10 2*8;
-11 1*16
H_TCK
H_TDI
H_TDO
H_TMS
H_TRST_N
H_PRDY_N
H_PREQ_N
CR38 49.9 1% 0402 TESTLOW_2
CR9 0 0402 EC_PECI 32
H_PECI CR26 0 0402 /NI PCH_PECI 13,34
C_H_PWRGD CR30 10K 0402
CC4 0.01UF 25V X7R 0402
NEAR CPU
V_CPU_VCCIO
CR1 4.7K 0402
+3V3_DUAL
YR91 4.7K 0402
CR42 10K 0402
CQ1 2N3904 SOT23
CR7 0 0402 /NI
CC1 1UF 10V Y5V 0402 /NI
VCCST_PWRGD
YQ1 2N3904 SOT23
13,14,32,39 PWRGD_3V
YR93 10K 0402
V_CPU_VCCIO
H_TDO CR4 51 1% 0402 /NI
H_PROCHOT_N CR23 51 0402
H_PREQ_N CR24 51 0402 /NI
H_PRDY_N CR25 51 0402
H_TMS CR19 51 0402 /NI
H_TDI CR18 51 0402 /NI
H_TRST_N CR16 51 0402
H_TCK CR17 51 0402
DDR_RCOMP:
W=12 mils,
own=20mils,other=25mils.
Length=0.5" Max.
DDR_RCOMP_0 CR39 100 1% 0402
DDR_RCOMP_1 CR35 75 1% 0402
DDR_RCOMP_2 CR36 100 1% 0402
HSW_CFG_RCOMP CR20 49.9 1% 0402
V_1P05_PCH
PWR_DEBUG CR27 150 1% 0402
HSW_THERMTRIP_N CR5 51 1% 0402
CR42 For Future processor.
映泰股份有限公司
BIOSTAR GROUP
Title
CPU MISC
Size B
Document Number
IZ87D-AHT
Rev 5.3
Date: Friday, June 07, 2013
Sheet 8 of 47

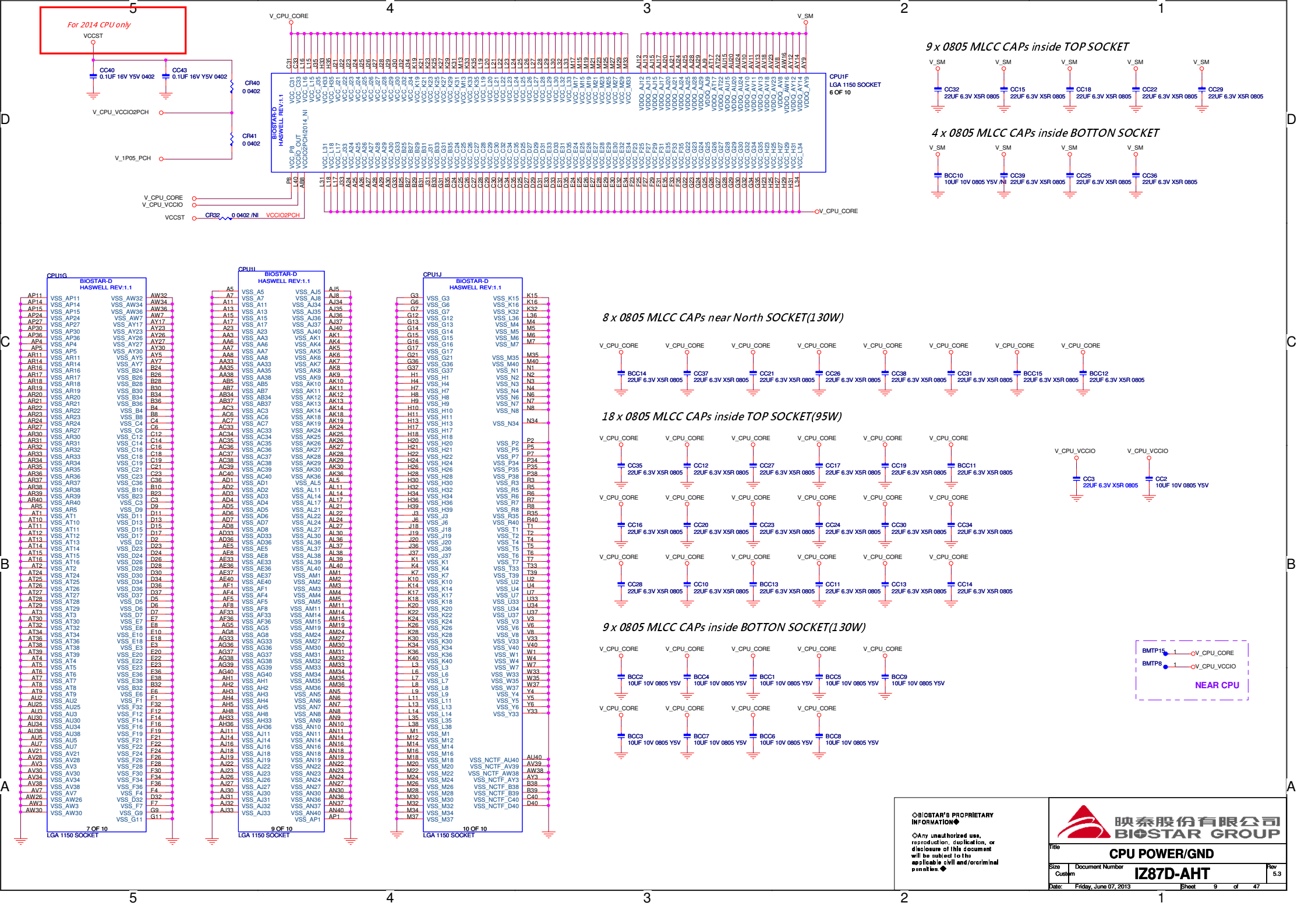

◇BIOSTAR'S PROPRIETARY INFORMATION◆

◇Any unauthorized use, reproduction, duplication, or disclosure of this document will be subject to the applicable civil and/orcriminal penalties.◆

映泰股份有限公司 BIOSTAR GROUP

Title: CPU POWER/GND

Size: Custom | Document Number: IZ87D-AHT | Rev: 5.3

Date: Friday, June 07, 2013 | Sheet 9 of 47

MEMORY PART: M+Reference

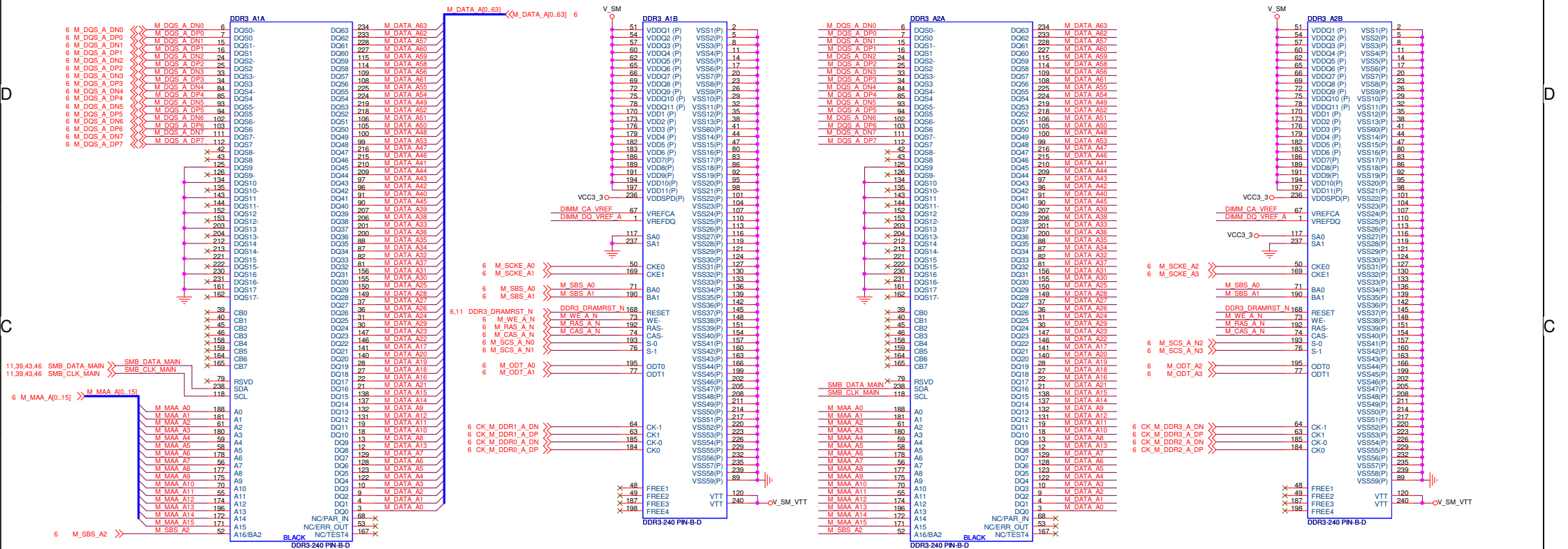

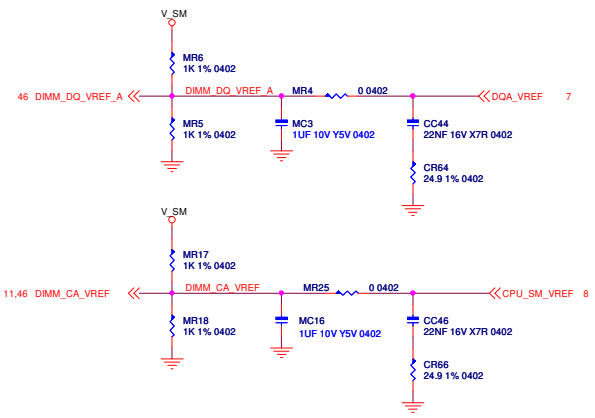

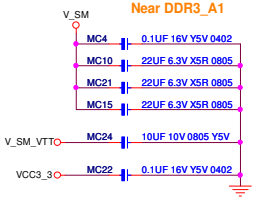

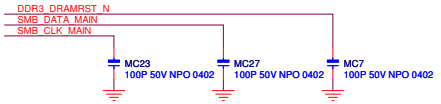

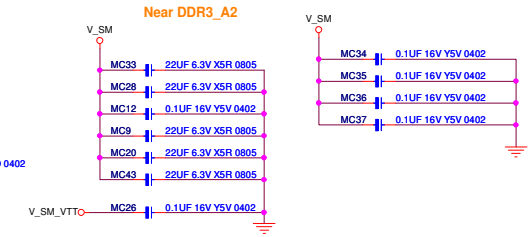

◇BIOSTAR'S PROPRIETARY INFORMATION◆

◇Any unauthorized use, reproduction, duplication, or disclosure of this document will be subject to the applicable civil and/orcriminal penalties.◆

映泰股份有限公司 BIOSTAR GROUP

Title: DDR2 DIMMA1/A2

Size	Document Number	Rev
Custom	IZ87D-AHT	5.3

Date: Friday, June 07, 2013 Sheet 10 of 47

MEMORY PART: M+Reference

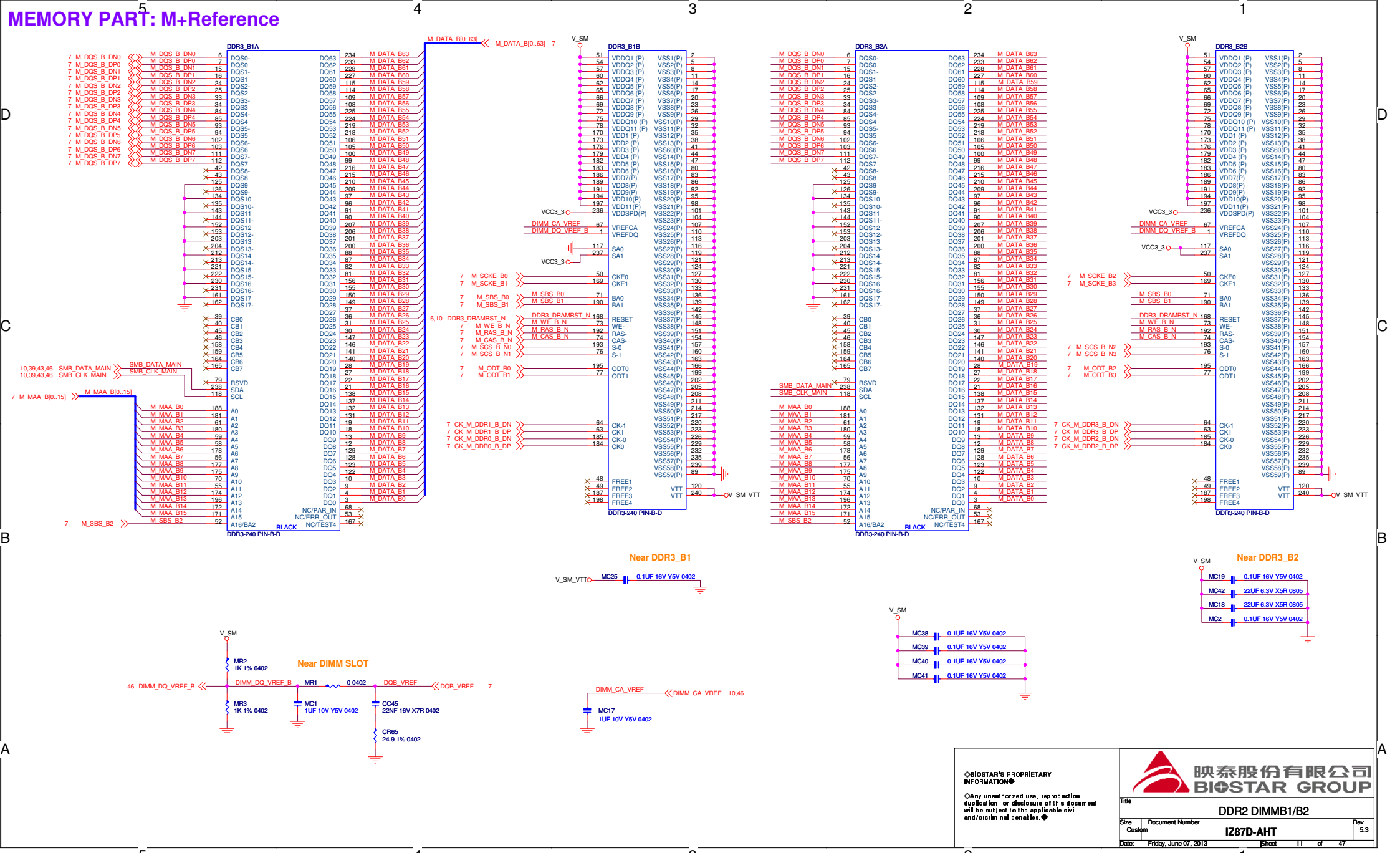

◇BIOSTAR'S PROPRIETARY INFORMATION◆

◇Any unauthorized use, reproduction, duplication, or disclosure of this document will be subject to the applicable civil and/orcriminal penalties.◆

映泰股份有限公司
BIOSTAR GROUP

Title	DDR2 DIMMB1/B2	
Size: Custom	Document Number: IZ87D-AHT	Rev: 5.3
Date: Friday, June 07, 2013	Sheet 11 of 47	

PCH PART: Y+Reference

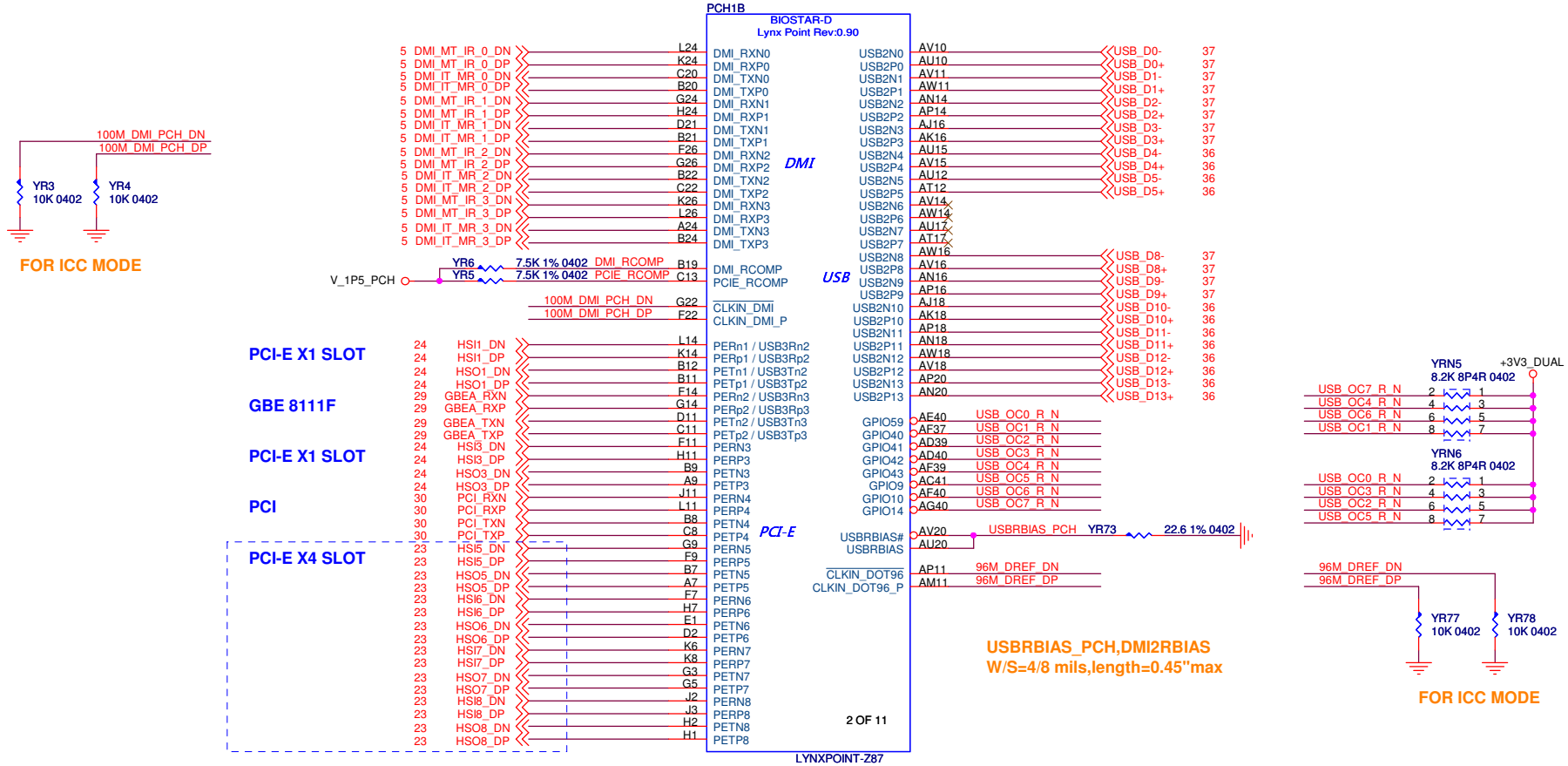

Title	PCH DMI/PCIE/USB		
Size B	Document Number IZ87D-AHT		Rev 5.3
Date: Friday, June 07, 2013	Sheet 12 of 47		

PCH PART: Y+Reference

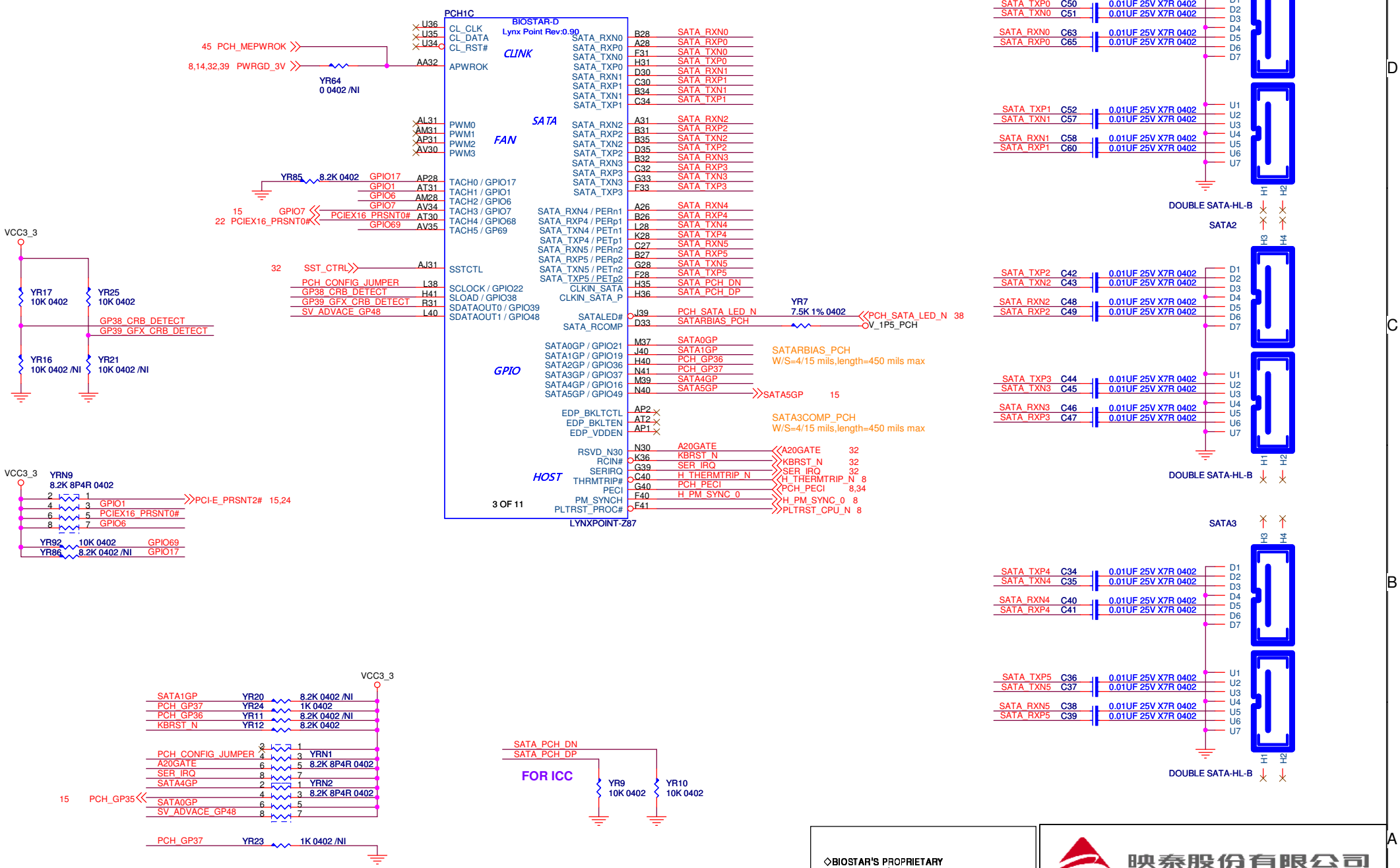

◇BIOSTAR'S PROPRIETARY INFORMATION◆

◇Any unauthorized use, reproduction, duplication, or disclosure of this document will be subject to the applicable civil and/orcriminal penalties.◆

映泰股份有限公司 BIOSTAR GROUP

Title	PCH CLINK/SATA/CPU HOST	
Size: Custom	Document Number: IZ87D-AHT	Rev: 5.3
Date: Friday, June 07, 2013	Sheet 13 of 47	

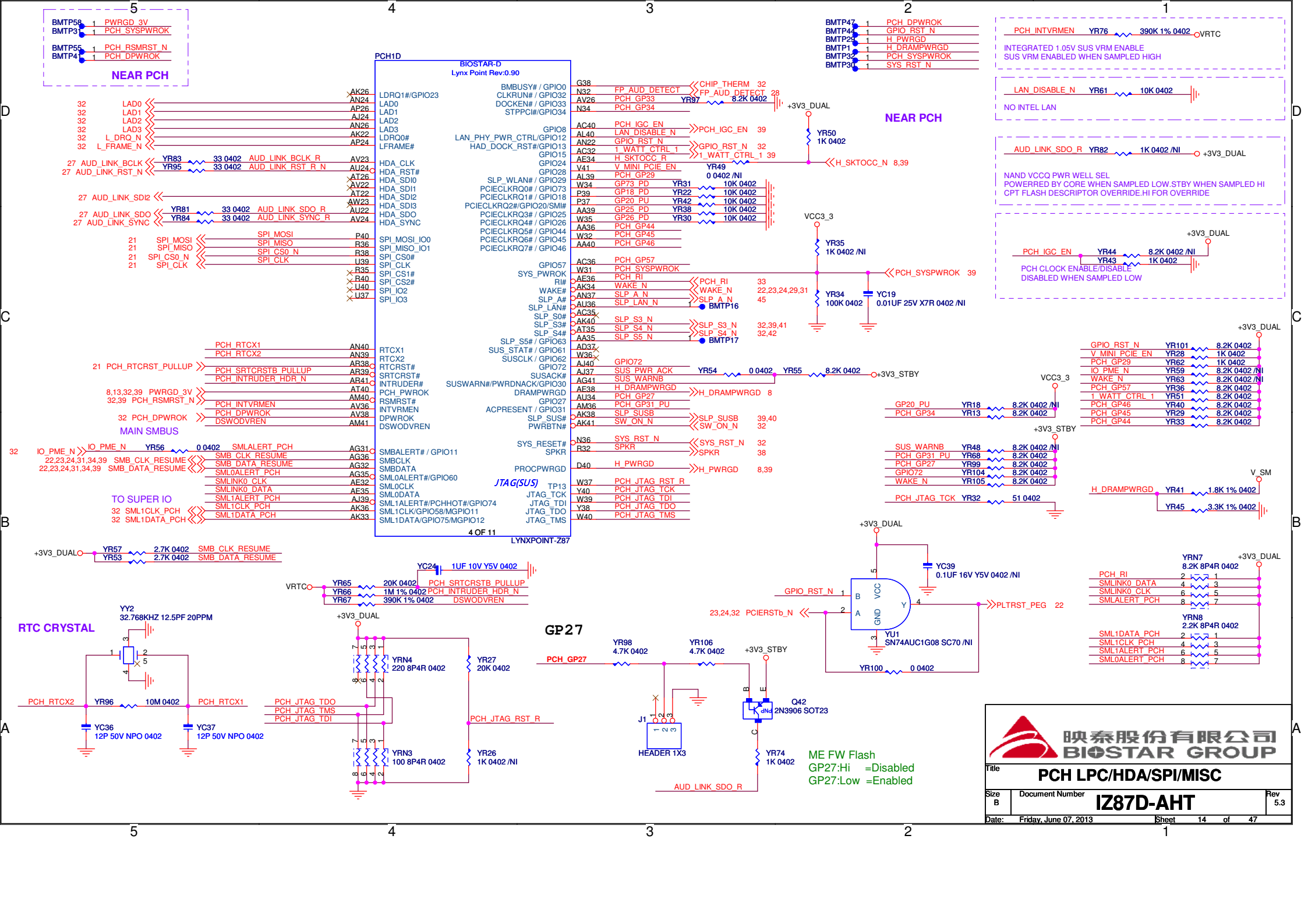
NEAR PCH
PCH1D
BIOSTAR-D
Lynx Point Rev:0.90
LYNXPOINT-Z87
4 OF 11
MAIN SMBUS
TO SUPER IO
JTAG(SUS)
RTC CRYSTAL
GP27
NEAR PCH
INTEGRATED 1.05V SUS VRM ENABLE
SUS VRM ENABLED WHEN SAMPLED HIGH
NO INTEL LAN
NAND VCCQ PWR WELL SEL
POWERRED BY CORE WHEN SAMPLED LOW.STBY WHEN SAMPLED HI
CPT FLASH DESCRIPTOR OVERRIDE.HI FOR OVERRIDE
PCH CLOCK ENABLE/DISABLE
DISABLED WHEN SAMPLED LOW
ME FW Flash
GP27:Hi =Disabled
GP27:Low =Enabled
映泰股份有限公司
BIOSTAR GROUP
Title
PCH LPC/HDA/SPI/MISC
Size B
Document Number
IZ87D-AHT
Rev 5.3
Date: Friday, June 07, 2013
Sheet 14 of 47

PCH PART: Y+Reference

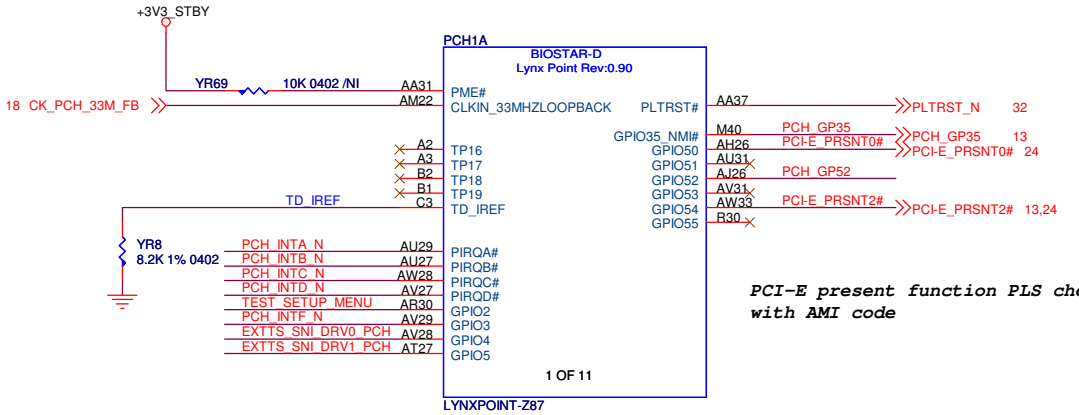

PCI-E present function PLS check with AMI code

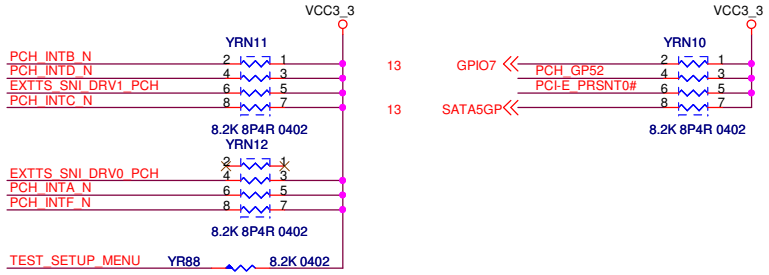


```
TEST SETUP MENU TABLE
GP2    Board Style
1:Disable(Default)
0:Test setup menu ENable.
```


◇BIOSTAR'S PROPRIETARY INFORMATION◆

◇Any unauthorized use, reproduction, duplication, or disclosure of this document will be subject to the applicable civil and/orcriminal penalties.◆

映泰股份有限公司 BIOSTAR GROUP

Title	PCH NVRAM	
Size B	Document Number IZ87D-AHT	Rev 5.3
Date: Friday, June 07, 2013	Sheet 15 of 47	

PCH PART: Y+Reference

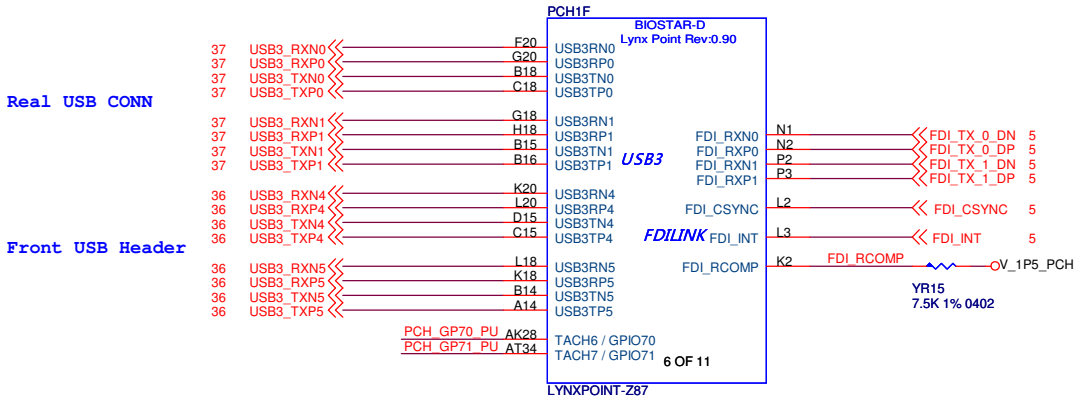

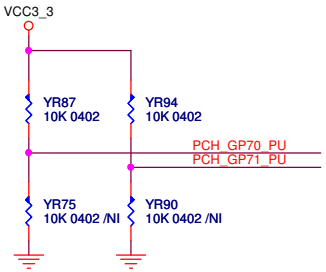

FOR LPT:
GP70 STRAP---USB3 PORT4,
GP71 STRAP---USB3 PORT5.
SOFT STRAP TO DETERMINE NATIVE FUNCTION.

◇BIOSTAR'S PROPRIETARY INFORMATION◆

◇Any unauthorized use, reproduction, duplication, or disclosure of this document will be subject to the applicable civil and/orcriminal penalties.◆

映泰股份有限公司 BIOSTAR GROUP

Title	PCH USB3/FDI LINK	
Size B	Document Number IZ87D-AHT	Rev 5.3
Date: Friday, June 07, 2013	Sheet 16 of 47	

PCH PART: Y+Reference

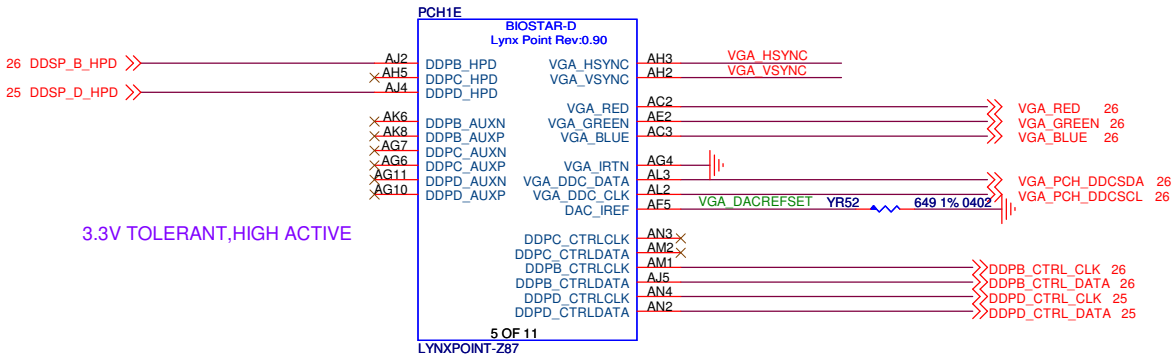

3.3V TOLERANT,HIGH ACTIVE

TRACE W/S:4/10 MIL

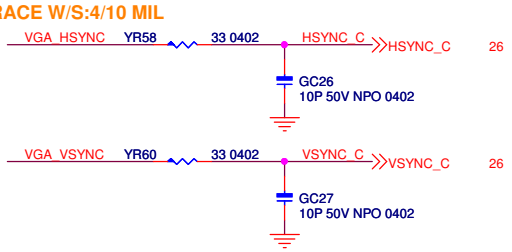

REMOVE LEVEL SHIFTER WHEN TRACE LENGHT LESS THAN 9.25 INCHES

	FUNCTION
PORTB	DVI OR SDVO
PORTC	DISPLAY PORT
PORTD	HDMI/DVI/eDP

◇BIOSTAR'S PROPRIETARY INFORMATION◆

◇Any unauthorized use, reproduction, duplication, or disclosure of this document will be subject to the applicable civil and/orcriminal penalties.◆

映泰股份有限公司 BIOSTAR GROUP

Title: PCH VGA/DISPLAY PORT

Size: B | Document Number: IZ87D-AHT | Rev: 5.3

Date: Friday, June 07, 2013 | Sheet 17 of 47

PCH PART: Y+Reference

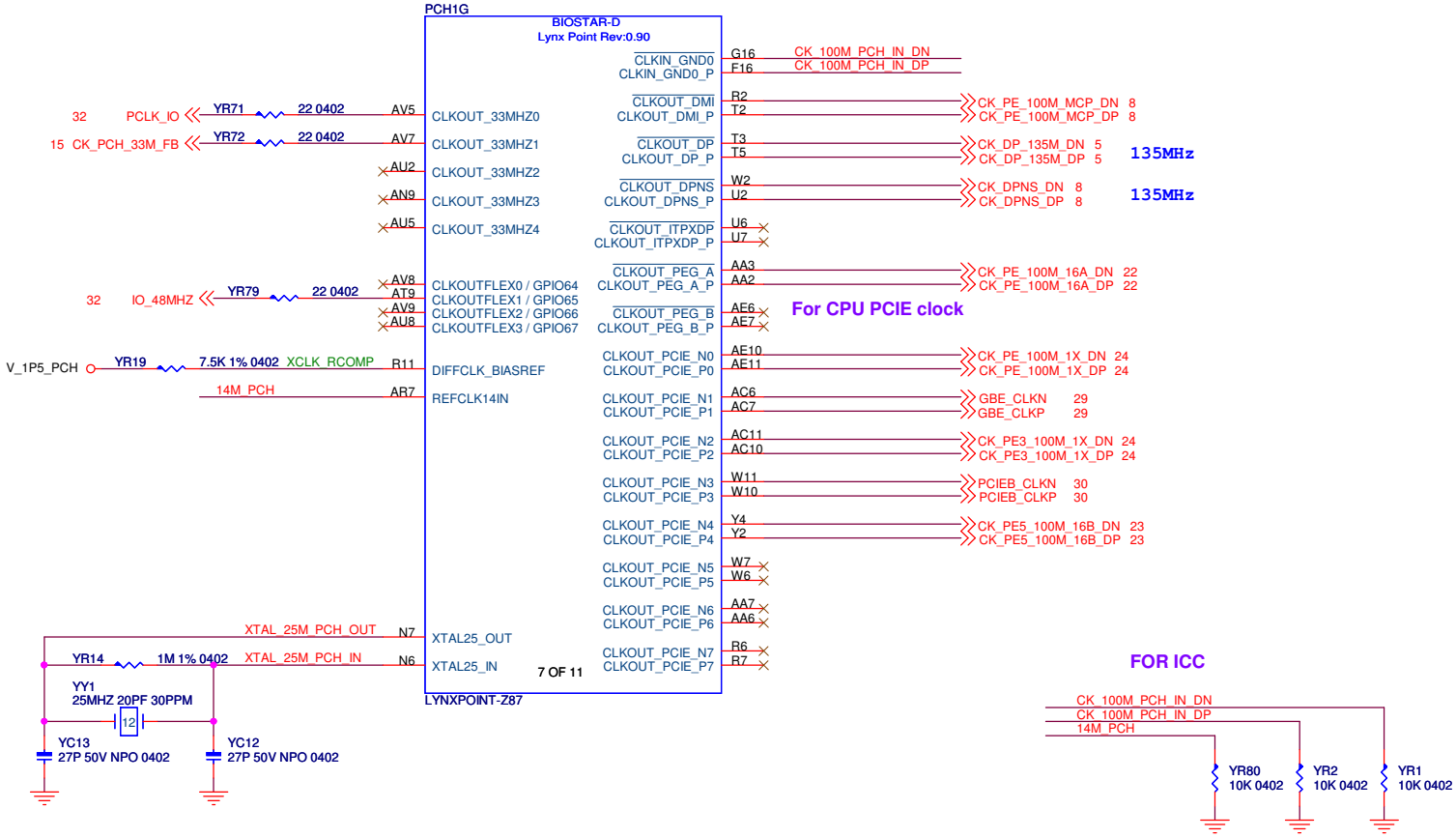

映泰股份有限公司
BIOSTAR GROUP

Title	PCH CLOCK BUFFER	
Size B	Document Number IZ87D-AHT	Rev 5.3
Date: Friday, June 07, 2013	Sheet 18 of 47	

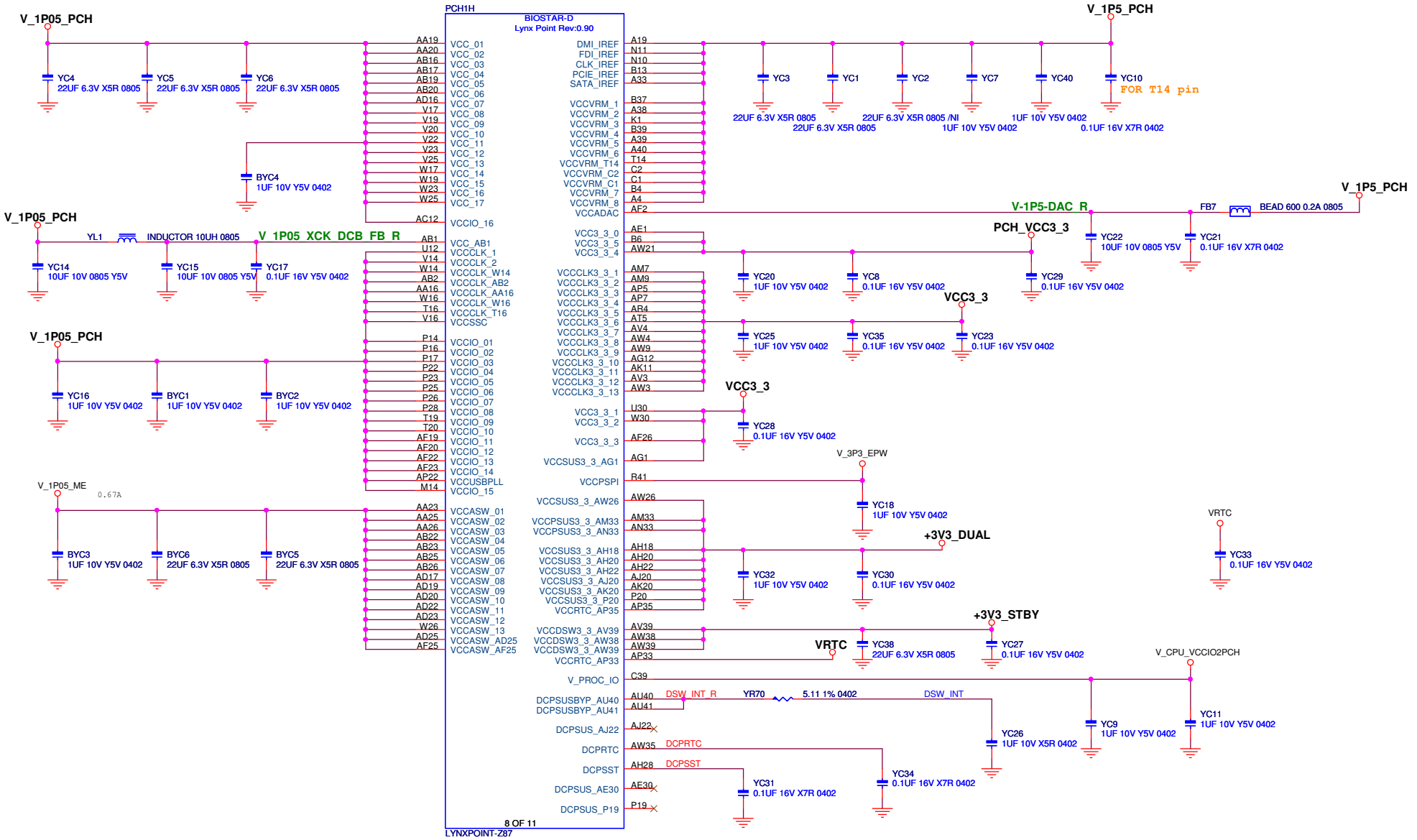

映泰股份有限公司 BIOSTAR GROUP

Title: PCH POWER

Size	Document Number	Rev
Custom	IZ87D-AHT	5.3

Date: Friday, June 07, 2013 Sheet 19 of 47

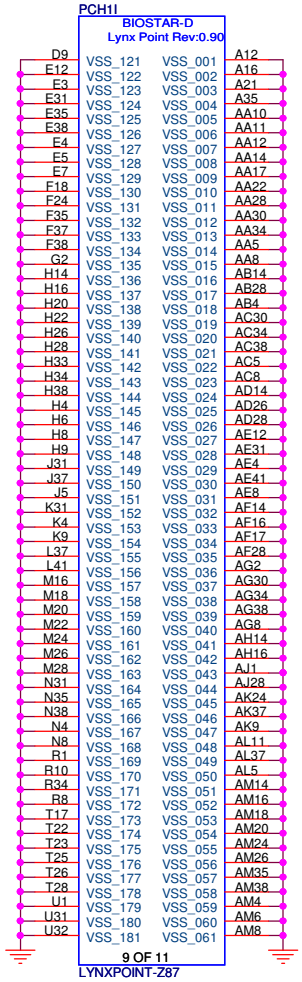

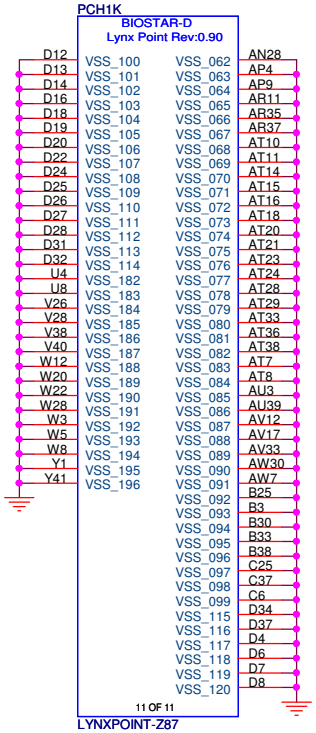

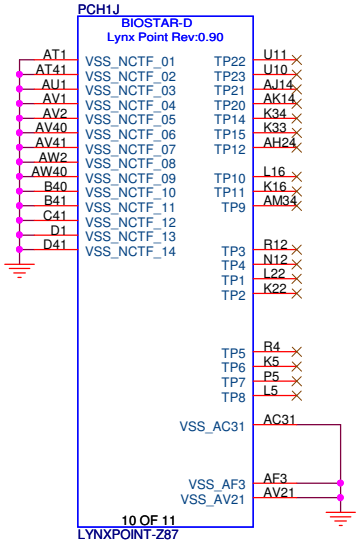



Title	PCH GND	
Size B	Document Number IZ87D-AHT	Rev 5.3
Date: Friday, June 07, 2013	Sheet 20 of 47	

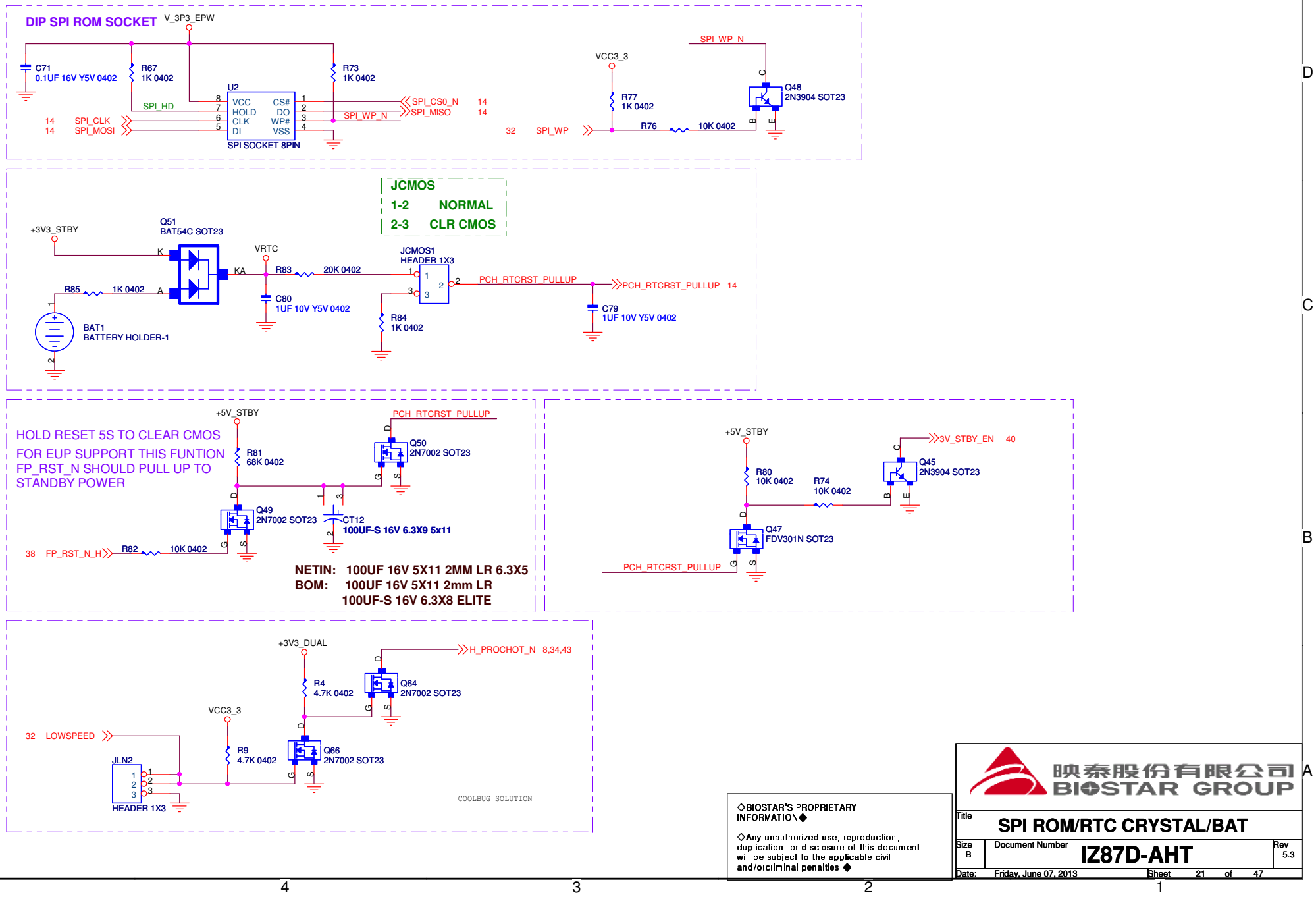

◇BIOSTAR'S PROPRIETARY INFORMATION◆

◇Any unauthorized use, reproduction, duplication, or disclosure of this document will be subject to the applicable civil and/orciminal penalties.◆

映泰股份有限公司
BIOSTAR GROUP

Title: SPI ROM/RTC CRYSTAL/BAT

Size	Document Number	Rev
B	IZ87D-AHT	5.3

Date: Friday, June 07, 2013 Sheet 21 of 47

SLOT PART: E+Reference

Value:180 nF - 265 nF

450 mils max to connector pin

5 EXP_A_TX_0_DP	EC7	0.22UF 10V X5R 0402	EEXP_A_TXP_0	
5 EXP_A_TX_0_DN	EC6	0.22UF 10V X5R 0402	EEXP_A_TXN_0	
5 EXP_A_TX_1_DP	EC8	0.22UF 10V X5R 0402	EEXP_A_TXP_1	
5 EXP_A_TX_1_DN	EC9	0.22UF 10V X5R 0402	EEXP_A_TXN_1	
5 EXP_A_TX_2_DP	EC10	0.22UF 10V X5R 0402	EEXP_A_TXP_2	
5 EXP_A_TX_2_DN	EC11	0.22UF 10V X5R 0402	EEXP_A_TXN_2	
5 EXP_A_TX_3_DP	EC13	0.22UF 10V X5R 0402	EEXP_A_TXP_3	
5 EXP_A_TX_3_DN	EC12	0.22UF 10V X5R 0402	EEXP_A_TXN_3	
5 EXP_A_TX_4_DP	EC14	0.22UF 10V X5R 0402	EEXP_A_TXP_4	
5 EXP_A_TX_4_DN	EC15	0.22UF 10V X5R 0402	EEXP_A_TXN_4	
5 EXP_A_TX_5_DP	EC16	0.22UF 10V X5R 0402	EEXP_A_TXP_5	
5 EXP_A_TX_5_DN	EC17	0.22UF 10V X5R 0402	EEXP_A_TXN_5	
5 EXP_A_TX_6_DP	EC19	0.22UF 10V X5R 0402	EEXP_A_TXP_6	
5 EXP_A_TX_6_DN	EC18	0.22UF 10V X5R 0402	EEXP_A_TXN_6	
5 EXP_A_TX_7_DP	EC20	0.22UF 10V X5R 0402	EEXP_A_TXP_7	
5 EXP_A_TX_7_DN	EC21	0.22UF 10V X5R 0402	EEXP_A_TXN_7	
5 EXP_A_TX_8_DP	EC22	0.22UF 10V X5R 0402	EEXP_A_TXP_8	
5 EXP_A_TX_8_DN	EC23	0.22UF 10V X5R 0402	EEXP_A_TXN_8	
5 EXP_A_TX_9_DP	EC24	0.22UF 10V X5R 0402	EEXP_A_TXP_9	
5 EXP_A_TX_9_DN	EC25	0.22UF 10V X5R 0402	EEXP_A_TXN_9	
5 EXP_A_TX_10_DP	EC26	0.22UF 10V X5R 0402	EEXP_A_TXP_10	
5 EXP_A_TX_10_DN	EC27	0.22UF 10V X5R 0402	EEXP_A_TXN_10	
5 EXP_A_TX_11_DP	EC29	0.22UF 10V X5R 0402	EEXP_A_TXP_11	
5 EXP_A_TX_11_DN	EC28	0.22UF 10V X5R 0402	EEXP_A_TXN_11	
5 EXP_A_TX_12_DP	EC30	0.22UF 10V X5R 0402	EEXP_A_TXP_12	
5 EXP_A_TX_12_DN	EC31	0.22UF 10V X5R 0402	EEXP_A_TXN_12	
5 EXP_A_TX_13_DP	EC32	0.22UF 10V X5R 0402	EEXP_A_TXP_13	
5 EXP_A_TX_13_DN	EC33	0.22UF 10V X5R 0402	EEXP_A_TXN_13	
5 EXP_A_TX_14_DP	EC35	0.22UF 10V X5R 0402	EEXP_A_TXP_14	
5 EXP_A_TX_14_DN	EC34	0.22UF 10V X5R 0402	EEXP_A_TXN_14	
5 EXP_A_TX_15_DP	EC36	0.22UF 10V X5R 0402	EEXP_A_TXP_15	
5 EXP_A_TX_15_DN	EC37	0.22UF 10V X5R 0402	EEXP_A_TXN_15	

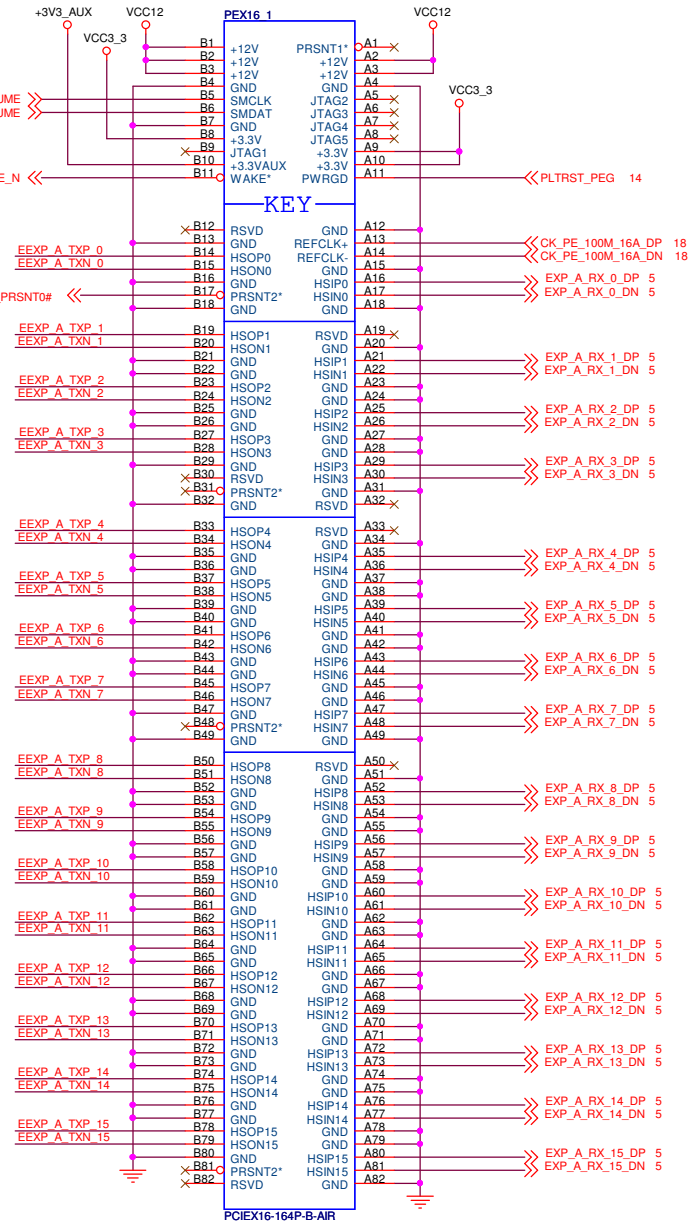

For ALL SOLID----270UF-S 16V 8X11 ELITE

For NO SOLID-----470UF 16V 8X11.5

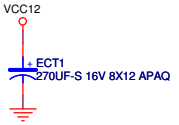

NETIN:560UF-S 6.3V 6.3X8 8X8

BOM: 1000UF 6.3V 8X12

560UF-S 6.3V 6.3X8 ELITE

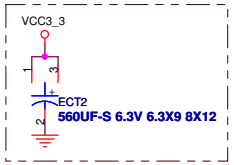

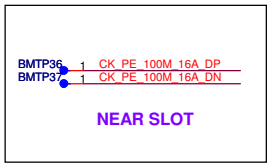

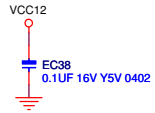

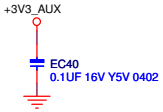

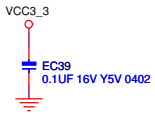

◇BIOSTAR'S PROPRIETARY INFORMATION◆

◇Any unauthorized use, reproduction, duplication, or disclosure of this document will be subject to the applicable civil and/or criminal penalties.◆

映泰股份有限公司 BIOSTAR GROUP

Title: PCIEX16 SLOT 1

Size: Custom | Document Number: IZ87D-AHT | Rev: 5.3

Date: Friday, June 07, 2013 | Sheet 22 of 47

SLOT PART: E+Reference

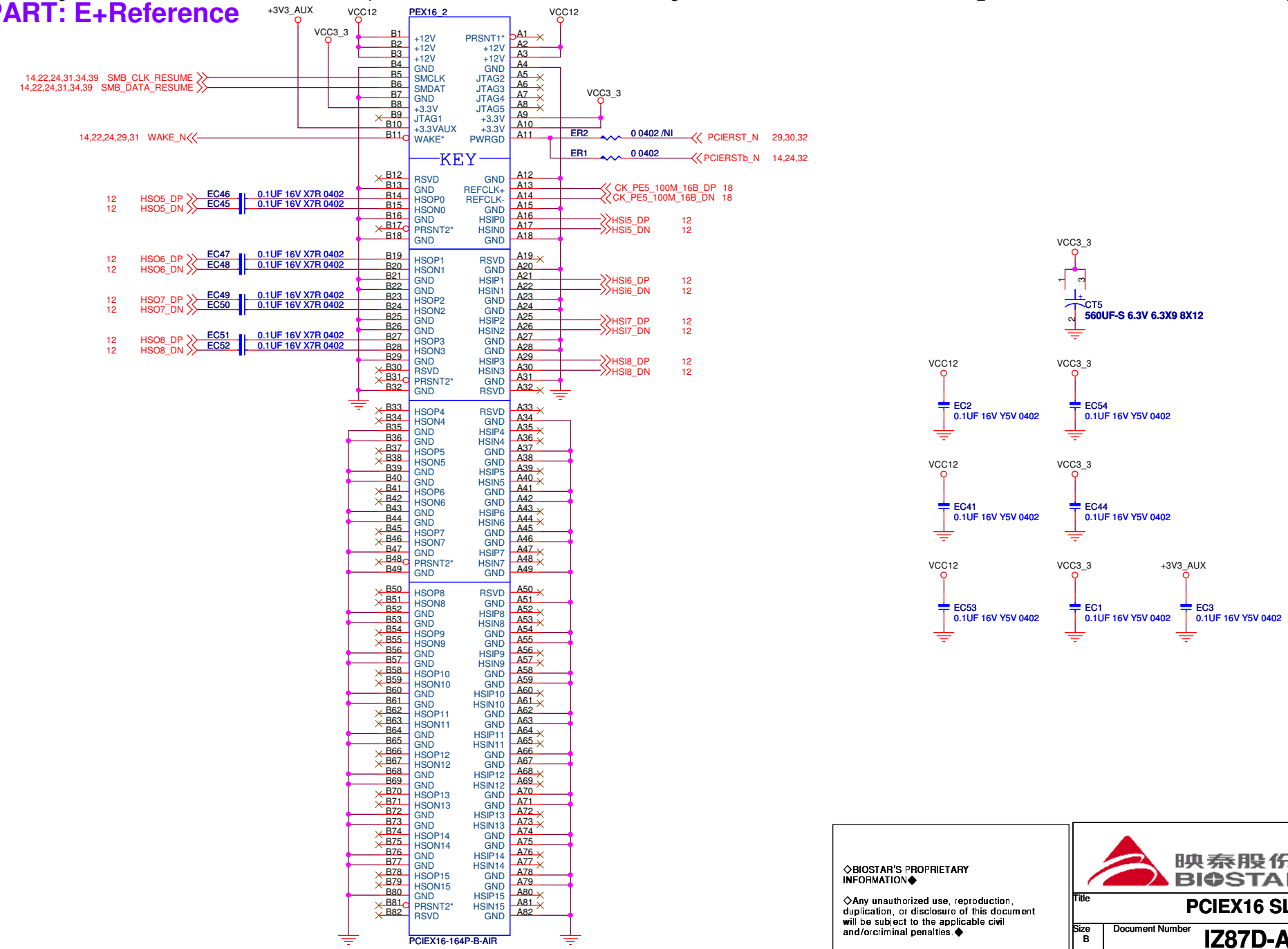

◇BIOSTAR'S PROPRIETARY INFORMATION◆

◇Any unauthorized use, reproduction, duplication, or disclosure of this document will be subject to the applicable civil and/orcriminal penalties.◆

映泰股份有限公司 BIOSTAR GROUP

Title	PCIEX16 SLOT2 (X4)	
Size B	Document Number IZ87D-AHT	Rev 5.3
Date: Friday, June 07, 2013	Sheet 23 of 47	

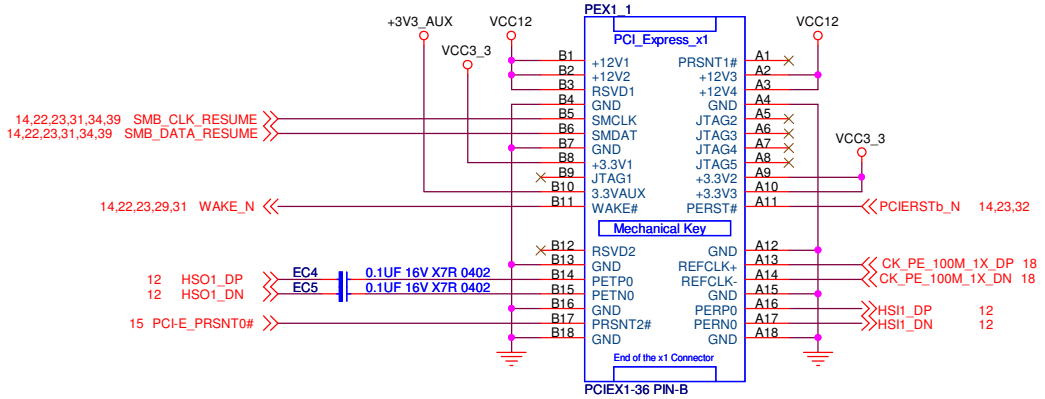

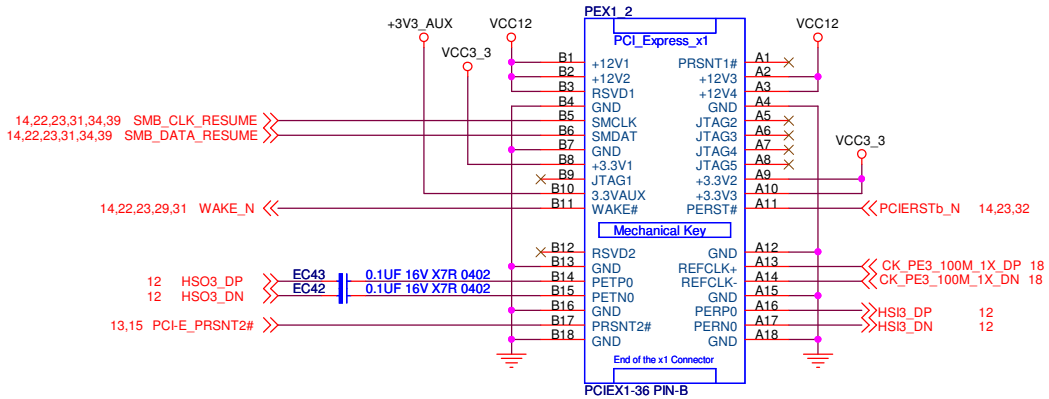

映泰股份有限公司
BIOSTAR GROUP

Title	PCIEX1 SLOT 1&2	
Size B	Document Number IZ87D-AHT	Rev 5.3
Date: Friday, June 07, 2013	Sheet 24 of 47	

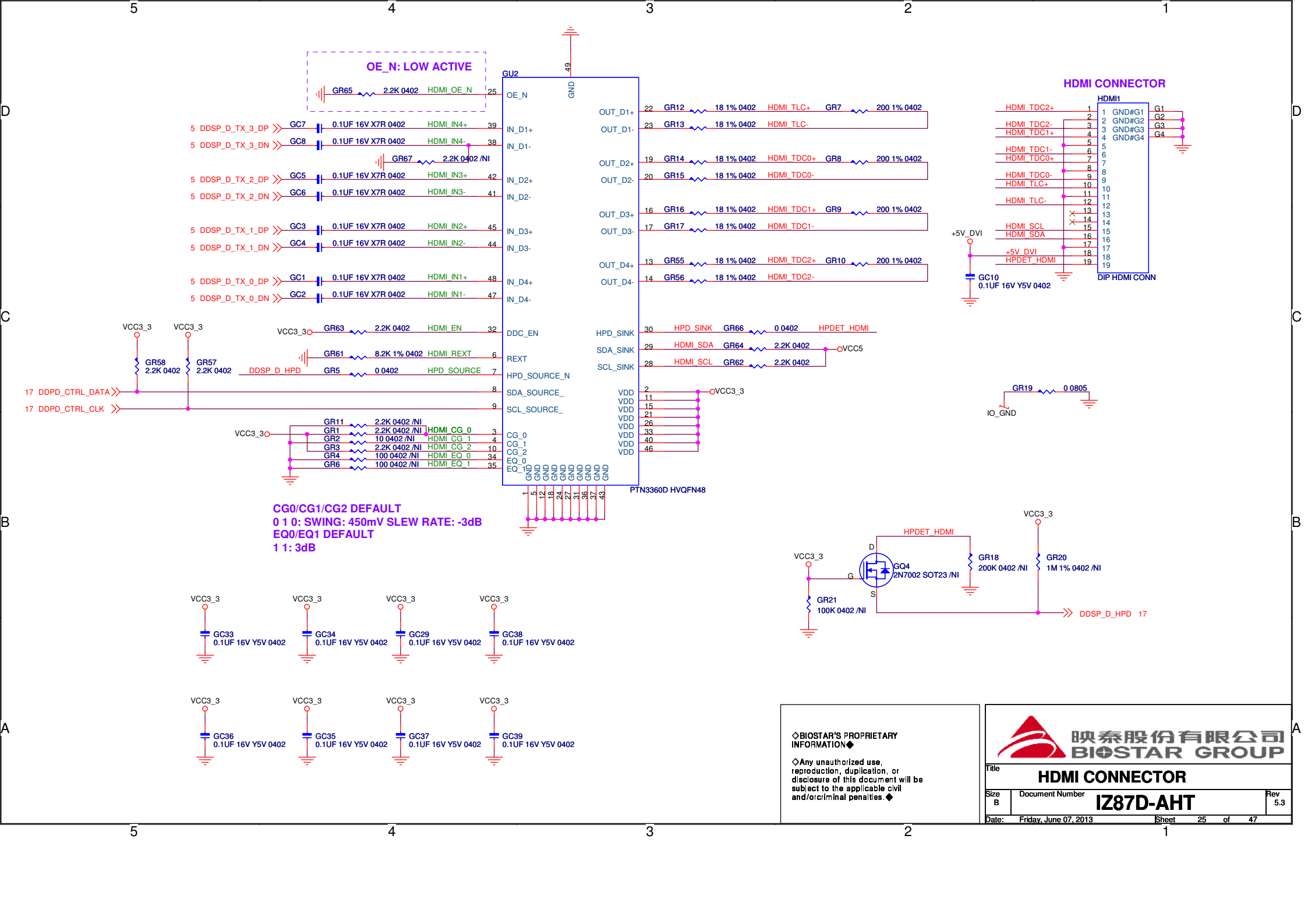

◇BIOSTAR'S PROPRIETARY INFORMATION◆

◇Any unauthorized use, reproduction, duplication, or disclosure of this document will be subject to the applicable civil and/orcriminal penalties.◆

映泰股份有限公司 BIOSTAR GROUP

Title: HDMI CONNECTOR

Size	Document Number	Rev
B	IZ87D-AHT	5.3

Date: Friday, June 07, 2013 Sheet 25 of 47

0.51 MODIFY

PLACEMENT: NEAR R/G/B SOURCE

17 VGA_RED
17 VGA_GREEN
17 VGA_BLUE

GR53 150 1% 0402
GR54 150 1% 0402
GR52 150 1% 0402

TRACE W/S:7.5/5 MIL

FB5 BEAD 60 0603
FB6 BEAD 60 0603
FB4 BEAD 60 0603

VGA_RED_D
VGA_GREEN_D
VGA_BLUE_D

FB3 BEAD 60 0603
FB2 BEAD 60 0603
FB1 BEAD 60 0603

C_VGA_RED
C_VGA_GREEN
C_VGA_BLUE

GC31 10P 50V NPO 0402
GC32 10P 50V NPO 0402
GC30 10P 50V NPO 0402

GR37 150 1% 0402
GR36 150 1% 0402
GR35 150 1% 0402

GC22 22P 50V NPO 0402
GC23 22P 50V NPO 0402
GC24 22P 50V NPO 0402

TRACE W/S:4/25 MIL (4/30 BETTER)

VCC5
GF1 POLY FUSE 1.1A
+5V_DVI
GC11 10UF 10V 0805 Y5V
GC20 0.1UF 16V Y5V 0402

17 HSYNC_C
17 VSYNC_C

VGA_DVI1A
VGA15P_DVI29P
C_VGA_RED
C_VGA_GREEN
VGA_5VDDA
C_VGA_BLUE
HSYNC_C
+5V_DVI
VSYNC_C
VGA_5VDDCLK

GR51 0 0805
IO_GND

VCC3_3
GR40 2.2K 0402
GR39 2.2K 0402
17 VGA_PCH_DDCSDA
GQ6 2N7002 SOT23
GR38 100 0402
VGA_5VDDA
GC25 10P 50V NPO 0402

GR42 2.2K 0402
GR41 2.2K 0402
17 VGA_PCH_DDCSCL
GQ7 2N7002 SOT23
GR43 100 0402
VGA_5VDDCLK
GC28 10P 50V NPO 0402

D_SUB

5 DDSP_B_TX_0_DP
5 DDSP_B_TX_0_DN
5 DDSP_B_TX_1_DP
5 DDSP_B_TX_1_DN
5 DDSP_B_TX_2_DP
5 DDSP_B_TX_2_DN
5 DDSP_B_TX_3_DP
5 DDSP_B_TX_3_DN

GC17 0.1UF 16V X7R 0402
GC16 0.1UF 16V X7R 0402
GC15 0.1UF 16V X7R 0402
GC14 0.1UF 16V X7R 0402
GC13 0.1UF 16V X7R 0402
GC12 0.1UF 16V X7R 0402
GC18 0.1UF 16V X7R 0402
GC19 0.1UF 16V X7R 0402

DVI_TDC2+ GR29 200 1% 0402
DVI_TDC2-
DVI_TDC1+ GR26 200 1% 0402
DVI_TDC1-
DVI_TDC0+ GR23 200 1% 0402
DVI_TDC0-
DVI_TLC+ GR32 200 1% 0402
DVI_TLC-

GR31 470 1% 0402
GR30 470 1% 0402
GR28 470 1% 0402
GR27 470 1% 0402
GR25 470 1% 0402
GR24 470 1% 0402
GR33 470 1% 0402
GR34 470 1% 0402

GQ5 2N7002 SOT23
VCC3_3 GR22 2.2K 0402

DVI CONNECTOR
DVI CONNECTOR TYPE ACCORD WITH SPEC

VGA_DVI1B
VGA15P_DVI29P
DVI_TDC0-
DVI_TDC0+
DVI_TLC+
DVI_TLC-
DVI_TDC2-
DVI_TDC1-
DVI_TDC2+
DVI_TDC1+
DVI_SCL
+5V_DVI
DVI_SDA
HPDET_DVI

LEVEL SHIFTER
HPD +5V SWITCH TO +3.3V

VCC3_3
HPDET_DVI
GQ10 2N7002 SOT23
GR49 200K 0402
GR50 1M 1% 0402
GR47 100K 0402 /NI
DDSP_B_HPD 17

17 DDPB_CTRL_DATA
GR45 2.2K 0402
GR48 2.2K 0402
DVI_SDA
GQ9 2N7002 SOT23

17 DDPB_CTRL_CLK
GR44 2.2K 0402
GR46 2.2K 0402
DVI_SCL
GQ8 2N7002 SOT23

VCC3_3
VCC5
GC9 0.1UF 16V Y5V 0402
GC21 0.1UF 16V Y5V 0402

DVI

◇BIOSTAR'S PROPRIETARY INFORMATION◆

◇Any unauthorized use, reproduction, duplication, or disclosure of this document will be subject to the applicable civil and/orcriminal penalties.◆

映泰股份有限公司
BIOSTAR GROUP

Title: VGA/DVI CONNECTOR

Size: Custom | Document Number: IZ87D-AHT | Rev: 5.3

Date: Friday, June 07, 2013 | Sheet 26 of 47

AUDIO PART: A+Reference

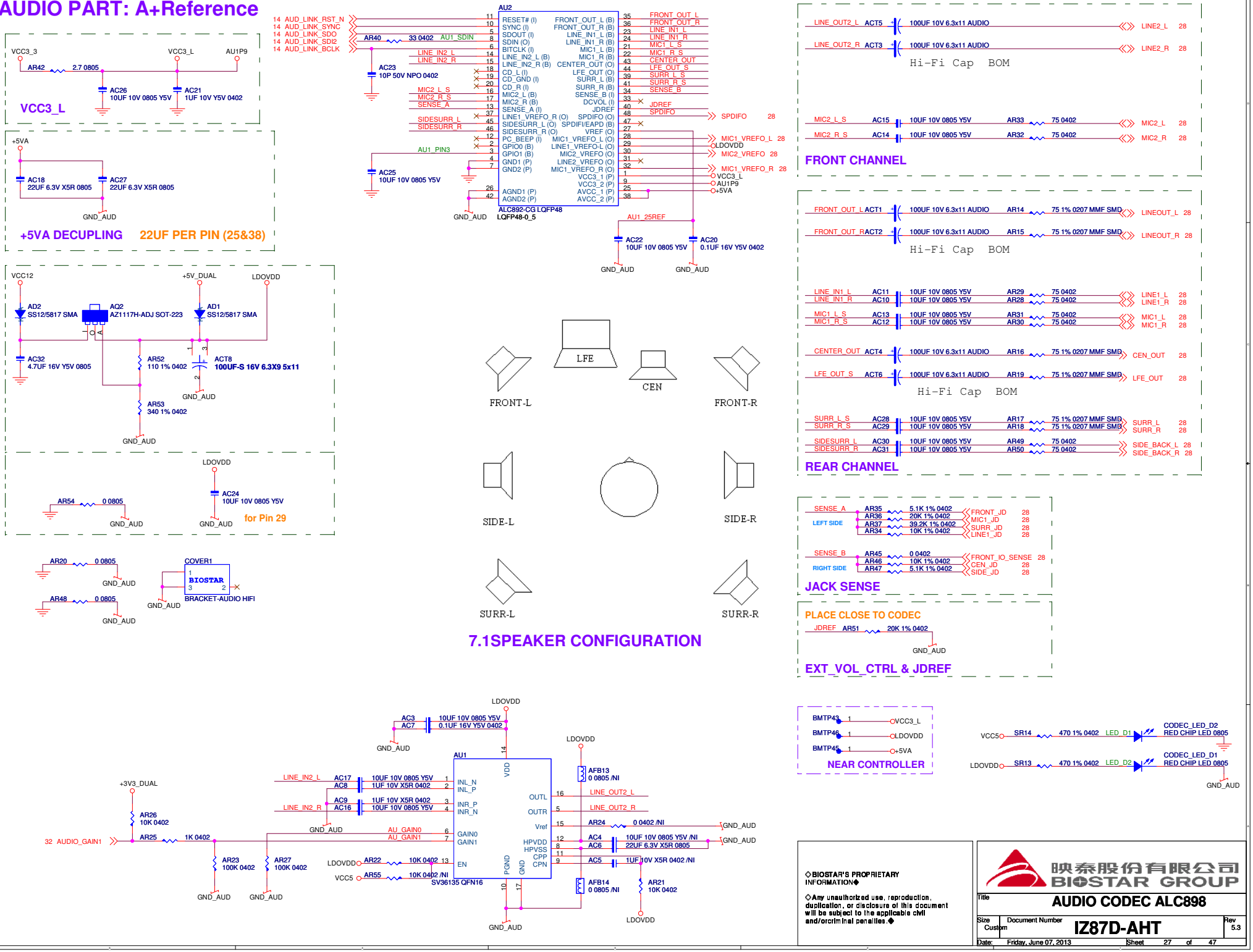

◇BIOSTAR'S PROPRIETARY INFORMATION◆

◇Any unauthorized use, reproduction, duplication, or disclosure of this document will be subject to the applicable civil and/orcrimInal penalties.◆

Size: Custom	Document Number: IZ87D-AHT		Rev: 5.3
Date: Friday, June 07, 2013	Sheet 27 of 47		

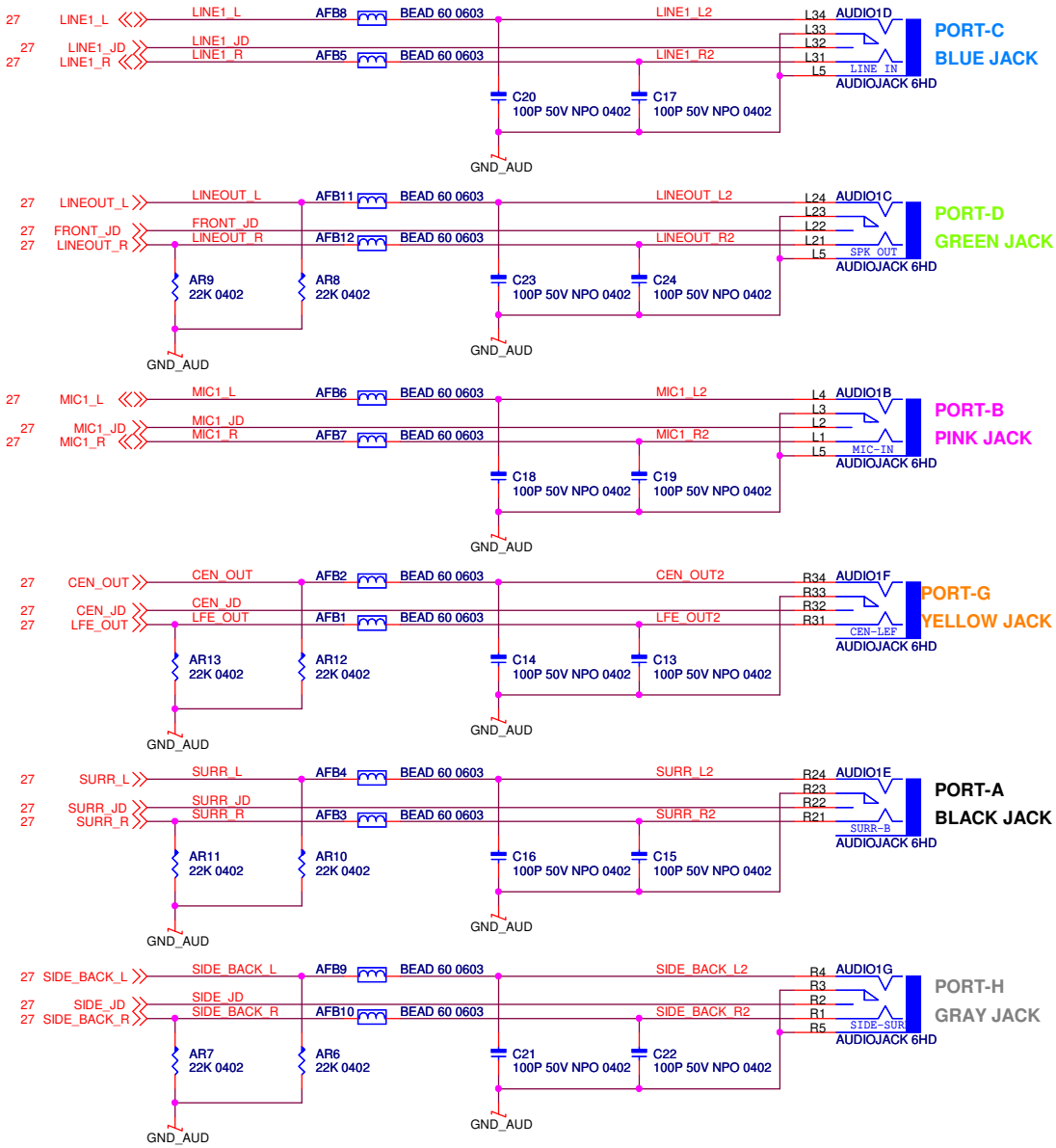

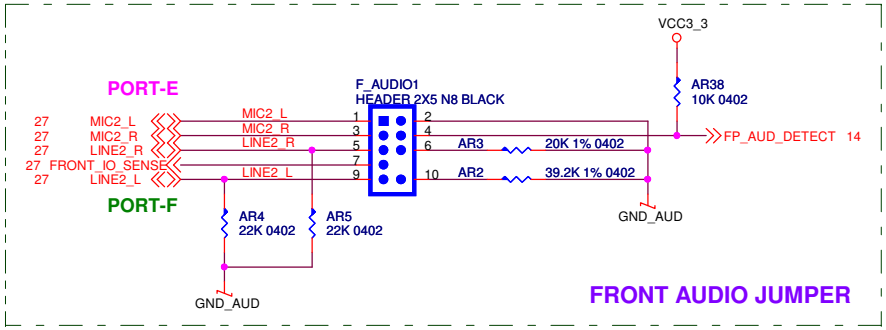

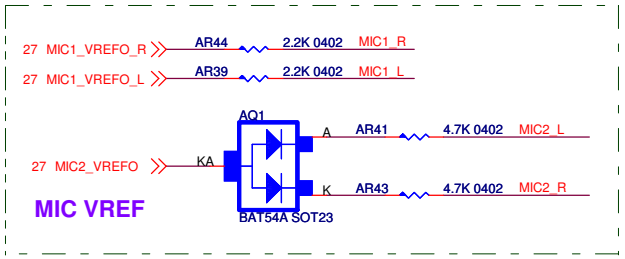

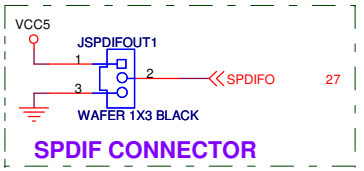

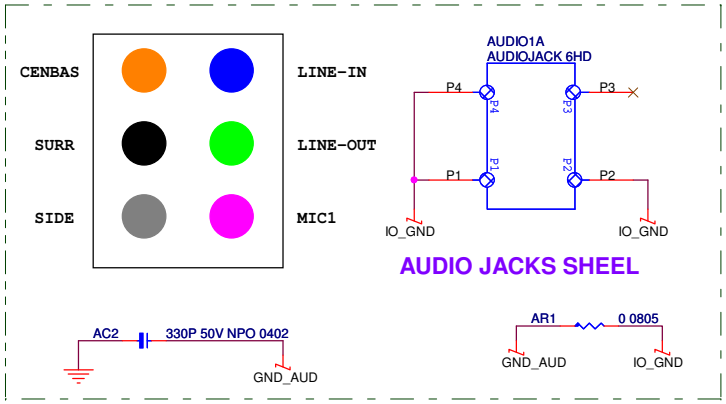

◇BIOSTAR'S PROPRIETARY INFORMATION◆

◇Any unauthorized use, reproduction, duplication, or disclosure of this document will be subject to the applicable civil and/orcriminal penalties.◆

映泰股份有限公司
BIOSTAR GROUP

Title: AUDIO CONNECTOR

Size	Document Number	Rev
B	IZ87D-AHT	5.3

Date: Friday, June 07, 2013 Sheet 28 of 47

LAN PART: L+Reference

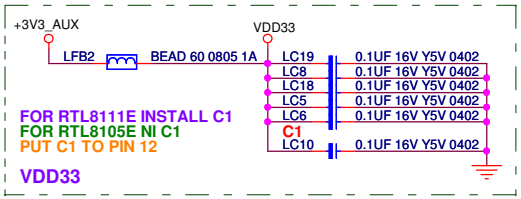

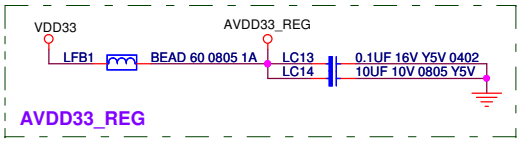

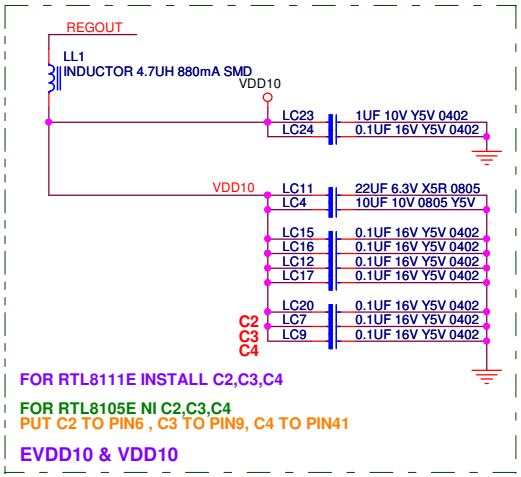

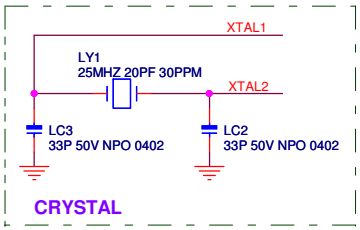

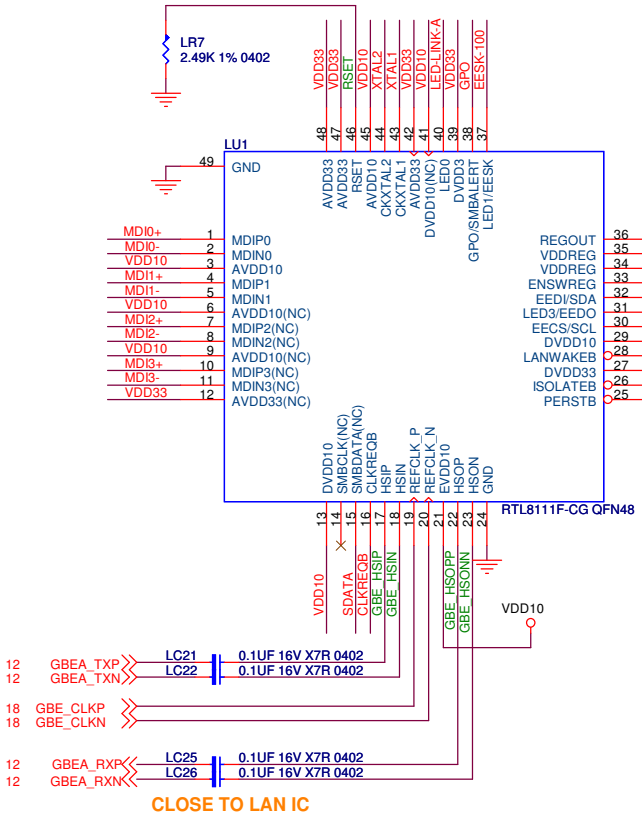

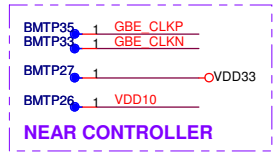

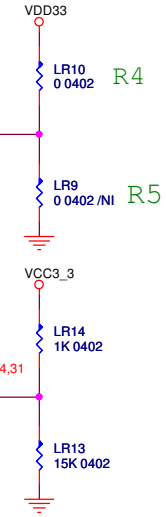

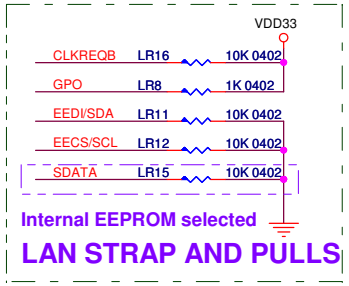

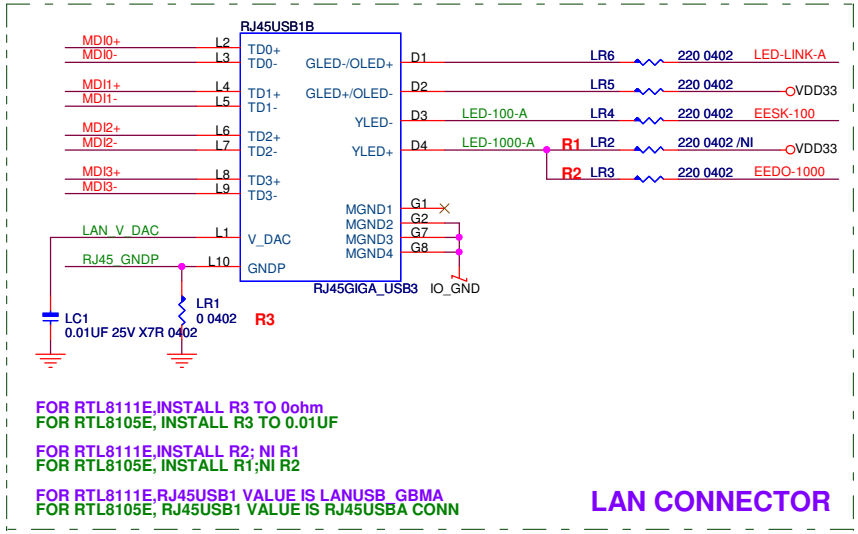

COMPONENT CONTRAST LIST

LAN PARTS	C1	C2	C3	C4		R1	R2	R3	RJ45 CONN
RTL8111E	O	O	O	O		X	O	0ohm	LANUSB_GBMA
RTL8105E	X	X	X	X		O	X	0.01uF	RJ45USBA CONN

◇BIOSTAR'S PROPRIETARY INFORMATION◆

◇Any unauthorized use, reproduction, duplication, or disclosure of this document will be subject to the applicable civil and/orcriminal penalties.◆

映泰股份有限公司 BIOSTAR GROUP

Title: ALC 8111F/8105E

Size: B | Document Number: IZ87D-AHT | Rev: 5.3

Date: Friday, June 07, 2013 | Sheet 29 of 47

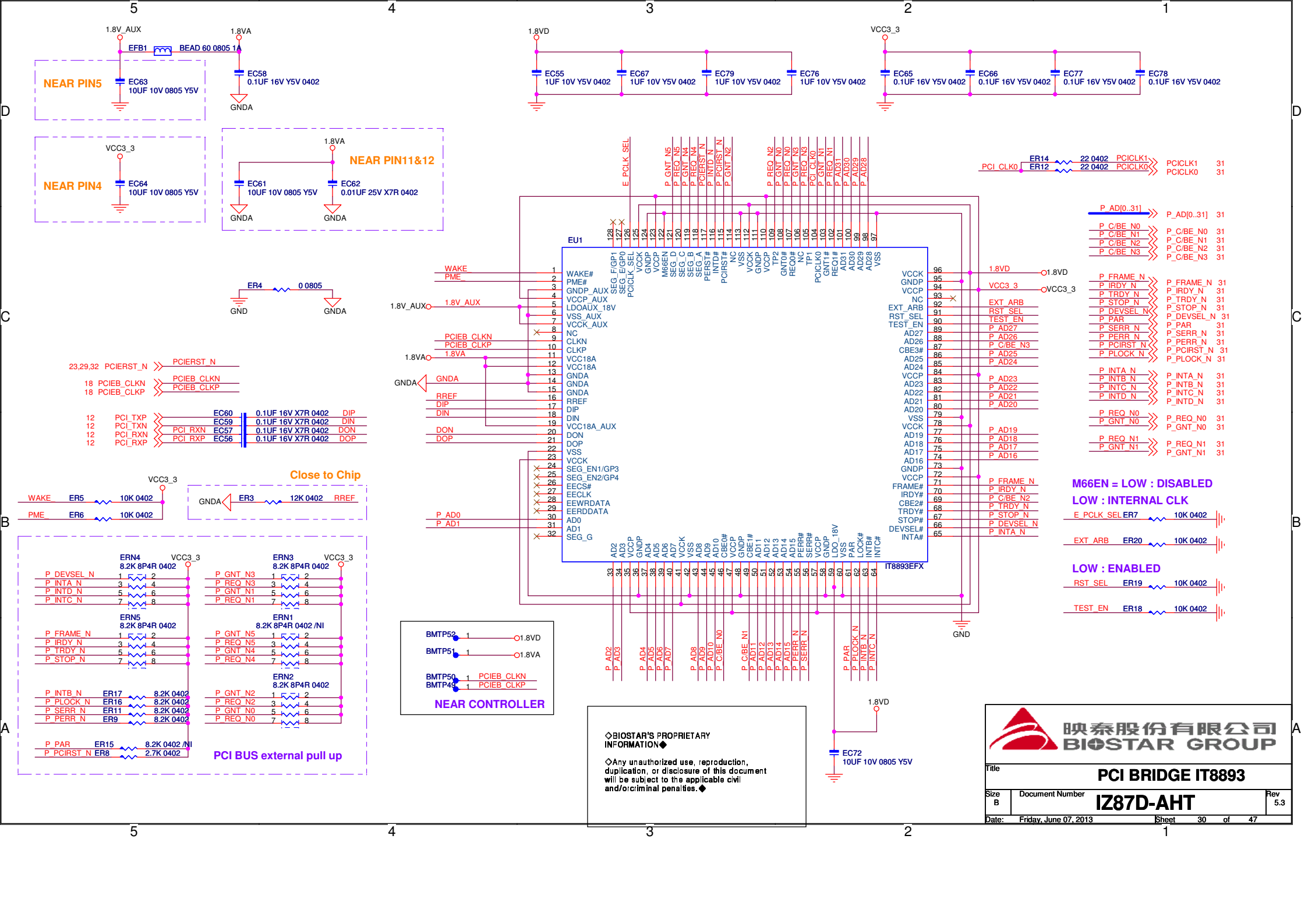
1.8V_AUX
EFB1
BEAD 60 0805 1A
1.8VA
NEAR PIN5
EC63
10UF 10V 0805 Y5V
EC58
0.1UF 16V Y5V 0402
GNDA
1.8VD
EC55
1UF 10V Y5V 0402
EC67
1UF 10V Y5V 0402
EC79
1UF 10V Y5V 0402
EC76
1UF 10V Y5V 0402
VCC3_3
EC65
0.1UF 16V Y5V 0402
EC66
0.1UF 16V Y5V 0402
EC77
0.1UF 16V Y5V 0402
EC78
0.1UF 16V Y5V 0402
NEAR PIN4
EC64
10UF 10V 0805 Y5V
NEAR PIN11&12
EC61
10UF 10V 0805 Y5V
EC62
0.01UF 25V X7R 0402
ER4
0 0805
GND
EU1
WAKE#
PME#
GNDP_AUX
VCCP_AUX
LDOAUX_18V
VSS_AUX
VCCK_AUX
NC
CLKN
CLKP
VCC18A
VCC18A
GNDA
GNDA
GNDA
RREF
DIP
DIN
VCC18A_AUX
DON
DOP
VSS
VCCK
SEG_EN1/GP3
SEG_EN2/GP4
EECS#
EECLK
EEWRDATA
EERDDATA
AD0
AD1
SEG_G
IT8893EFX
E_PCLK_SEL
P_GNT_N5
P_REQ_N5
P_GNT_N4
P_REQ_N4
P_PCIRST_N
P_INTD_N
P_PCIRST#
P_GNT_N2
P_REQ_N2
P_GNT_N0
P_REQ_N0
P_GNT_N3
P_REQ_N3
P_GNT_N1
P_REQ_N1
P_AD31
P_AD30
P_AD29
P_AD28
PCI_CLK0
ER14
22 0402
PCICLK1
ER12
22 0402
PCICLK0
P_AD[0..31]
P_C/BE_N0
P_C/BE_N1
P_C/BE_N2
P_C/BE_N3
P_FRAME_N
P_IRDY_N
P_TRDY_N
P_STOP_N
P_DEVSEL_N
P_PAR
P_SERR_N
P_PERR_N
P_PCIRST_N
P_PLOCK_N
P_INTA_N
P_INTB_N
P_INTC_N
P_INTD_N
P_REQ_N0
P_GNT_N0
P_REQ_N1
P_GNT_N1
WAKE
PME
1.8V_AUX
PCIEB_CLKN
PCIEB_CLKP
1.8VA
GNDA
RREF
DIP
DIN
DON
DOP
P_AD0
P_AD1
1.8VD
VCC3_3
EXT_ARB
RST_SEL
TEST_EN
P_AD27
P_AD26
P_C/BE_N3
P_AD25
P_AD24
P_AD23
P_AD22
P_AD21
P_AD20
P_AD19
P_AD18
P_AD17
P_AD16
P_FRAME_N
P_IRDY_N
P_C/BE_N2
P_TRDY_N
P_STOP_N
P_DEVSEL_N
P_INTA_N
GND
23,29,32 PCIERST_N
PCIERST_N
18 PCIEB_CLKN
18 PCIEB_CLKP
12 PCI_TXP
12 PCI_TXN
12 PCI_RXN
12 PCI_RXP
EC60
0.1UF 16V X7R 0402
DIP
EC59
0.1UF 16V X7R 0402
DIN
PCI_RXN
EC57
0.1UF 16V X7R 0402
DON
PCI_RXP
EC56
0.1UF 16V X7R 0402
DOP
Close to Chip
WAKE
ER5
10K 0402
PME
ER6
10K 0402
GNDA
ER3
12K 0402
RREF
ERN4
8.2K 8P4R 0402
P_DEVSEL_N
P_INTA_N
P_INTD_N
P_INTC_N
ERN3
8.2K 8P4R 0402
P_GNT_N3
P_REQ_N3
P_GNT_N1
P_REQ_N1
ERN5
8.2K 8P4R 0402
P_FRAME_N
P_IRDY_N
P_TRDY_N
P_STOP_N
ERN1
8.2K 8P4R 0402 /NI
P_GNT_N5
P_REQ_N5
P_GNT_N4
P_REQ_N4
ERN2
8.2K 8P4R 0402
P_GNT_N2
P_REQ_N2
P_GNT_N0
P_REQ_N0
P_INTB_N
ER17
8.2K 0402
P_PLOCK_N
ER16
8.2K 0402
P_SERR_N
ER11
8.2K 0402
P_PERR_N
ER9
8.2K 0402
P_PAR
ER15
8.2K 0402 /NI
P_PCIRST_N
ER8
2.7K 0402
PCI BUS external pull up
BMTP52
BMTP51
BMTP50
BMTP49
PCIEB_CLKN
PCIEB_CLKP
NEAR CONTROLLER
M66EN = LOW : DISABLED
LOW : INTERNAL CLK
E_PCLK_SEL
ER7
10K 0402
EXT_ARB
ER20
10K 0402
LOW : ENABLED
RST_SEL
ER19
10K 0402
TEST_EN
ER18
10K 0402
EC72
10UF 10V 0805 Y5V
◇BIOSTAR'S PROPRIETARY INFORMATION◆
◇Any unauthorized use, reproduction, duplication, or disclosure of this document will be subject to the applicable civil and/orcriminal penalties.◆
映泰股份有限公司
BIOSTAR GROUP
Title
PCI BRIDGE IT8893
Size
B
Document Number
IZ87D-AHT
Rev
5.3
Date:
Friday, June 07, 2013
Sheet
30
of
47

BMTPS4 1 PCICLK0

BMTPS3 1 P_PCIRST_N

NEAR SLOT

IDSEL:AD16 , INT:ABCD , REQ0 & GNT0 , PCICLK0

IDSEL:AD17 , INT:BCDA , REQ1 & GNT1 , PCICLK0

PCI_SLOT 1

PCI_SLOT 2

PCI1

PCI2

PCI-120 PIN-B

P_C/BE_N0 P_C/BE_N1 P_C/BE_N2 P_C/BE_N3 P_AD[0..31]

RN1 4.7K 8P4R 0402

ACK64_N REQ64B_N ACK64_N1 REQ64B_N1

ER10 22 0402 P_AD16

ER13 22 0402 P_AD17

EMI EC73 0.1UF 16V Y5V 0402

ECT4 560UF-S 6.3V 6.3X9 8X12

NERA PCI1

NERA PCI2

EC81 EC70 EC75 EC68 EC69 EC74 EC80 EC71 0.1UF 16V Y5V 0402

◇BIOSTAR'S PROPRIETARY INFORMATION◆

◇Any unauthorized use, reproduction, duplication, or disclosure of this document will be subject to the applicable civil and/orcriminal penalties.◆

映泰股份有限公司 BIOSTAR GROUP

Title: VCCIO DC-DC Conver

Size: Custom | Document Number: IZ87D-AHT | Rev: 5.3

Date: Friday, June 07, 2013 | Sheet 31 of 47

SUPERIO PART: S+Reference

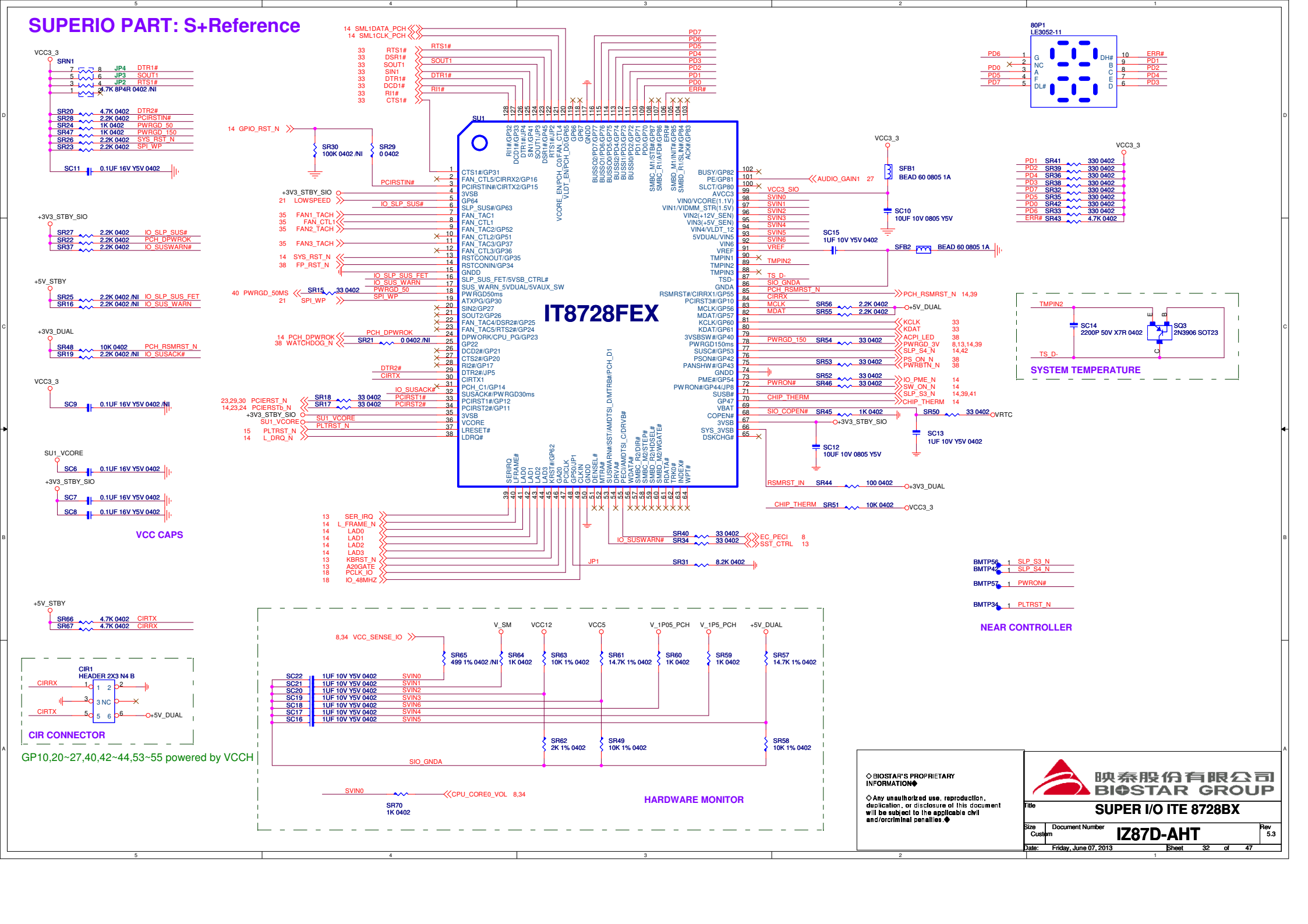

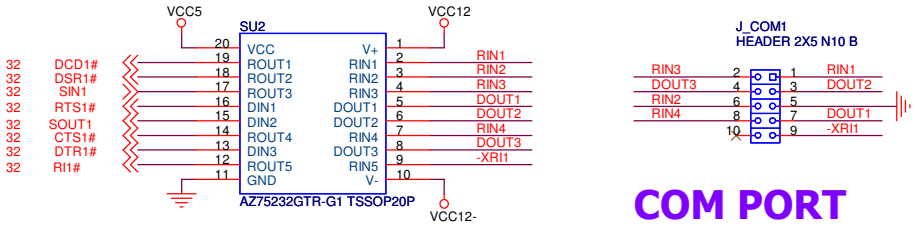

COM PORT

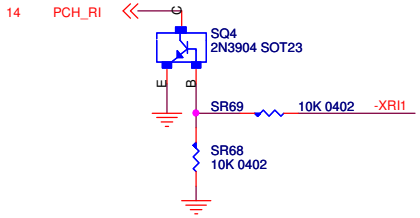

WAKE ON RING

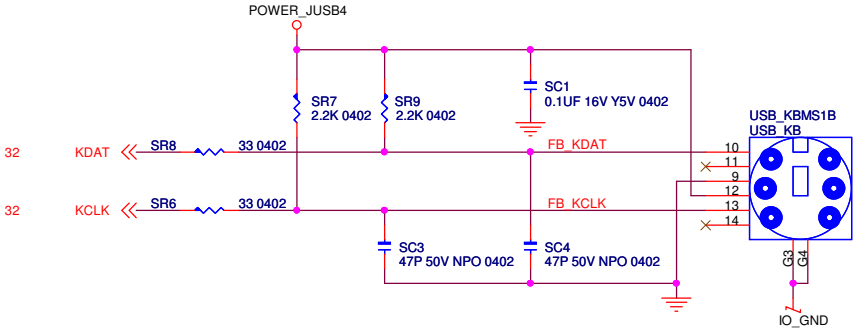

KEYBOARD & MOUSE

◇BIOSTAR'S PROPRIETARY INFORMATION◆

◇Any unauthorized use, reproduction, duplication, or disclosure of this document will be subject to the applicable civil and/orcriminal penalties.◆

映泰股份有限公司
BIOSTAR GROUP

Title	COM1 / PS2 CONN	
Size B	Document Number IZ87D-AHT	Rev 5.3
Date: Friday, June 07, 2013	Sheet 33 of 47	

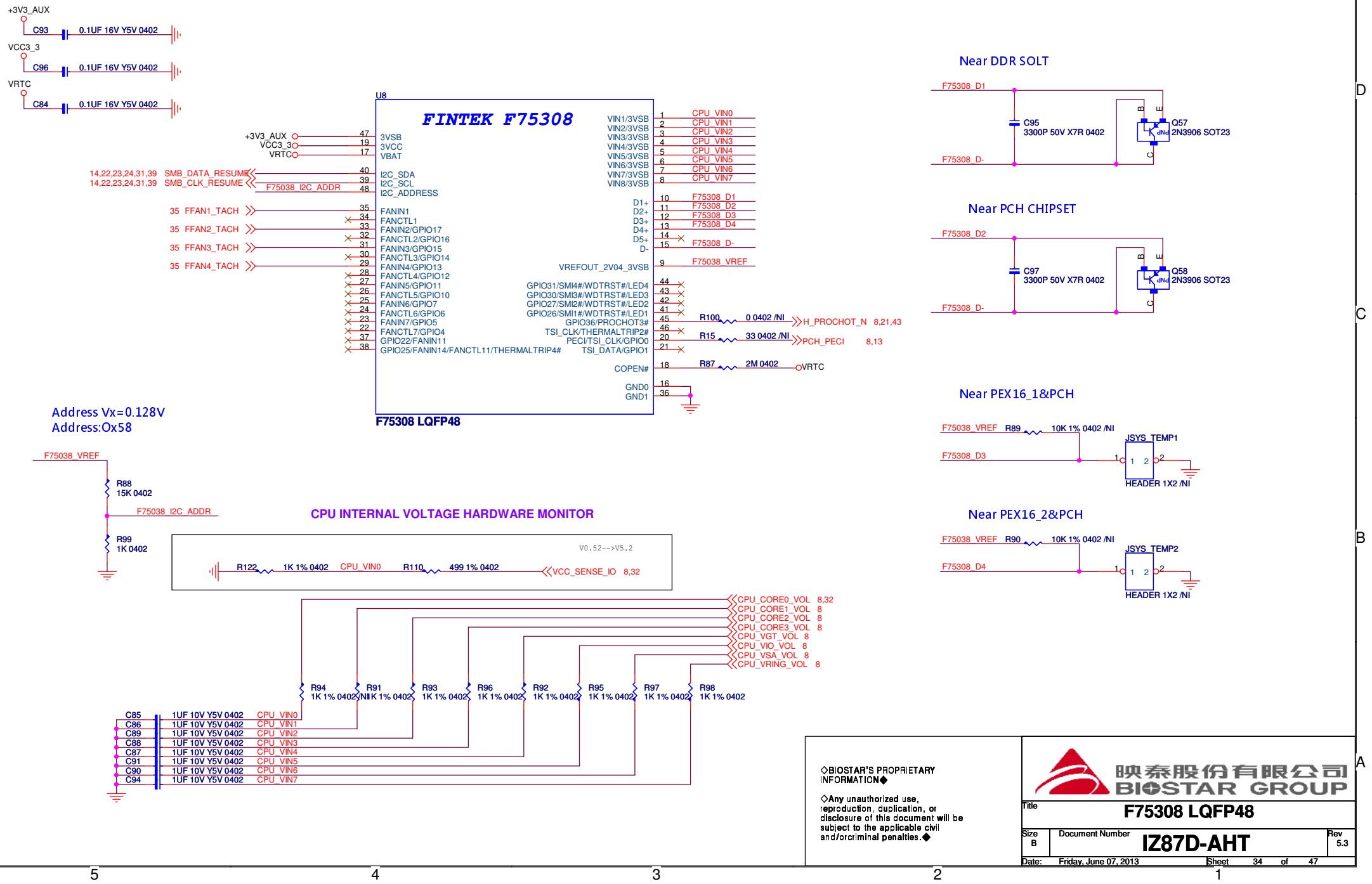
+3V3_AUX
C93 0.1UF 16V Y5V 0402
VCC3_3
C96 0.1UF 16V Y5V 0402
VRTC
C84 0.1UF 16V Y5V 0402
U8
FINTEK F75308
+3V3_AUX
VCC3_3
VRTC
3VSB
3VCC
VBAT
14,22,23,24,31,39 SMB_DATA_RESUME
14,22,23,24,31,39 SMB_CLK_RESUME
F75038_I2C_ADDR
I2C_SDA
I2C_SCL
I2C_ADDRESS
35 FFAN1_TACH
35 FFAN2_TACH
35 FFAN3_TACH
35 FFAN4_TACH
FANIN1
FANCTL1
FANIN2/GPIO17
FANCTL2/GPIO16
FANIN3/GPIO15
FANCTL3/GPIO14
FANIN4/GPIO13
FANCTL4/GPIO12
FANIN5/GPIO11
FANCTL5/GPIO10
FANIN6/GPIO7
FANCTL6/GPIO6
FANIN7/GPIO5
FANCTL7/GPIO4
GPIO22/FANIN11
GPIO25/FANIN14/FANCTL11/THERMALTRIP4#
VIN1/3VSB CPU_VIN0
VIN2/3VSB CPU_VIN1
VIN3/3VSB CPU_VIN2
VIN4/3VSB CPU_VIN3
VIN5/3VSB CPU_VIN4
VIN6/3VSB CPU_VIN5
VIN7/3VSB CPU_VIN6
VIN8/3VSB CPU_VIN7
D1+ F75308_D1
D2+ F75308_D2
D3+ F75308_D3
D4+ F75308_D4
D5+
D- F75308_D-
VREFOUT_2V04_3VSB F75308_VREF
GPIO31/SMI4#/WDTRST#/LED4
GPIO30/SMI3#/WDTRST#/LED3
GPIO27/SMI2#/WDTRST#/LED2
GPIO26/SMI1#/WDTRST#/LED1
GPIO36/PROCHOT3# R100 0 0402 /NI H_PROCHOT_N 8,21,43
TSI_CLK/THERMALTRIP2#
PECI/TSI_CLK/GPIO0 R15 33 0402 /NI PCH_PECI 8,13
TSI_DATA/GPIO1
COPEN# R87 2M 0402 VRTC
GND0
GND1
F75308 LQFP48
Near DDR SOLT
F75308_D1
C95 3300P 50V X7R 0402
F75308_D-
Q57 2N3906 SOT23
Near PCH CHIPSET
F75308_D2
C97 3300P 50V X7R 0402
F75308_D-
Q58 2N3906 SOT23
Address Vx=0.128V
Address:Ox58
F75038_VREF
R88 15K 0402
F75038_I2C_ADDR
R99 1K 0402
CPU INTERNAL VOLTAGE HARDWARE MONITOR
V0.52-->V5.2
R122 1K 1% 0402 CPU_VIN0
R110 499 1% 0402 VCC_SENSE_IO 8,32
CPU_CORE0_VOL 8,32
CPU_CORE1_VOL 8
CPU_CORE2_VOL 8
CPU_CORE3_VOL 8
CPU_VGT_VOL 8
CPU_VIO_VOL 8
CPU_VSA_VOL 8
CPU_VRING_VOL 8
R94 1K 1% 0402
R91 1K 1% 0402
R93 1K 1% 0402
R96 1K 1% 0402
R92 1K 1% 0402
R95 1K 1% 0402
R97 1K 1% 0402
R98 1K 1% 0402
C85 1UF 10V Y5V 0402 CPU_VIN0
C86 1UF 10V Y5V 0402 CPU_VIN1
C89 1UF 10V Y5V 0402 CPU_VIN2
C88 1UF 10V Y5V 0402 CPU_VIN3
C87 1UF 10V Y5V 0402 CPU_VIN4
C91 1UF 10V Y5V 0402 CPU_VIN5
C90 1UF 10V Y5V 0402 CPU_VIN6
C94 1UF 10V Y5V 0402 CPU_VIN7
Near PEX16_1&PCH
F75038_VREF R89 10K 1% 0402 /NI
F75308_D3
JSYS_TEMP1
HEADER 1X2 /NI
Near PEX16_2&PCH
F75038_VREF R90 10K 1% 0402 /NI
F75308_D4
JSYS_TEMP2
HEADER 1X2 /NI
◇BIOSTAR'S PROPRIETARY INFORMATION◆
◇Any unauthorized use, reproduction, duplication, or disclosure of this document will be subject to the applicable civil and/orcriminal penalties.◆
映泰股份有限公司
BIOSTAR GROUP
Title
F75308 LQFP48
Size B
Document Number
IZ87D-AHT
Rev 5.3
Date: Friday, June 07, 2013
Sheet 34 of 47

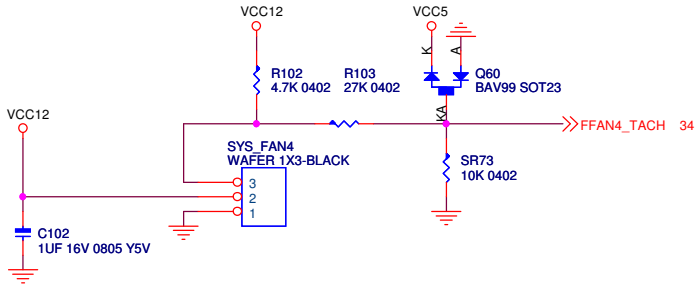

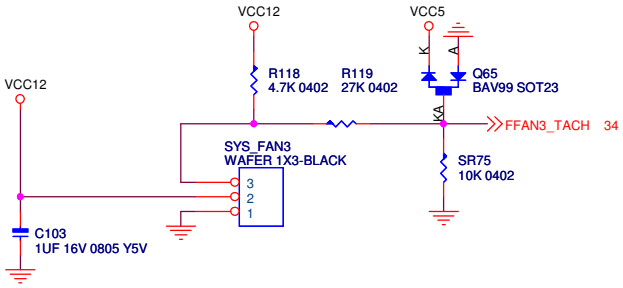

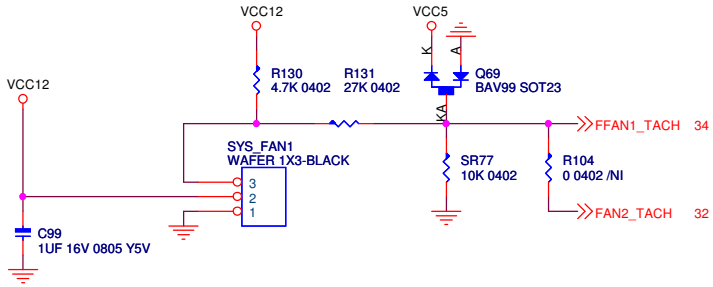

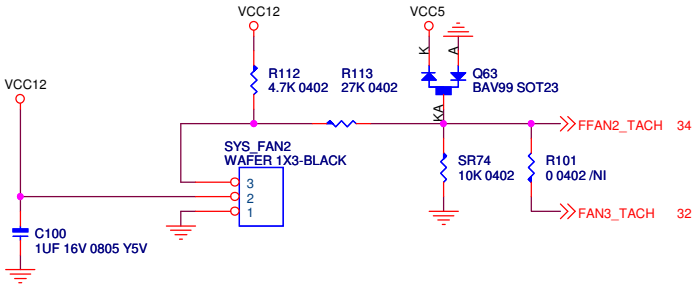

CPU FAN

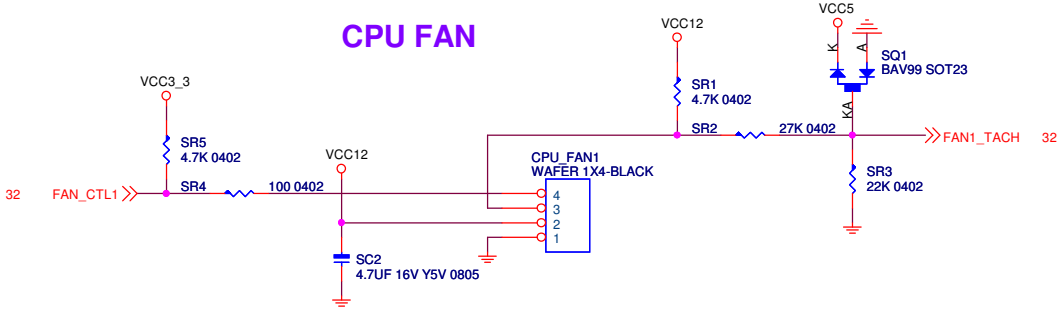

◇BIOSTAR'S PROPRIETARY INFORMATION◆

◇Any unauthorized use, reproduction, duplication, or disclosure of this document will be subject to the applicable civil and/orcriminal penalties.◆

映泰股份有限公司
BIOSTAR GROUP

Title: FAN CONTROL

Size: B | Document Number: IZ87D-AHT | Rev: 5.3

Date: Friday, June 07, 2013 | Sheet 35 of 47

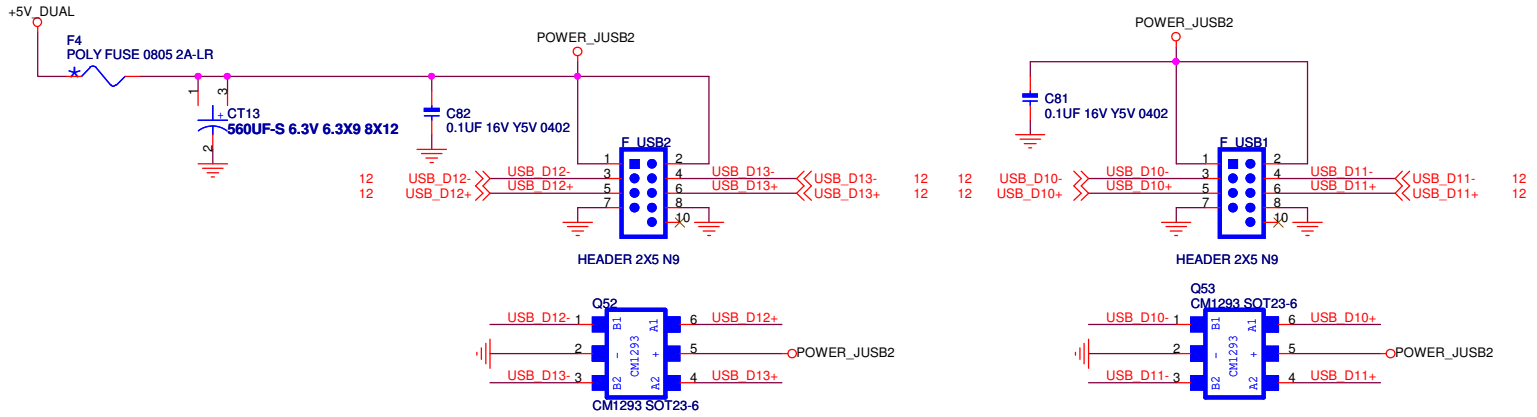

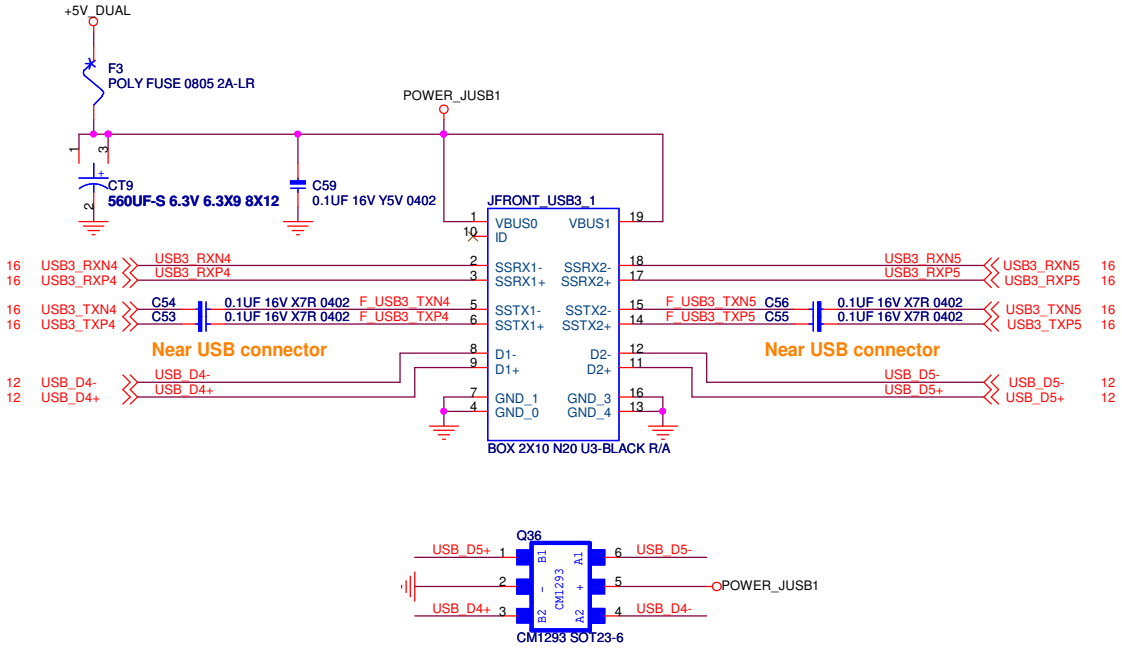

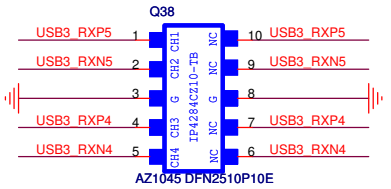

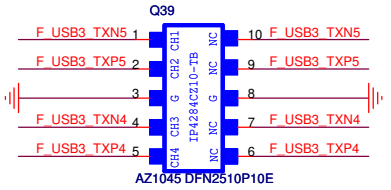

◇BIOSTAR'S PROPRIETARY INFORMATION◆

◇Any unauthorized use, reproduction, duplication, or disclosure of this document will be subject to the applicable civil and/orcriminal penalties.◆

映泰股份有限公司
BIOSTAR GROUP

Title	FRONT USB	
Size B	Document Number IZ87D-AHT	Rev 5.3
Date: Friday, June 07, 2013	Sheet 36 of 47	

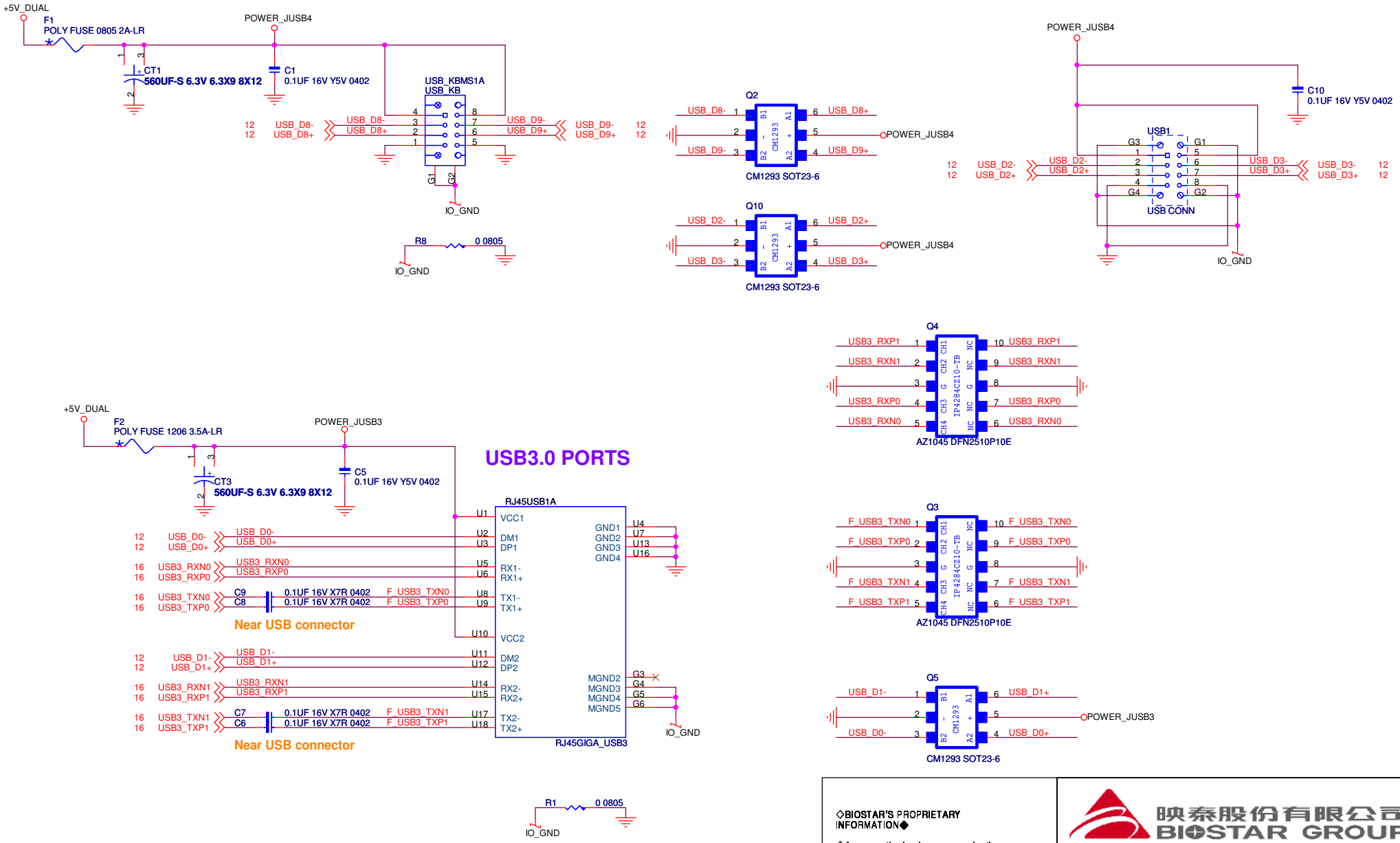

◇BIOSTAR'S PROPRIETARY INFORMATION◆

◇Any unauthorized use, reproduction, duplication, or disclosure of this document will be subject to the applicable civil and/orcriminal penalties.◆

映泰股份有限公司
BIOSTAR GROUP

Title	USB CONN	
Size B	Document Number IZ87D-AHT	Rev 5.3
Date: Friday, June 07, 2013	Sheet 37 of 47	

FP PART: F+Reference

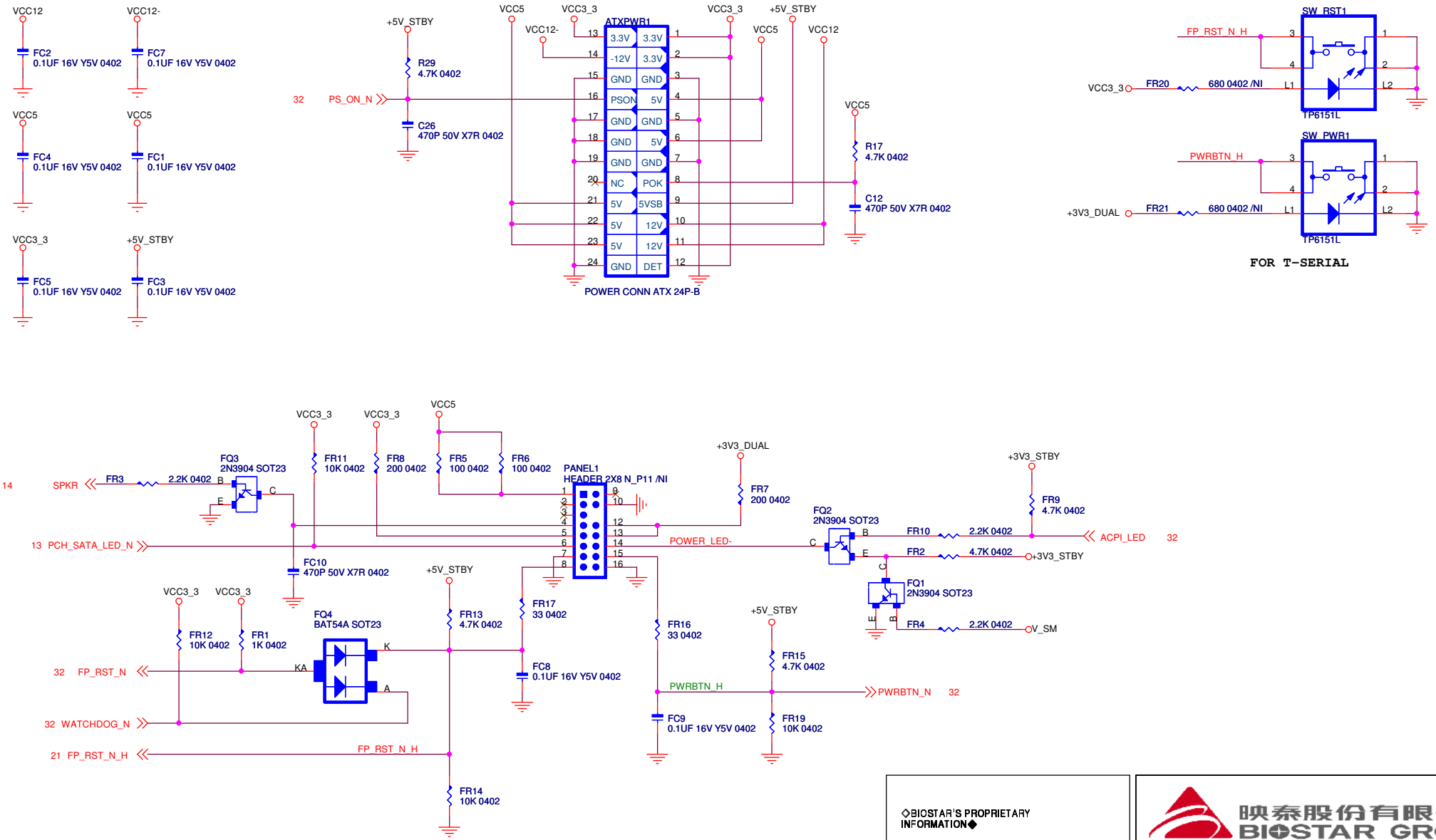

◇BIOSTAR'S PROPRIETARY INFORMATION◆

◇Any unauthorized use, reproduction, duplication, or disclosure of this document will be subject to the applicable civil and/orcriminal penalties.◆

映泰股份有限公司 BIOSTAR GROUP

Title	24PIN POWER CONN&FP	
Size B	Document Number IZ87D-AHT	Rev 5.3
Date: Friday, June 07, 2013	Sheet 38 of 47	

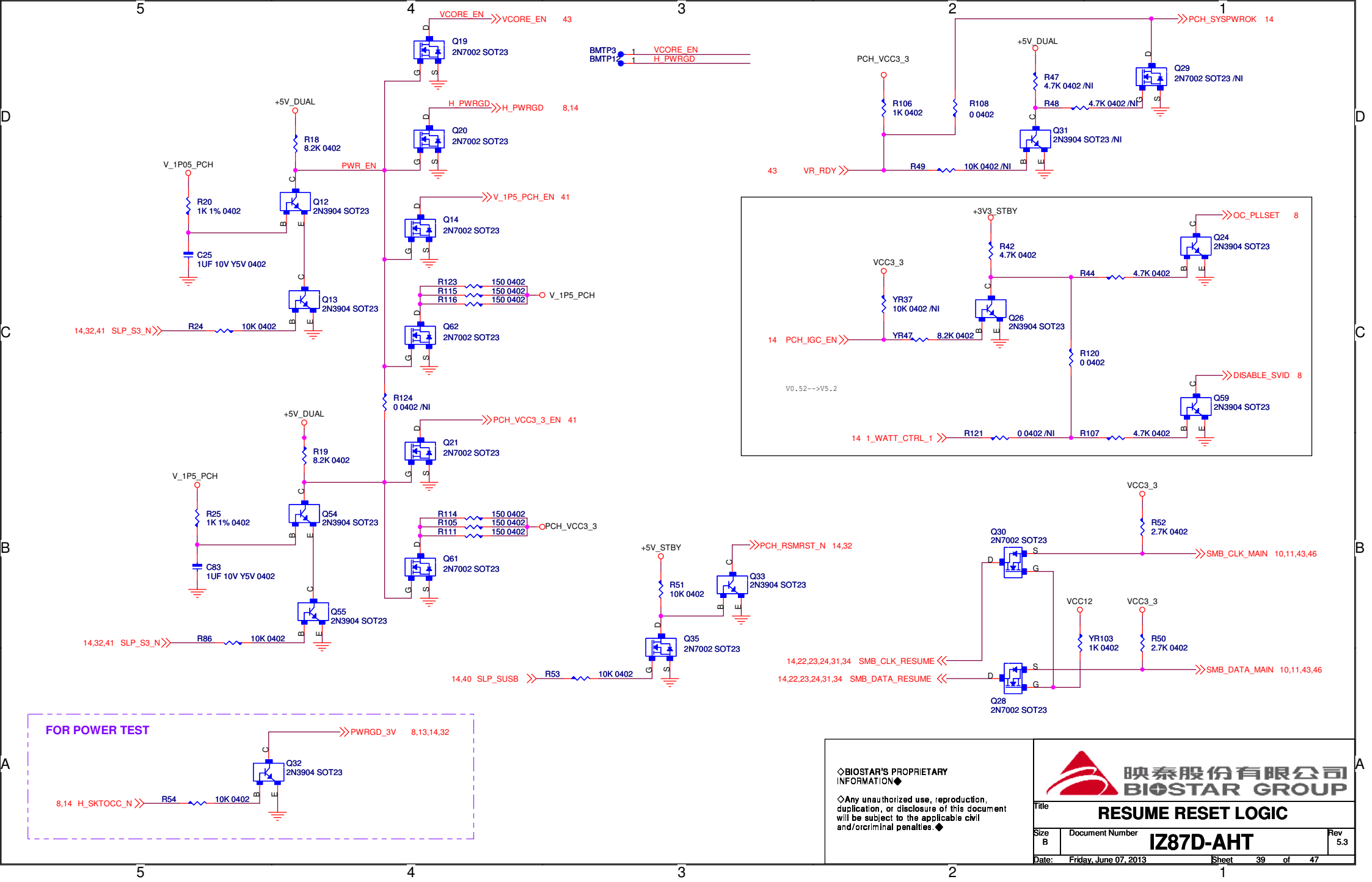

◇BIOSTAR'S PROPRIETARY INFORMATION◆

◇Any unauthorized use, reproduction, duplication, or disclosure of this document will be subject to the applicable civil and/orcriminal penalties.◆

映泰股份有限公司 BIOSTAR GROUP

Title: **RESUME RESET LOGIC**

Size	Document Number	Rev
B	IZ87D-AHT	5.3

Date: Friday, June 07, 2013 Sheet 39 of 47

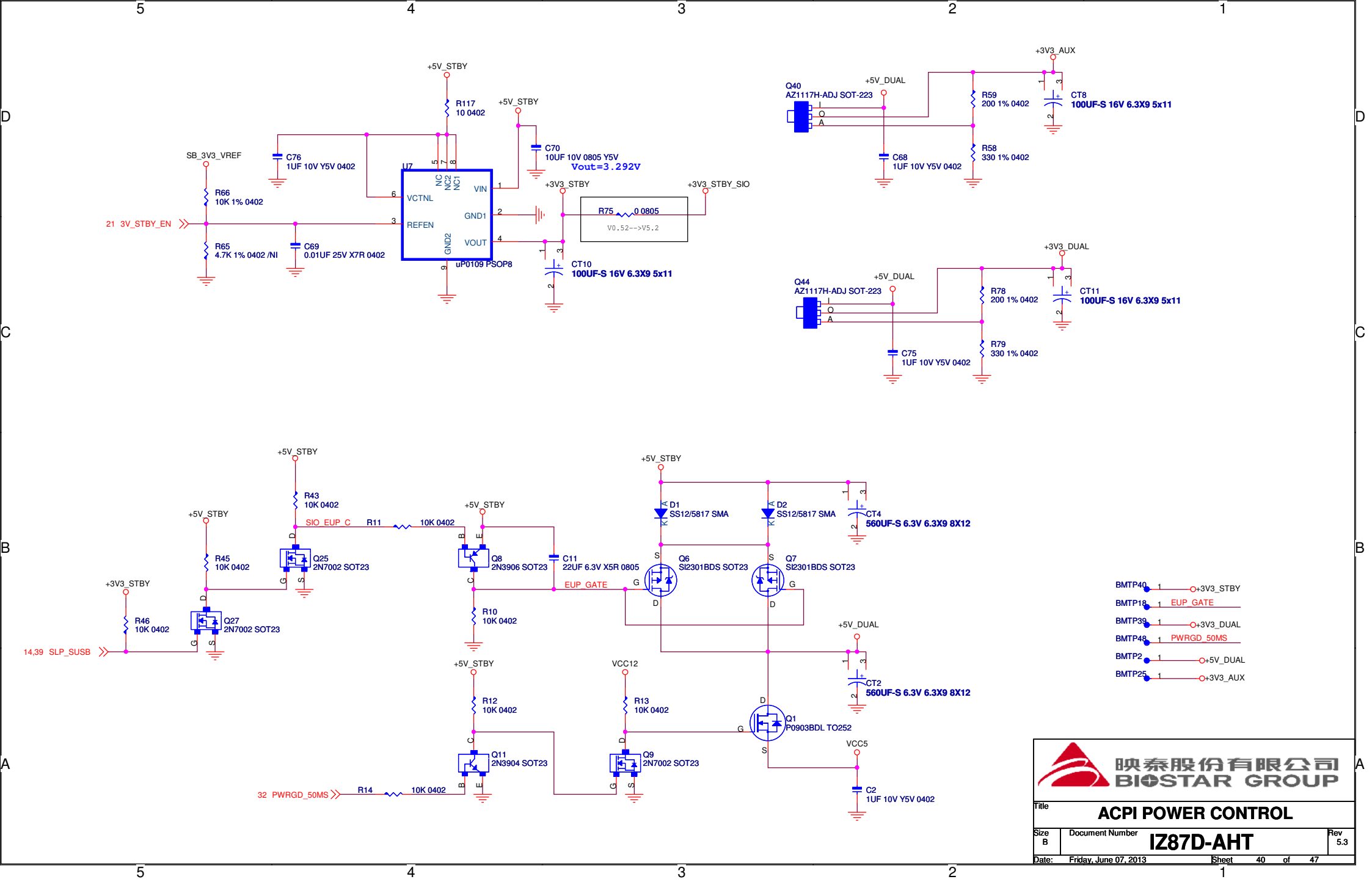

映泰股份有限公司
BIOSTAR GROUP

Title	ACPI POWER CONTROL	
Size B	Document Number IZ87D-AHT	Rev 5.3
Date: Friday, June 07, 2013	Sheet 40 of 47	

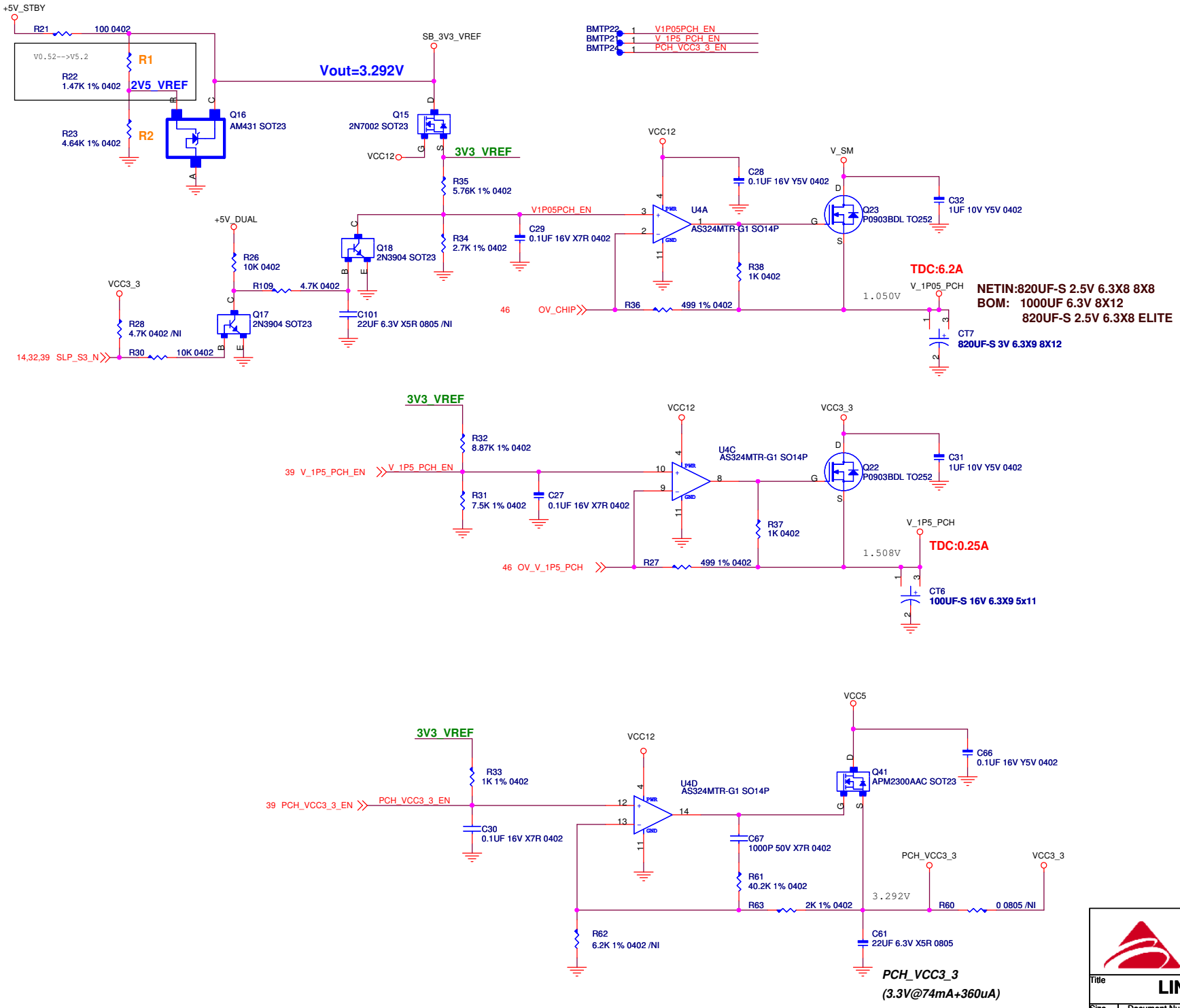

映泰股份有限公司
BIOSTAR GROUP

Title	LINEAR POWER CONTROL	
Size: Custom	Document Number: IZ87D-AHT	Rev: 5.3
Date: Friday, June 07, 2013	Sheet 41 of 47	

MEMORY PART:M+Reference

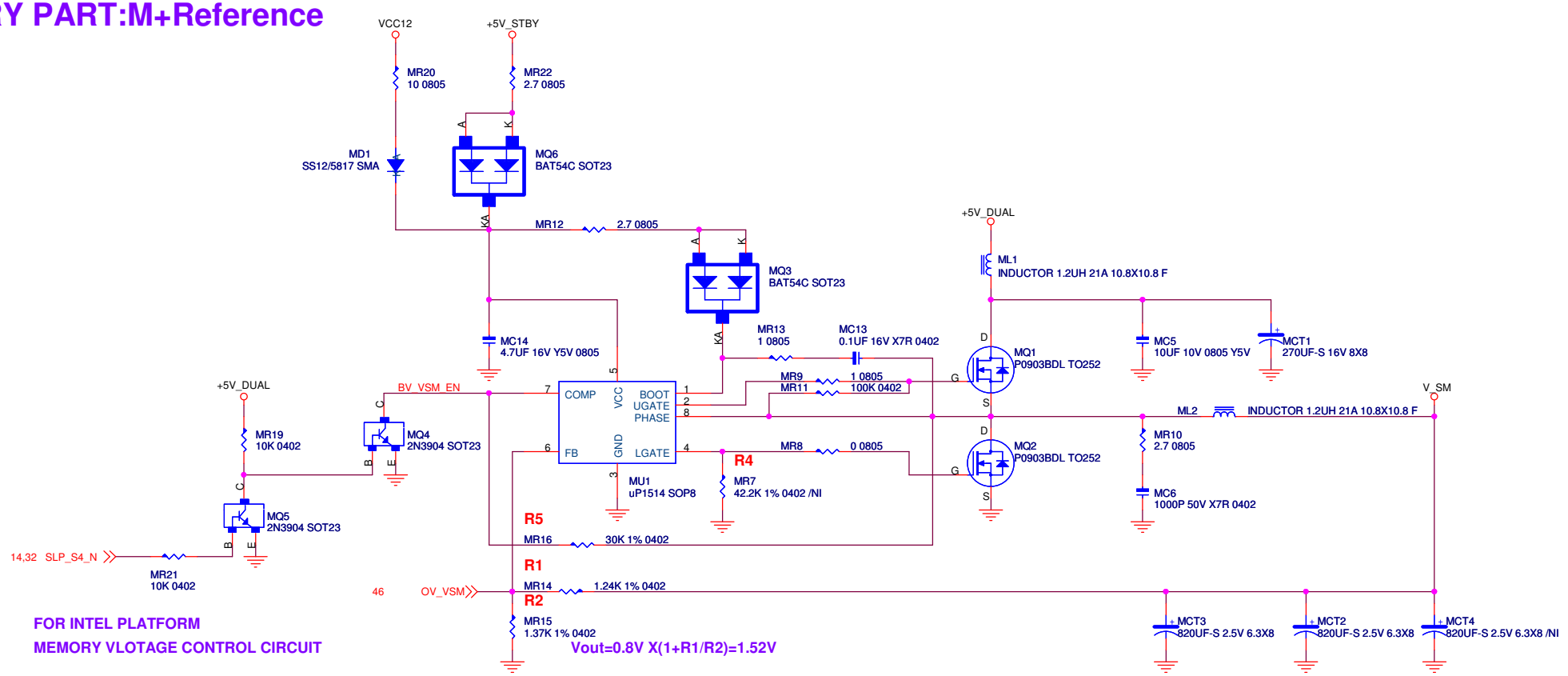

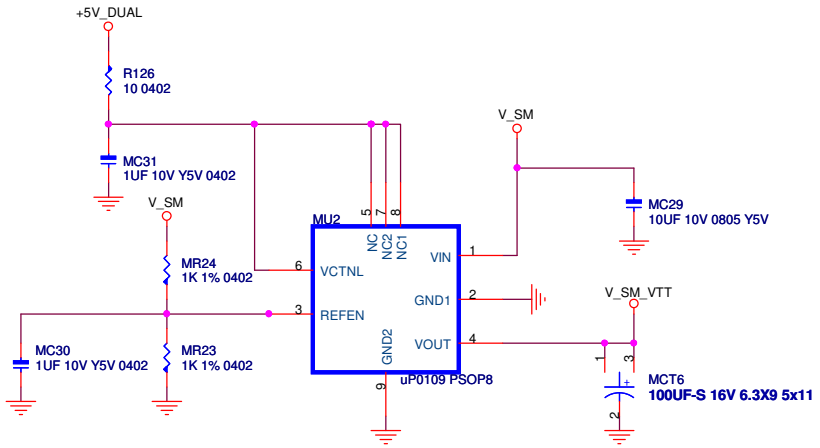

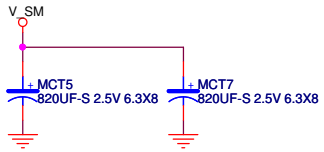

◇BIOSTAR'S PROPRIETARY INFORMATION◆

◇Any unauthorized use, reproduction, duplication, or disclosure of this document will be subject to the applicable civil and/orcriminal penalties.◆

映泰股份有限公司
BIOSTAR GROUP

Title	VSM DC-DC Conver	
Size B	Document Number IZ87D-AHT	Rev 5.3
Date: Friday, June 07, 2013	Sheet 42 of 47	

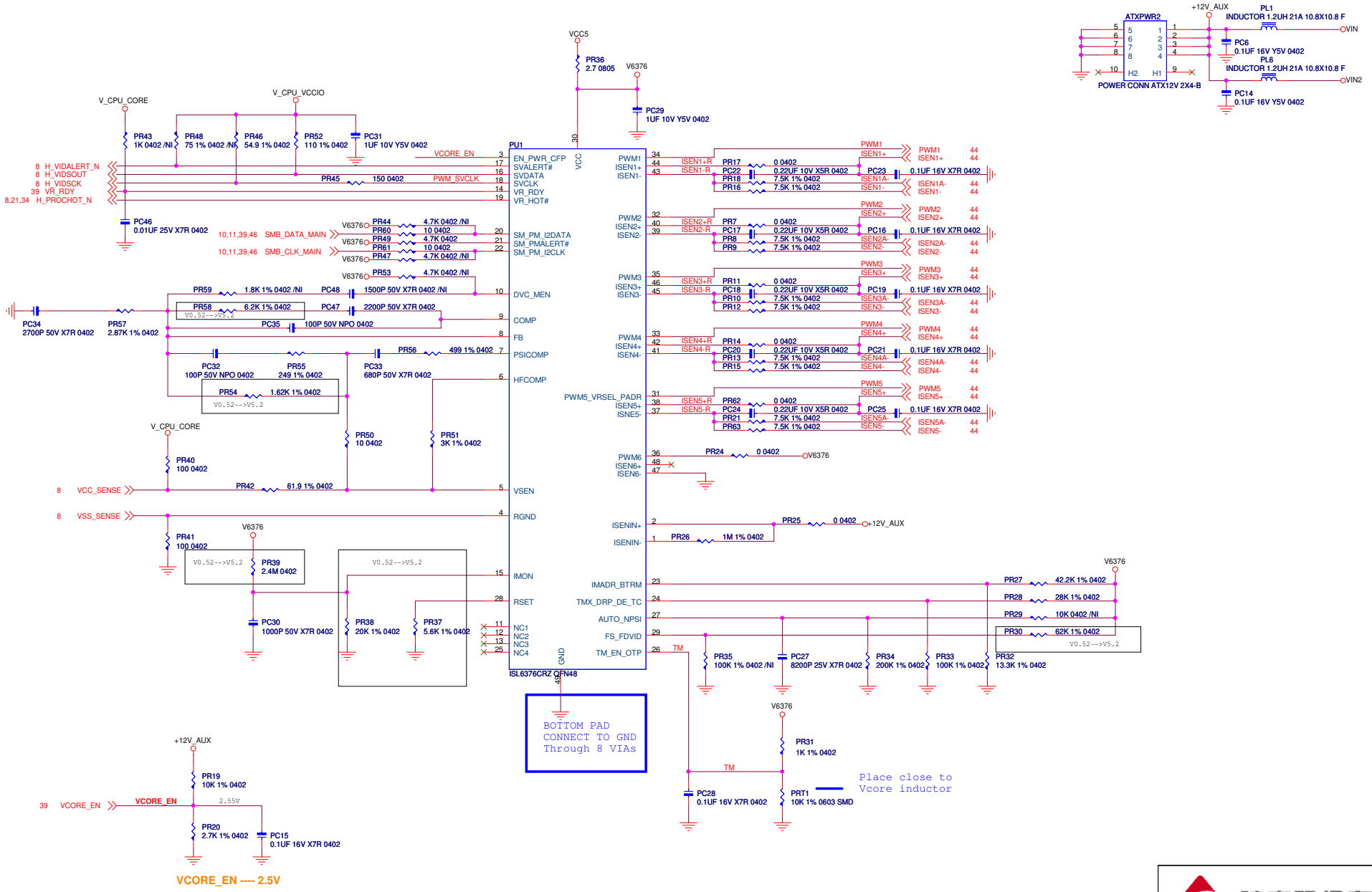
ATXPWR2
POWER CONN ATX12V 2X4-B
+12V_AUX
PL1
INDUCTOR 1.2UH 21A 10.8X10.8 F
PC6
0.1UF 16V Y5V 0402
PL6
INDUCTOR 1.2UH 21A 10.8X10.8 F
PC14
0.1UF 16V Y5V 0402
VIN
VIN2
VCC5
PR36
2.7 0805
V6376
PC29
1UF 10V Y5V 0402
V_CPU_CORE
V_CPU_VCCIO
PR43
1K 0402 /NI
PR48
75 1% 0402 /NI
PR46
54.9 1% 0402
PR52
110 1% 0402
PC31
1UF 10V Y5V 0402
VCORE_EN
PU1
EN_PWR_CFP
SVALERT#
SVDATA
SVCLK
VR_RDY
VR_HOT#
8 H_VIDALERT_N
8 H_VIDSOUT
8 H_VIDSCK
39 VR_RDY
8,21,34 H_PROCHOT_N
PR45
150 0402
PWM_SVCLK
PC46
0.01UF 25V X7R 0402
10,11,39,46 SMB_DATA_MAIN
10,11,39,46 SMB_CLK_MAIN
PR44
4.7K 0402 /NI
PR60
10 0402
PR49
4.7K 0402
PR61
10 0402
PR47
4.7K 0402 /NI
PR53
4.7K 0402 /NI
SM_PM_I2DATA
SM_PMALERT#
SM_PM_I2CLK
PR59
1.8K 1% 0402 /NI
PC48
1500P 50V X7R 0402 /NI
DVC_MEN
PR58
6.2K 1% 0402
PC47
2200P 50V X7R 0402
V0.52-->V5.2
PC34
2700P 50V X7R 0402
PR57
2.87K 1% 0402
PC35
100P 50V NPO 0402
COMP
FB
PR56
499 1% 0402
PSICOMP
PC32
100P 50V NPO 0402
PR55
249 1% 0402
PC33
680P 50V X7R 0402
HFCOMP
PR54
1.62K 1% 0402
V_CPU_CORE
PR50
10 0402
PR51
3K 1% 0402
PR40
100 0402
8 VCC_SENSE
PR42
61.9 1% 0402
VSEN
8 VSS_SENSE
RGND
PR41
100 0402
V6376
PR39
2.4M 0402
IMON
RSET
PC30
1000P 50V X7R 0402
PR38
20K 1% 0402
PR37
5.6K 1% 0402
NC1
NC2
NC3
NC4
GND
ISL6376CRZ QFN48
BOTTOM PAD
CONNECT TO GND
Through 8 VIAs
PWM1
ISEN1+
ISEN1-
PWM2
ISEN2+
ISEN2-
PWM3
ISEN3+
ISEN3-
PWM4
ISEN4+
ISEN4-
PWM5_VRSEL_PADR
ISEN5+
ISNE5-
PWM6
ISEN6+
ISEN6-
PR17
PC22
0.22UF 10V X5R 0402
PC23
0.1UF 16V X7R 0402
PR18
7.5K 1% 0402
PR16
7.5K 1% 0402
PR7
PC17
PC16
PR8
PR9
PR11
PC18
PC19
PR10
PR12
PR14
PC20
PC21
PR13
PR15
PR62
PC24
PC25
PR21
PR63
PR24
0 0402
ISENIN+
ISENIN-
PR25
PR26
1M 1% 0402
+12V_AUX
IMADR_BTRM
TMX_DRP_DE_TC
AUTO_NPSI
FS_FDVID
TM_EN_OTP
TM
PR27
42.2K 1% 0402
PR28
28K 1% 0402
PR29
10K 0402 /NI
PR30
62K 1% 0402
PR35
100K 1% 0402 /NI
PC27
8200P 25V X7R 0402
PR34
200K 1% 0402
PR33
100K 1% 0402
PR32
13.3K 1% 0402
PR31
1K 1% 0402
PC28
0.1UF 16V X7R 0402
PRT1
10K 1% 0603 SMD
Place close to
Vcore inductor
+12V_AUX
PR19
10K 1% 0402
39 VCORE_EN
VCORE_EN
2.55V
PR20
2.7K 1% 0402
PC15
0.1UF 16V X7R 0402
VCORE_EN ---- 2.5V
映泰股份有限公司
BIOSTAR GROUP
Title
ISL6367 PWM controller
Size
Custom
Document Number
IZ87D-AHT
Rev
5.3
Date:
Friday, June 07, 2013
Sheet
43
of
47

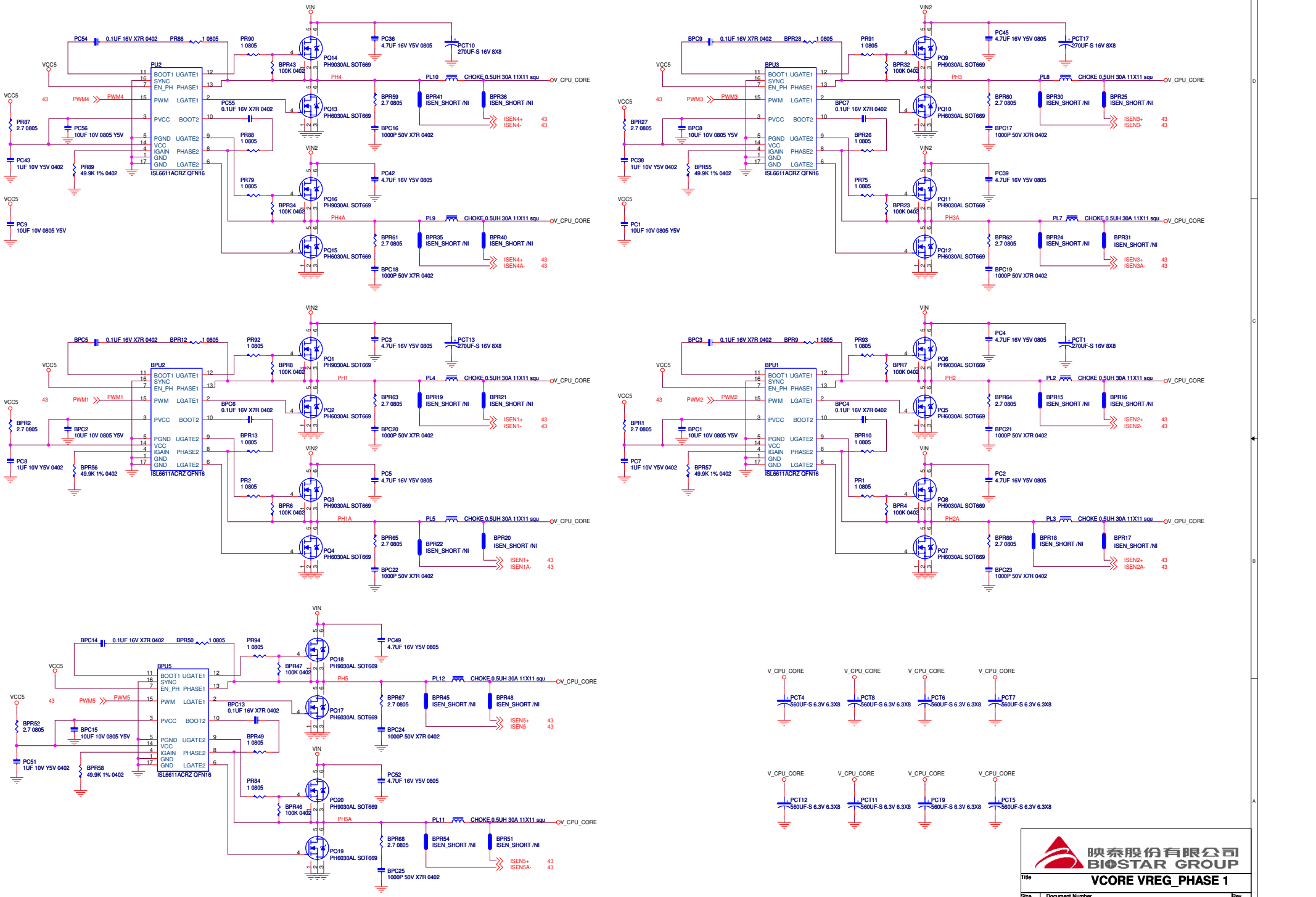

映泰股份有限公司
BIOSTAR GROUP

Title	VCORE VREG_PHASE 1	
Size C	Document Number IZ87D-AHT	Rev 5.3
Date: Friday, June 07, 2013	Sheet 44 of 47	

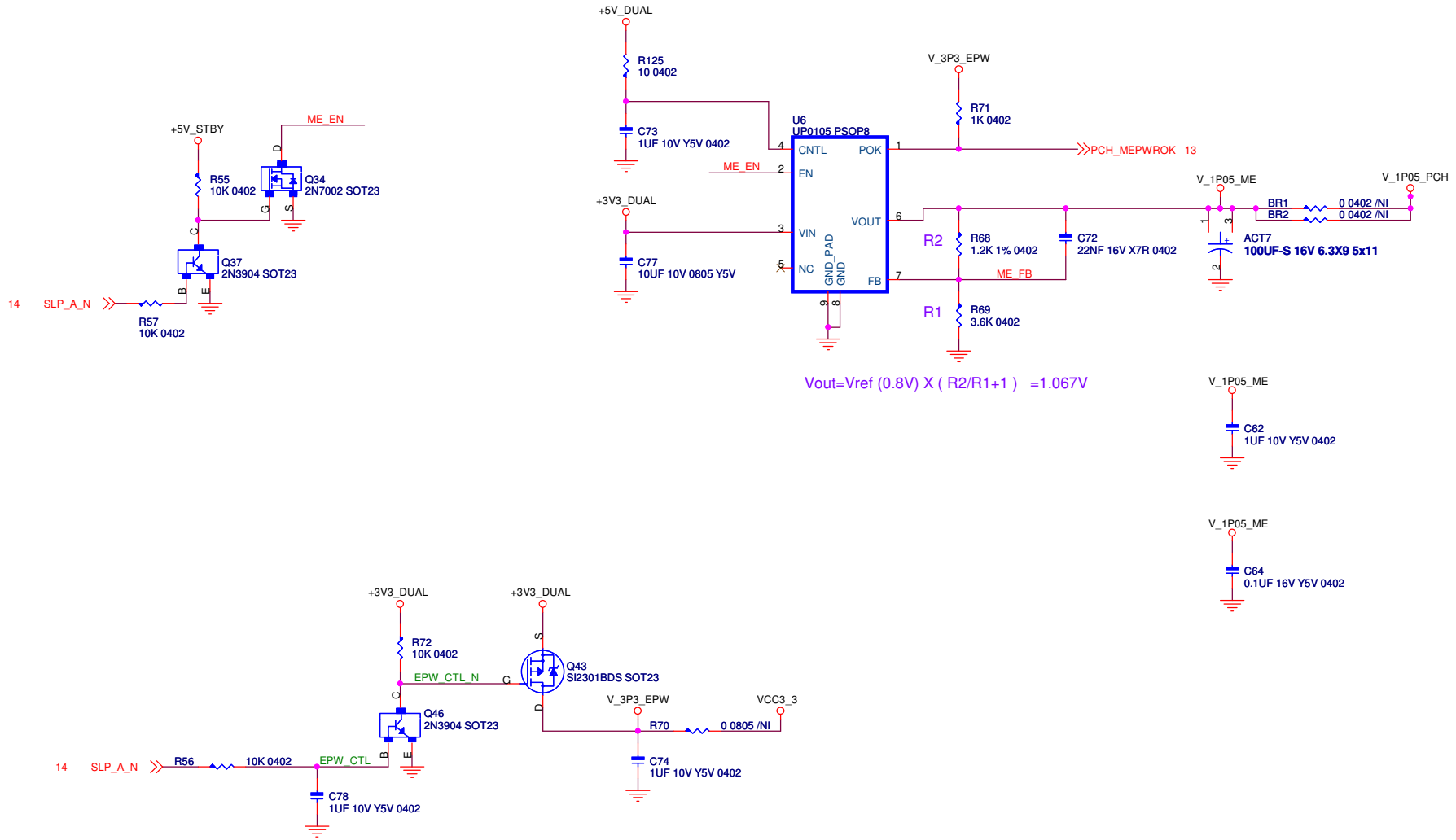

映泰股份有限公司
BIOSTAR GROUP

Title	RESERVED FOR AMT POWER	
Size B	Document Number IZ87D-AHT	Rev 5.3
Date: Friday, June 07, 2013	Sheet 45 of 47	

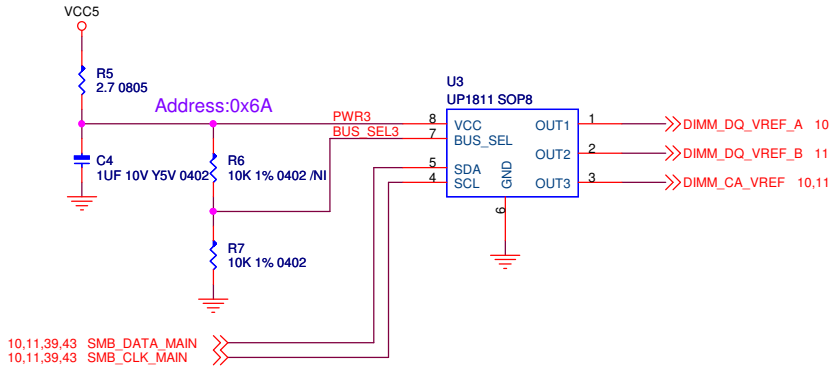

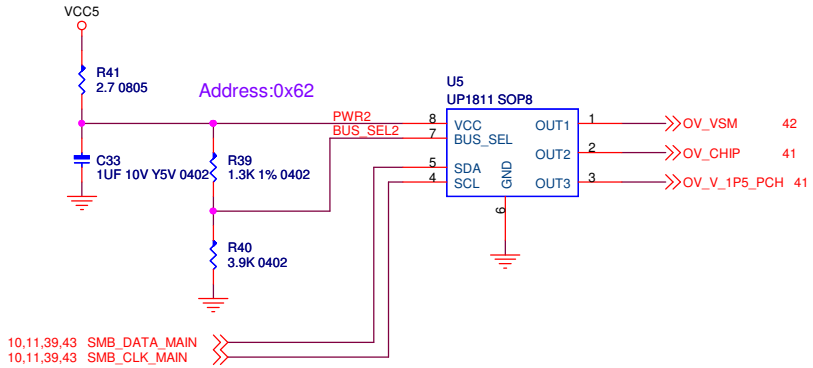

◇BIOSTAR'S PROPRIETARY INFORMATION◆

◇Any unauthorized use, reproduction, duplication, or disclosure of this document will be subject to the applicable civil and/orcriminal penalties.◆

映泰股份有限公司
BIOSTAR GROUP

Title: OVER VOLTAGE

Size: B | Document Number: IZ87D-AHT | Rev: 5.3

Date: Friday, June 07, 2013 | Sheet 46 of 47

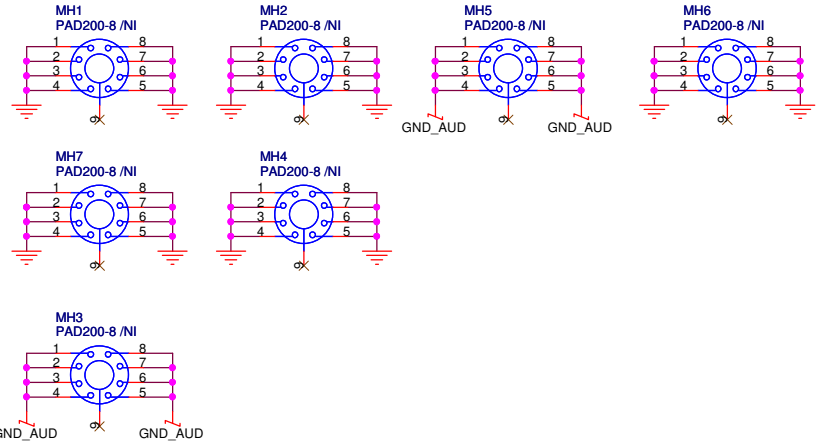

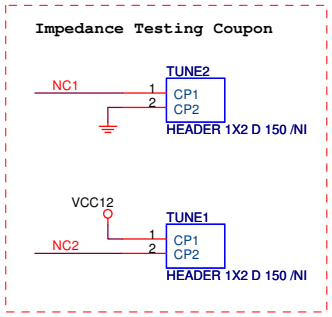

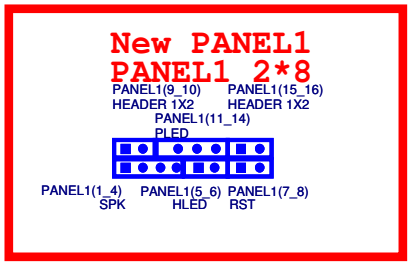

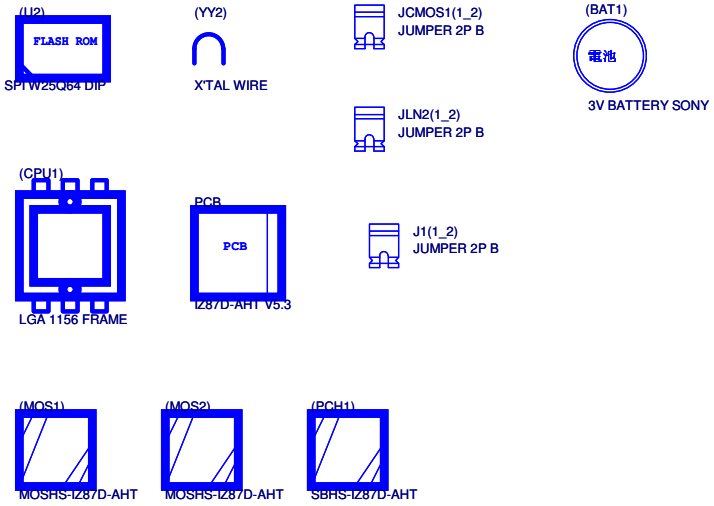

◇BIOSTAR'S PROPRIETARY INFORMATION◆

◇Any unauthorized use, reproduction, duplication, or disclosure of this document will be subject to the applicable civil and/orcriminal penalties.◆

映泰股份有限公司
BIOSTAR GROUP

Title: BOM

Size	Document Number	Rev
B	IZ87D-AHT	5.3

Date: Friday, June 07, 2013 Sheet 47 of 47