PAGE	CONTENTS
1	COVER
2	BLOCK DIAGRAM
3	POWER DELIVERY
4	CLOCK DISTRIBUTION
5	REVISION HISTROY
6-9	AM3 CPU
10	CPU DECOUPLING
11	DDR3 DIMMA1/A2
12	DDR3 DIMMB1/B2
13	RS880G-HT LINK I/F
14	RS880G-PCIE I/F
15	RS880G-SYSTEM I/F
16	RS880G-SPMEM
17	RS880G-POWER
18	CLOCK GEN
19	SB710-PCIE/PCI/CPU/LPC
20	SB710-ACPI/GPIO/USB/AUD
21	SB710-SATA/HWM/SPI
22	SB710-POWER&DECOUPLING
23	SB710-STRAPS
24	PE X16 SLOT 1
25	VGA
26	DVI/HDMI
27	NI
28	PCI SLOT 1/2
29	NI
30	USB CONN
31	FRONT USB
32	Super I/O ITE8721FBX
33	FAN & POWER CONN
34	K/B, MOUSE & FDD
35	H/W MONITOR
36	FRONT PANEL/LED
37	CODEC ALC892/662
38	AUDIO CONNECTOR
39	EUP POWER
40	Over Voltage IC/ACC FUNCTION
41	CPU VCC_CORE DC-DC CONVER1
42	PH LED
43	MEM POWER/POWER SEQUENCE
44	NB/SB CORE POWER
45	RTL8111E/8105E
46	COM/PRINT HEADER
47	BOM

TA880GB

A88PE-M3T

(RS880G/890GX&SB710)

REV 6.0

DDR3 X 4 Dual channel , PCI-Ex16 X 1 , PCI X 2 ,RELTEK 10/100/1000 PCI-E Lan , AMD K8-940

映泰股份有限公司
BIOSTAR GROUP

Title	COVER	
Size: Custom	Document Number: A88PE-M3T	Rev: 6.0
Date: Monday, June 28, 2010	Sheet 1 of 47	

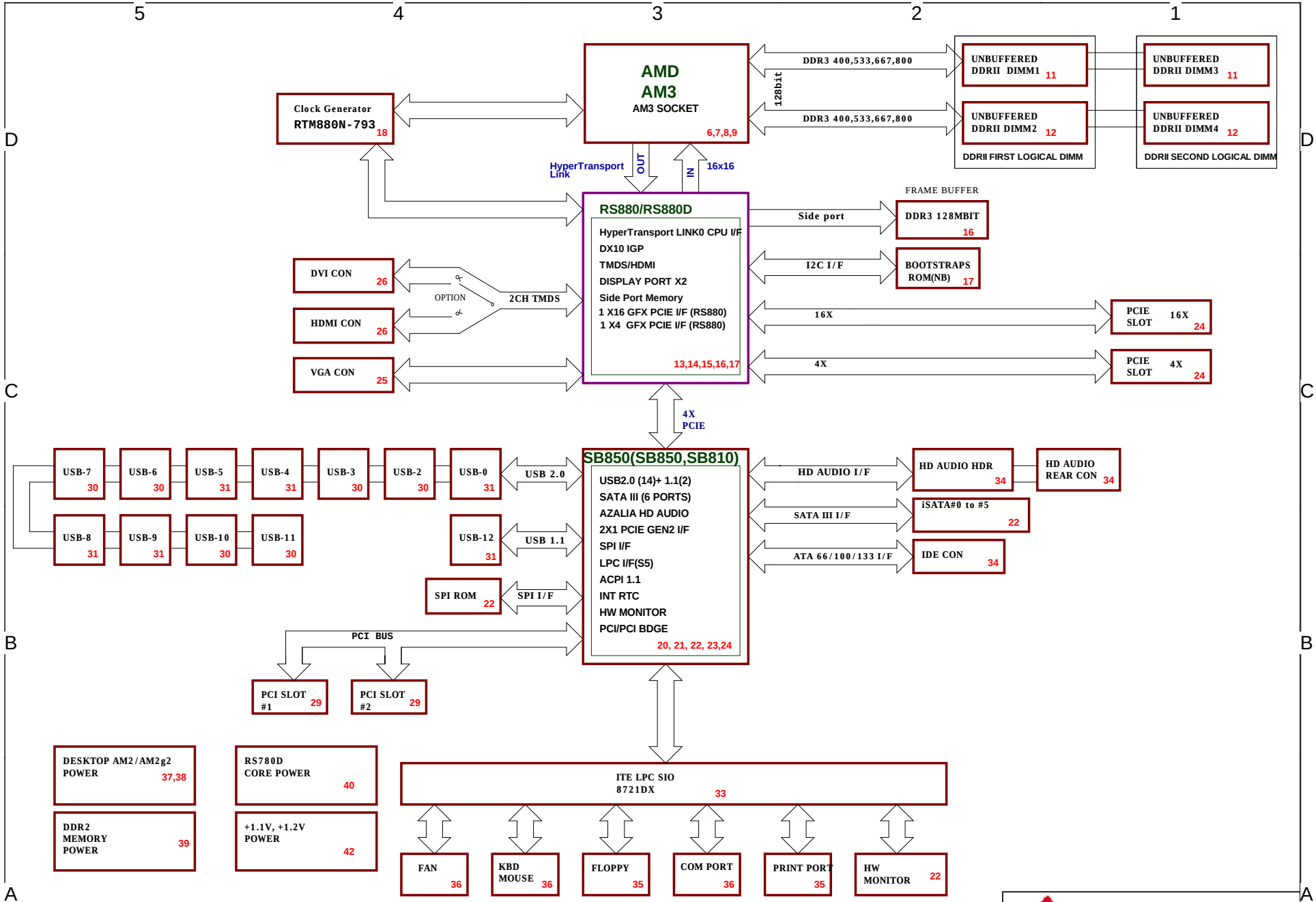

映泰股份有限公司
BIOSTAR GROUP

Title: **BLOCK DIAGRAM**

Size	Document Number	Rev
Custom	**A88PE-M3T**	6.0

Date: Monday, June 28, 2010 Sheet 2 of 47

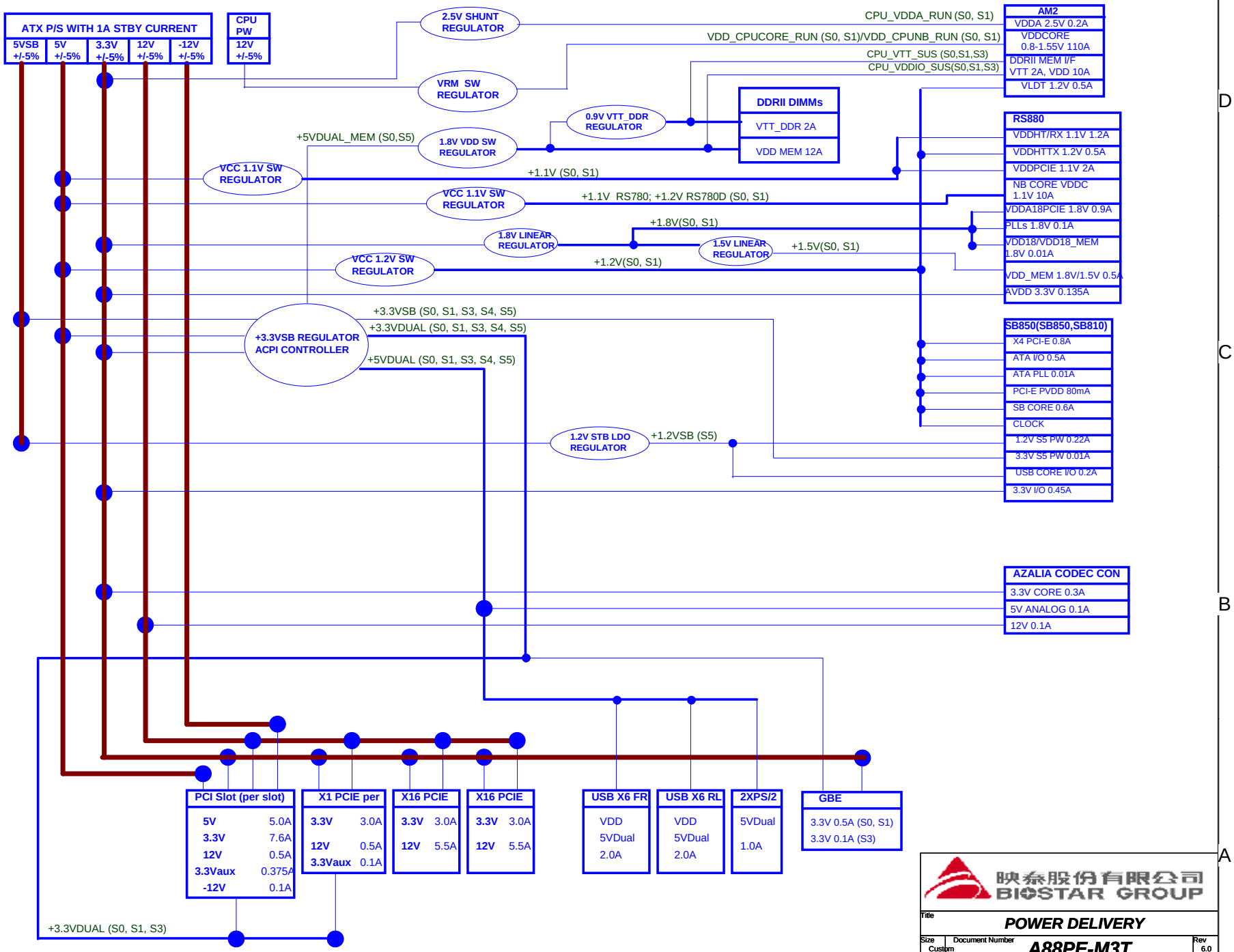
ATX P/S WITH 1A STBY CURRENT
5VSB +/-5%
5V +/-5%
3.3V +/-5%
12V +/-5%
-12V +/-5%
CPU PW
12V +/-5%
2.5V SHUNT REGULATOR
VRM SW REGULATOR
0.9V VTT_DDR REGULATOR
1.8V VDD SW REGULATOR
VCC 1.1V SW REGULATOR
VCC 1.1V SW REGULATOR
1.8V LINEAR REGULATOR
1.5V LINEAR REGULATOR
VCC 1.2V SW REGULATOR
+3.3VSB REGULATOR ACPI CONTROLLER
1.2V STB LDO REGULATOR
CPU_VDDA_RUN (S0, S1)
VDD_CPUCORE_RUN (S0, S1)/VDD_CPUNB_RUN (S0, S1)
CPU_VTT_SUS (S0,S1,S3)
CPU_VDDIO_SUS(S0,S1,S3)
+5VDUAL_MEM (S0,S5)
+1.1V (S0, S1)
+1.1V RS780; +1.2V RS780D (S0, S1)
+1.8V(S0, S1)
+1.5V(S0, S1)
+1.2V(S0, S1)
+3.3VSB (S0, S1, S3, S4, S5)
+3.3VDUAL (S0, S1, S3, S4, S5)
+5VDUAL (S0, S1, S3, S4, S5)
+1.2VSB (S5)
+3.3VDUAL (S0, S1, S3)
AM2
VDDA 2.5V 0.2A
VDDCORE 0.8-1.55V 110A
DDRII MEM I/F VTT 2A, VDD 10A
VLDT 1.2V 0.5A
DDRII DIMMs
VTT_DDR 2A
VDD MEM 12A
RS880
VDDHT/RX 1.1V 1.2A
VDDHTTX 1.2V 0.5A
VDDPCIE 1.1V 2A
NB CORE VDDC 1.1V 10A
VDDA18PCIE 1.8V 0.9A
PLLs 1.8V 0.1A
VDD18/VDD18_MEM 1.8V 0.01A
VDD_MEM 1.8V/1.5V 0.5A
AVDD 3.3V 0.135A
SB850(SB850,SB810)
X4 PCI-E 0.8A
ATA I/O 0.5A
ATA PLL 0.01A
PCI-E PVDD 80mA
SB CORE 0.6A
CLOCK
1.2V S5 PW 0.22A
3.3V S5 PW 0.01A
USB CORE I/O 0.2A
3.3V I/O 0.45A
AZALIA CODEC CON
3.3V CORE 0.3A
5V ANALOG 0.1A
12V 0.1A
PCI Slot (per slot)
5V 5.0A
3.3V 7.6A
12V 0.5A
3.3Vaux 0.375A
-12V 0.1A
X1 PCIE per
3.3V 3.0A
12V 0.5A
3.3Vaux 0.1A
X16 PCIE
3.3V 3.0A
12V 5.5A
X16 PCIE
3.3V 3.0A
12V 5.5A
USB X6 FR
VDD
5VDual
2.0A
USB X6 RL
VDD
5VDual
2.0A
2XPS/2
5VDual
1.0A
GBE
3.3V 0.5A (S0, S1)
3.3V 0.1A (S3)
映泰股份有限公司
BIOSTAR GROUP
Title
POWER DELIVERY
Size
Custom
Document Number
A88PE-M3T
Rev
6.0
Date: Monday, June 28, 2010
Sheet 3 of 47

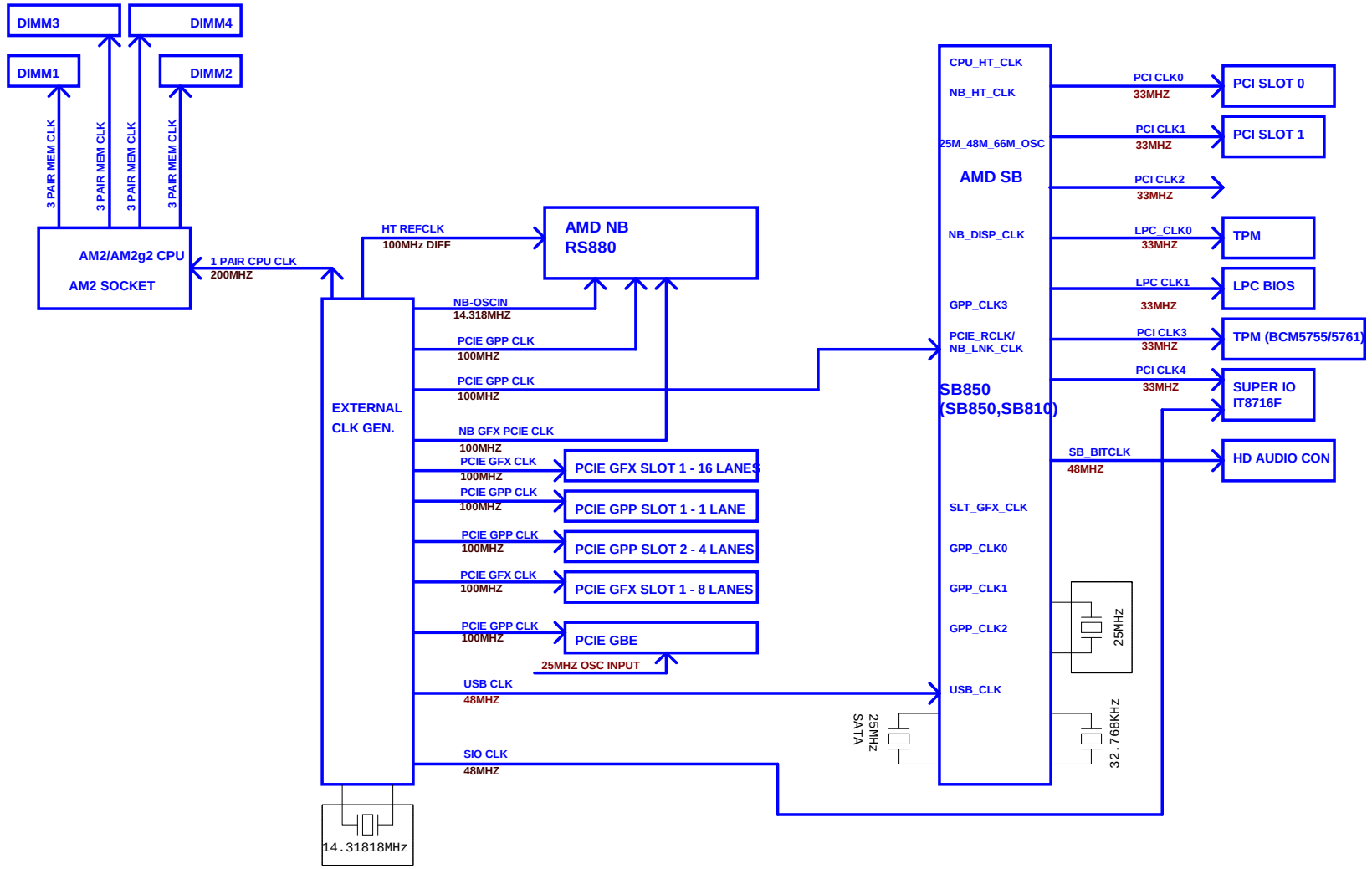

映泰股份有限公司 BIOSTAR GROUP		
Title	CLOCK DISTRIBUTION	
Size: Custom	Document Number: A88PE-M3T	Rev: 6.0
Date: Monday, June 28, 2010	Sheet 4 of 47	

Testing Point for Socke AM3 platform

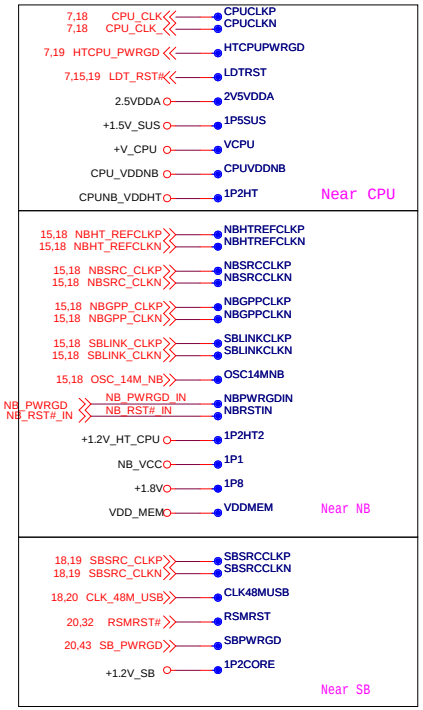

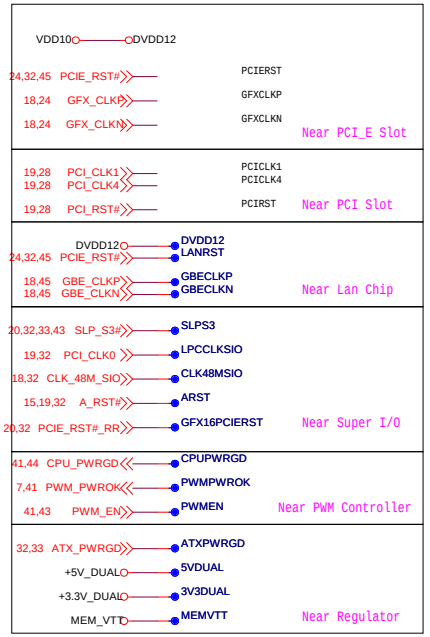

映泰股份有限公司
BIOSTAR GROUP

Title: REVISION HISTORY

Size	Document Number	Rev
Custom	A88PE-M3T	6.0

Date: Monday, June 28, 2010 Sheet 5 of 47

HyperTransport 3.0



Title	AM3 CPU HT	
Size: Custom	Document Number: A88PE-M3T	Rev: 6.0
Date: Monday, June 28, 2010	Sheet 6 of 47	

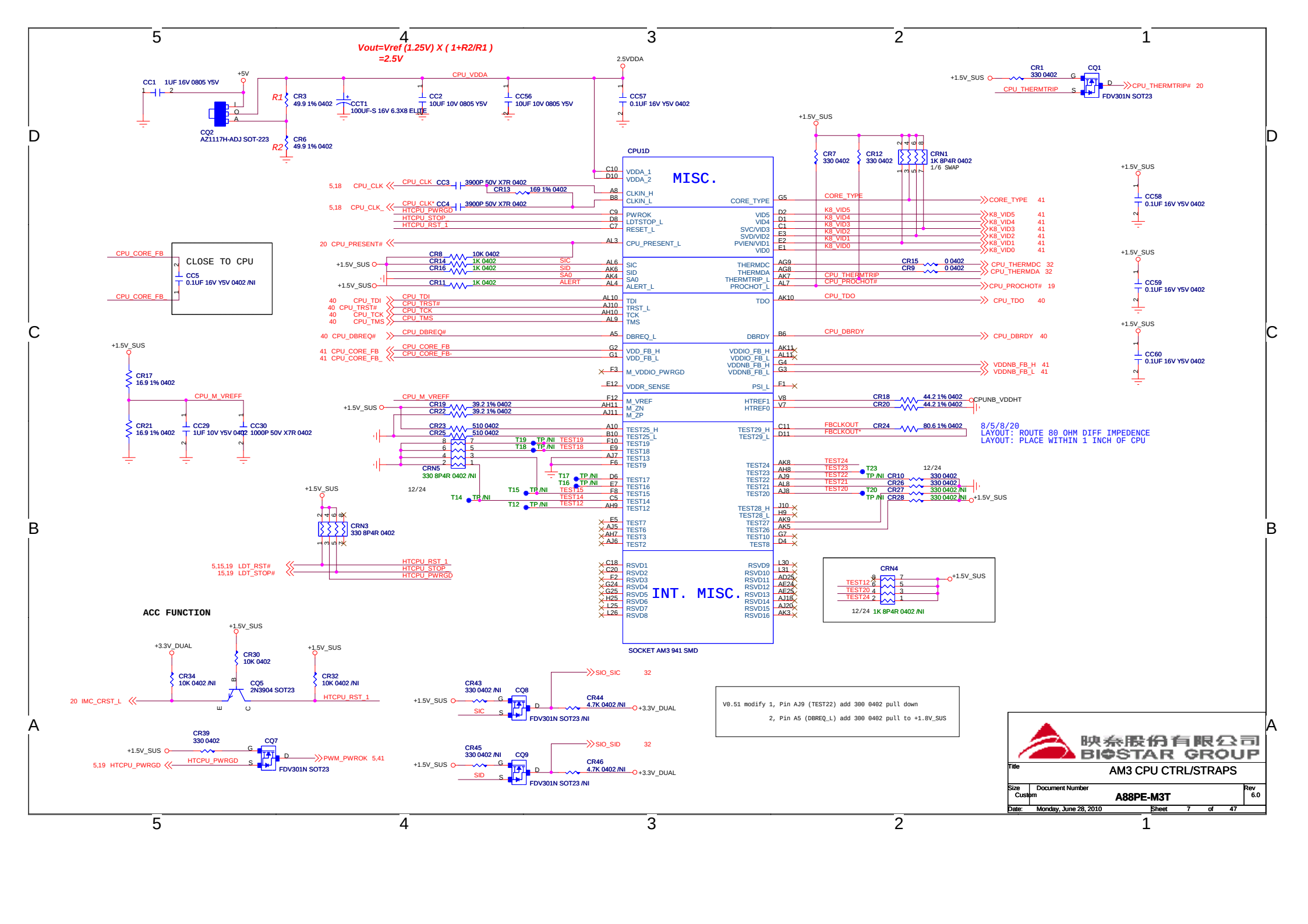
Vout=Vref (1.25V) X (1+R2/R1)
=2.5V
CPU1D
MISC.
INT. MISC.
SOCKET AM3 941 SMD
CLOSE TO CPU
ACC FUNCTION
CRN4
CRN5
CRN3
V0.51 modify 1, Pin AJ9 (TEST22) add 300 0402 pull down
2, Pin A5 (DBREQ_L) add 300 0402 pull to +1.8V_SUS
8/5/8/20
LAYOUT: ROUTE 80 OHM DIFF IMPEDENCE
LAYOUT: PLACE WITHIN 1 INCH OF CPU
AM3 CPU CTRL/STRAPS
A88PE-M3T
Monday, June 28, 2010

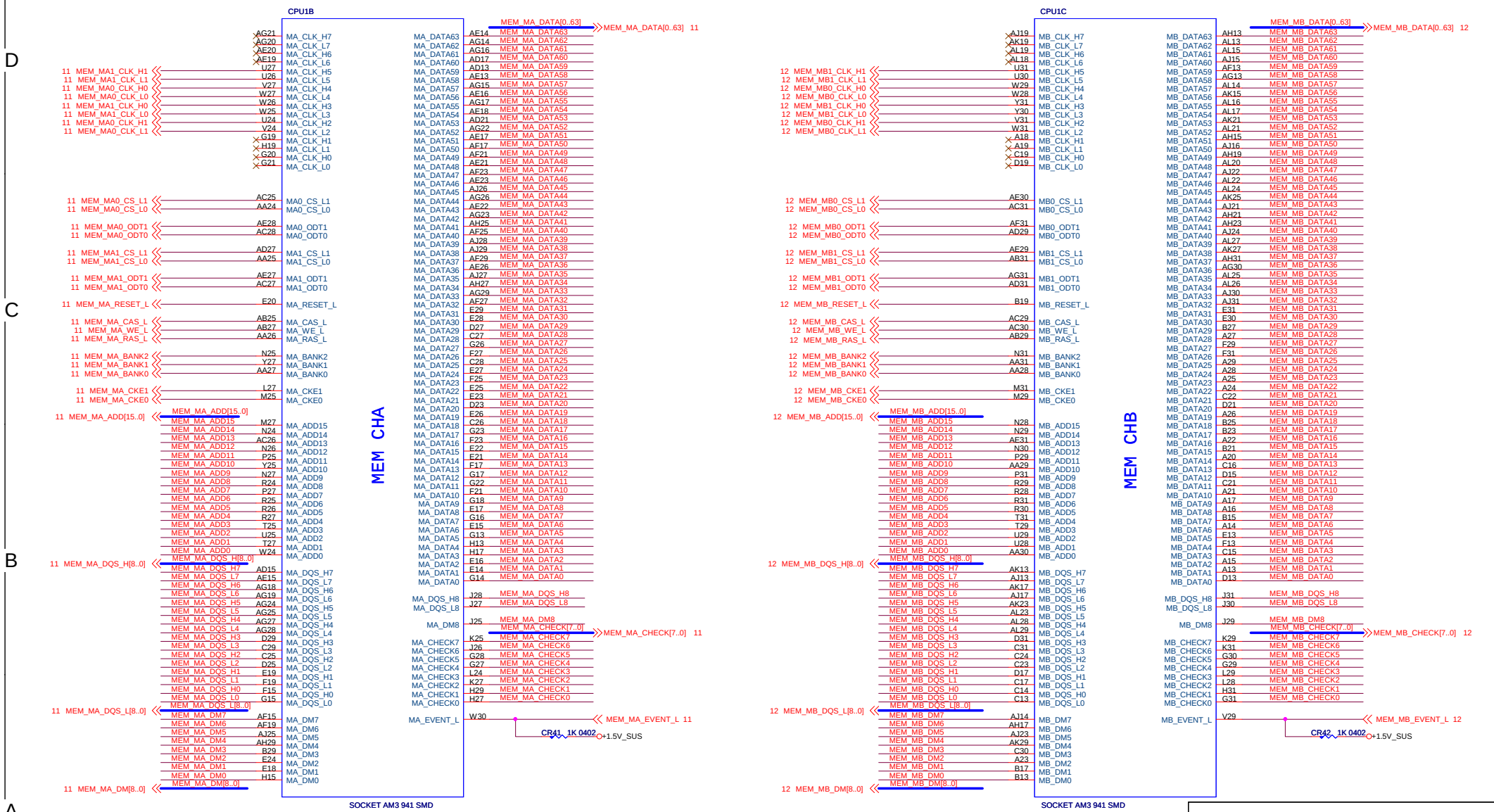

映泰股份有限公司
BIOSTAR GROUP

Title	AM3 CPU MEMORY CHA/B	
Size: Custom	Document Number: A88PE-M3T	Rev: 6.0
Date: Monday, June 28, 2010	Sheet 8 of 47	

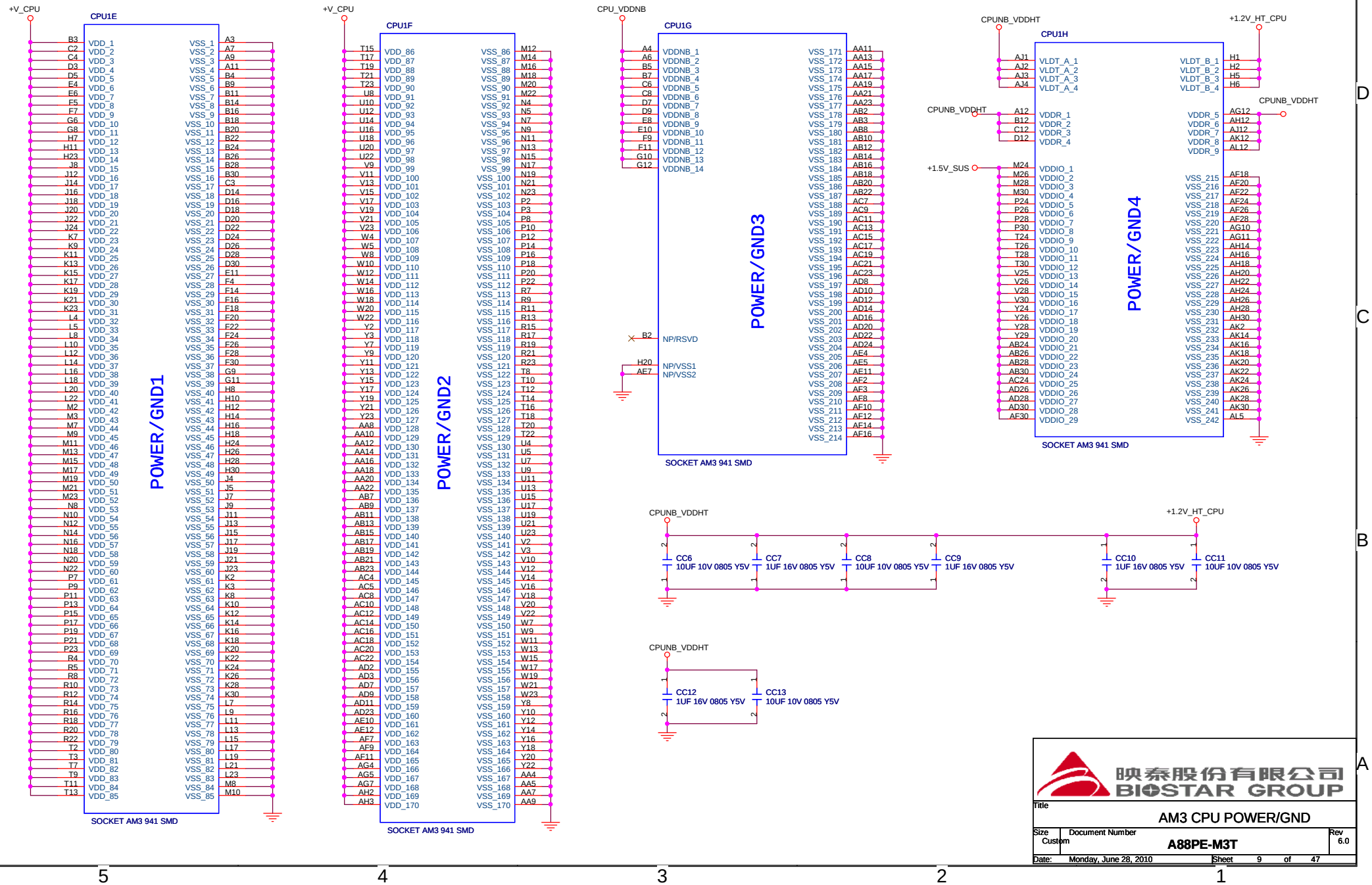

映泰股份有限公司
BIOSTAR GROUP

Title	AM3 CPU POWER/GND	
Size: Custom	Document Number: A88PE-M3T	Rev: 6.0
Date: Monday, June 28, 2010	Sheet 9 of 47	



映泰股份有限公司
BIOSTAR GROUP

Title: DECOUPLING		
Size: Custom	Document Number: A88PE-M3T	Rev: 6.0
Date: Monday, June 28, 2010	Sheet 10 of 47	

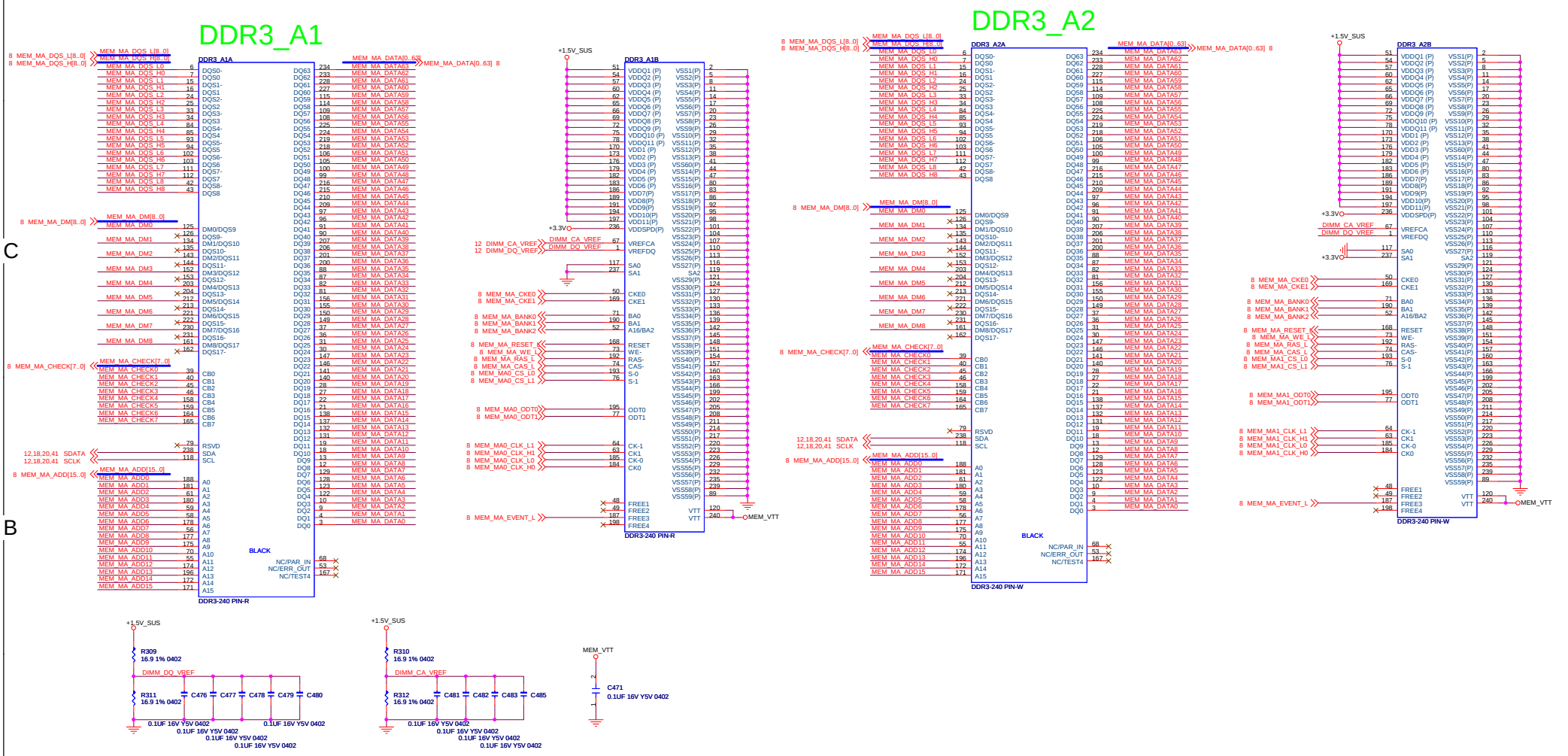

映泰股份有限公司
BIOSTAR GROUP

Title: DDR3 DIMMA1/A2

Size: Custom | Document Number: A88PE-M3T | Rev: 6.0

Date: Monday, June 28, 2010 | Sheet 11 of 47

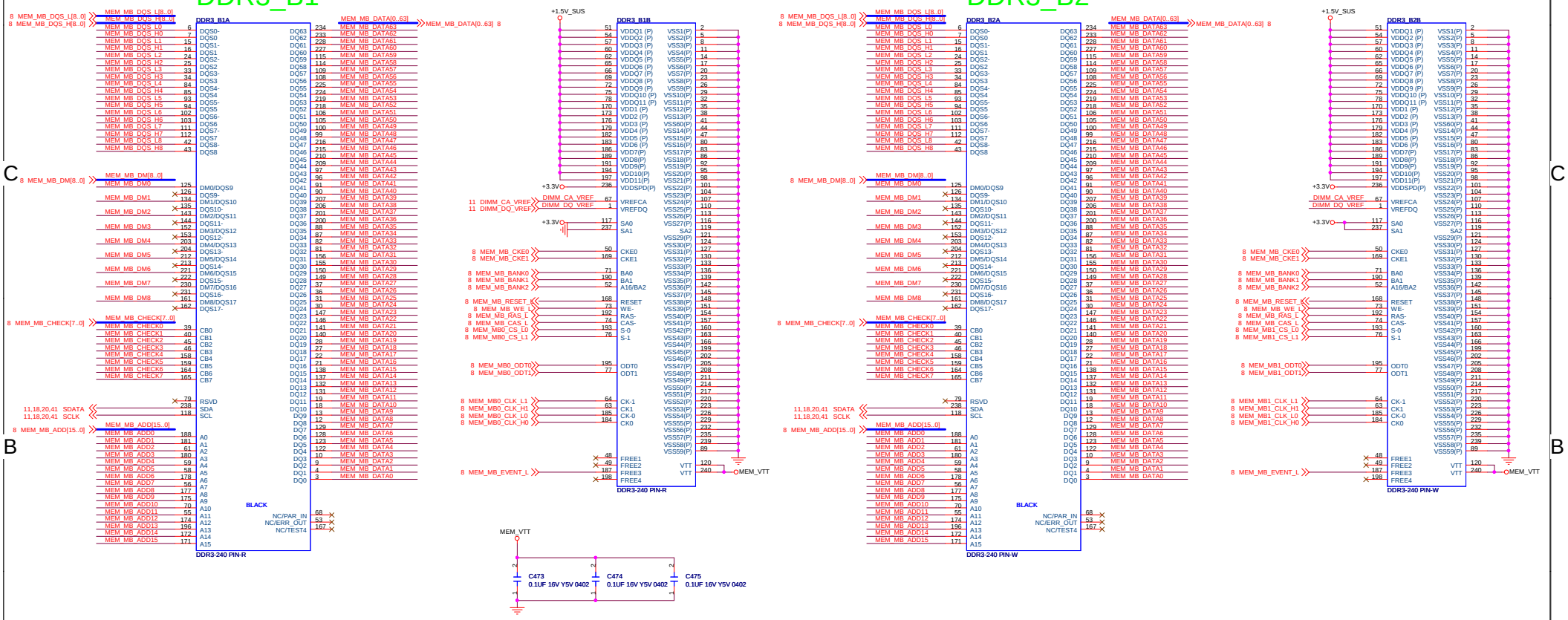

Title	DDR3 DIMMB1/B2		
Size: Custom	Document Number: A88PE-M3T		Rev: 6.0
Date: Monday, June 28, 2010	Sheet 12 of 47		



映泰股份有限公司
BIOSTAR GROUP

Title	RS880G/890G PCI-E	
Size B	Document Number A88PE-M3T	Rev 6.0
Date: Monday, June 28, 2010	Sheet 13 of 47	

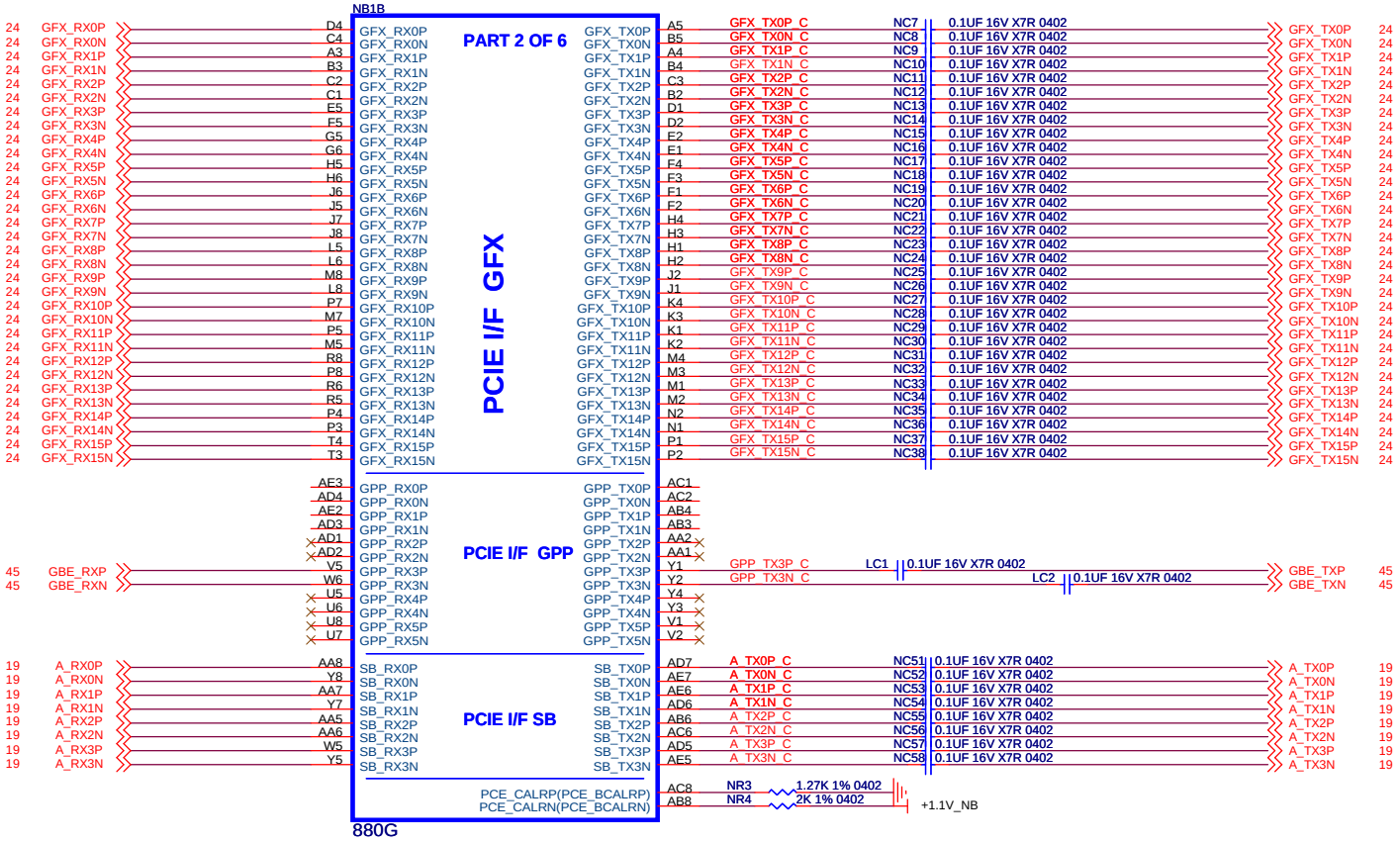

映泰股份有限公司
BIOSTAR GROUP

Title	RS880G/890G PCI-E	
Size B	Document Number A88PE-M3T	Rev 6.0
Date: Monday, June 28, 2010	Sheet 14 of 47	

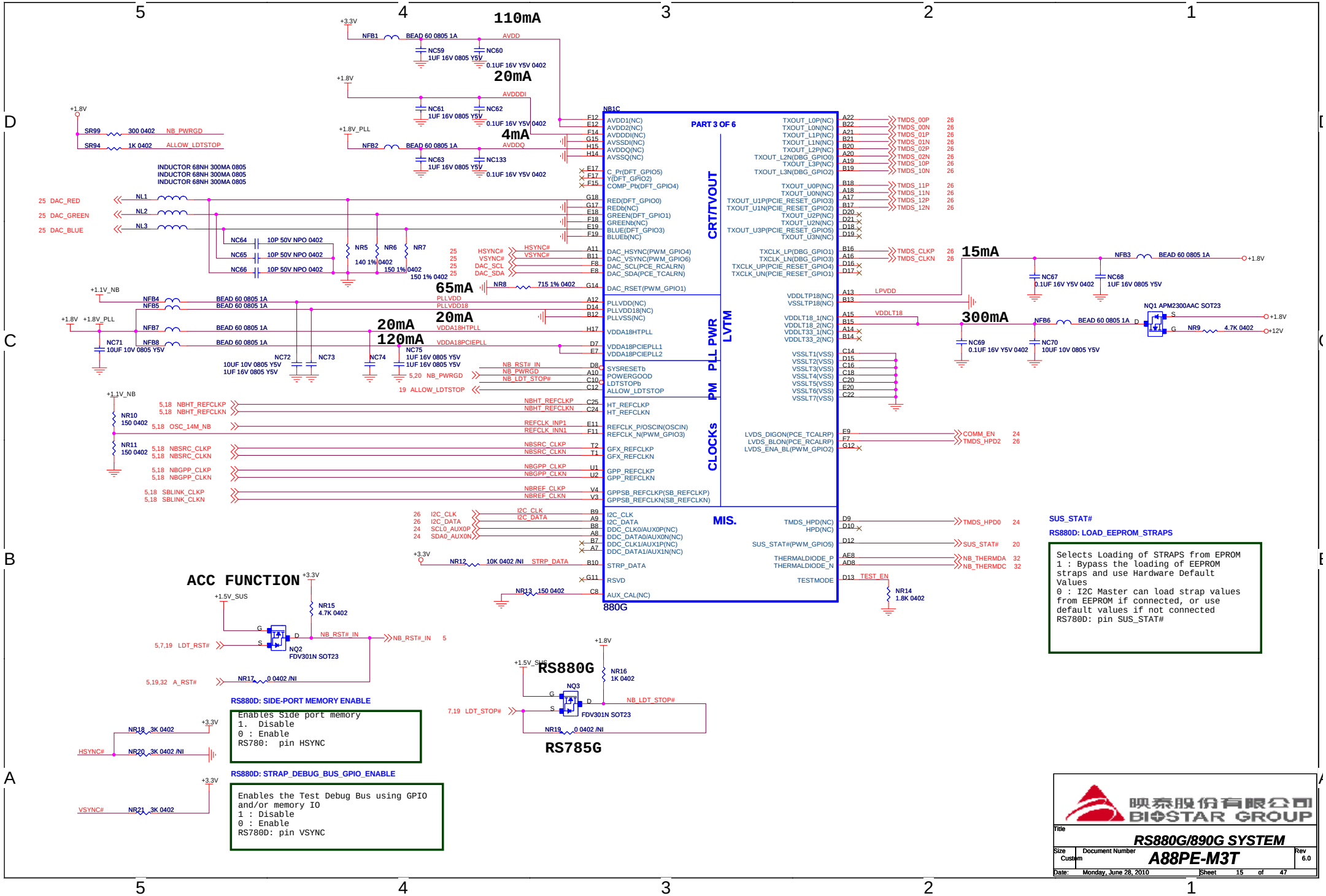
110mA
20mA
4mA
65mA
20mA
120mA
20mA
15mA
300mA
NB1C
PART 3 OF 6
880G
CRT/TVOUT
PLL PWR
LVTM
PM
CLOCKs
MIS.
ACC FUNCTION
RS880G
RS785G
RS880D: LOAD_EEPROM_STRAPS
Selects Loading of STRAPS from EPROM
1 : Bypass the loading of EEPROM straps and use Hardware Default Values
0 : I2C Master can load strap values from EEPROM if connected, or use default values if not connected
RS780D: pin SUS_STAT#
RS880D: SIDE-PORT MEMORY ENABLE
Enables Side port memory
1. Disable
0 : Enable
RS780: pin HSYNC
RS880D: STRAP_DEBUG_BUS_GPIO_ENABLE
Enables the Test Debug Bus using GPIO and/or memory IO
1 : Disable
0 : Enable
RS780D: pin VSYNC
映泰股份有限公司
BIOSTAR GROUP
RS880G/890G SYSTEM
A88PE-M3T
Monday, June 28, 2010
Sheet 15 of 47

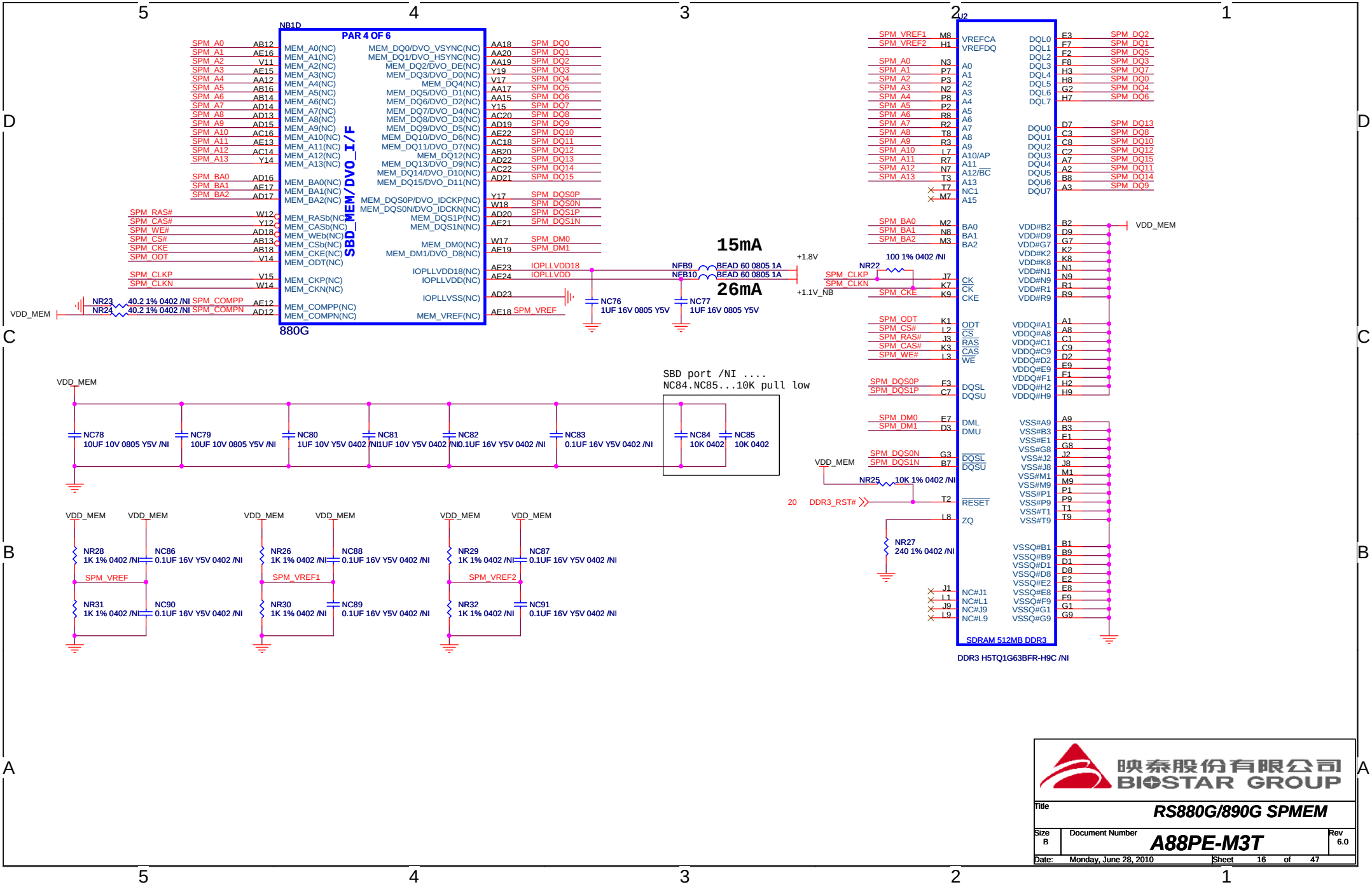
NB1D
PAR 4 OF 6
SBD_MEM/DVO_I/F
880G
15mA
26mA
SBD port /NI ....
NC84.NC85...10K pull low
U2
SDRAM 512MB DDR3
DDR3 H5TQ1G63BFR-H9C /NI
映泰股份有限公司
BIOSTAR GROUP
Title
RS880G/890G SPMEM
Size B
Document Number
A88PE-M3T
Rev 6.0
Date: Monday, June 28, 2010
Sheet 16 of 47

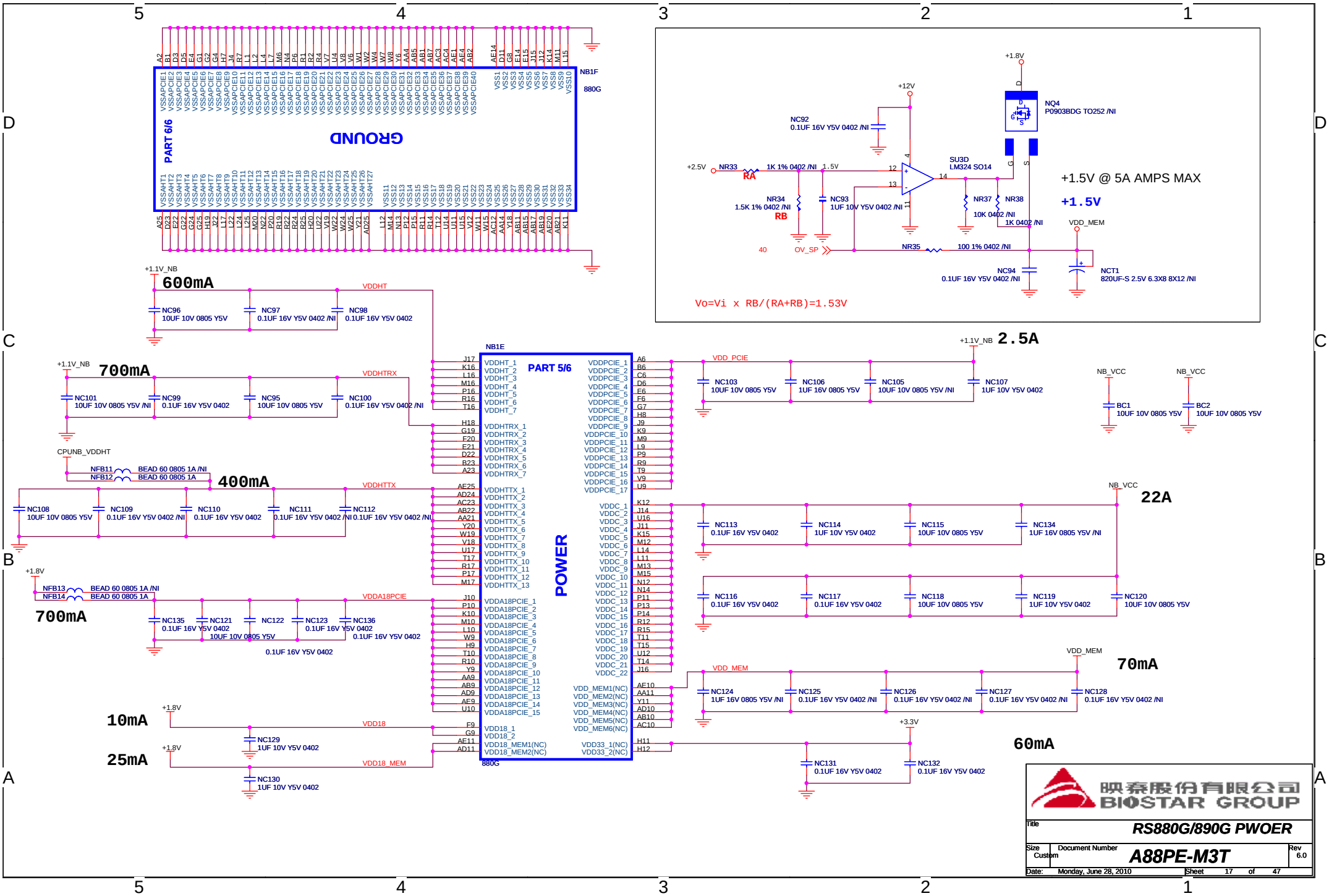
PART 6/6
GROUND
NB1F
880G
+1.8V
+12V
NC92
0.1UF 16V Y5V 0402 /NI
NQ4
P0903BDG TO252 /NI
+2.5V
NR33
1K 1% 0402 /NI
1.5V
RA
SU3D
LM324 SO14
+1.5V @ 5A AMPS MAX
+1.5V
NR34
1.5K 1% 0402 /NI
RB
NC93
1UF 10V Y5V 0402 /NI
NR37
10K 0402 /NI
NR38
1K 0402 /NI
VDD_MEM
40
OV_SP
NR35
100 1% 0402 /NI
NC94
0.1UF 16V Y5V 0402 /NI
NCT1
820UF-S 2.5V 6.3X8 8X12 /NI
Vo=Vi x RB/(RA+RB)=1.53V
+1.1V_NB
600mA
NC96
10UF 10V 0805 Y5V
NC97
0.1UF 16V Y5V 0402 /NI
NC98
0.1UF 16V Y5V 0402
VDDHT
NB1E
PART 5/6
POWER
700mA
NC101
10UF 10V 0805 Y5V /NI
NC99
0.1UF 16V Y5V 0402
NC95
10UF 10V 0805 Y5V
NC100
0.1UF 16V Y5V 0402 /NI
VDDHTRX
CPUNB_VDDHT
NFB11
NFB12
BEAD 60 0805 1A /NI
BEAD 60 0805 1A
400mA
NC108
10UF 10V 0805 Y5V
NC109
0.1UF 16V Y5V 0402 /NI
NC110
0.1UF 16V Y5V 0402
NC111
0.1UF 16V Y5V 0402 /NI
NC112
0.1UF 16V Y5V 0402 /NI
VDDHTTX
+1.8V
NFB13
NFB14
BEAD 60 0805 1A /NI
BEAD 60 0805 1A
700mA
NC135
0.1UF 16V Y5V 0402
NC121
10UF 10V 0805 Y5V
NC122
0.1UF 16V Y5V 0402
NC123
0.1UF 16V Y5V 0402
NC136
0.1UF 16V Y5V 0402
VDDA18PCIE
10mA
25mA
VDD18
VDD18_MEM
NC129
1UF 10V Y5V 0402
NC130
1UF 10V Y5V 0402
+1.1V_NB
2.5A
VDD_PCIE
NC103
10UF 10V 0805 Y5V
NC106
1UF 16V 0805 Y5V
NC105
10UF 10V 0805 Y5V /NI
NC107
1UF 10V Y5V 0402
NB_VCC
BC1
10UF 10V 0805 Y5V
BC2
10UF 10V 0805 Y5V
NB_VCC
22A
NC113
0.1UF 16V Y5V 0402
NC114
1UF 10V Y5V 0402
NC115
10UF 10V 0805 Y5V
NC134
1UF 16V 0805 Y5V /NI
NC116
0.1UF 16V Y5V 0402
NC117
0.1UF 16V Y5V 0402
NC118
10UF 10V 0805 Y5V
NC119
1UF 10V Y5V 0402
NC120
10UF 10V 0805 Y5V
VDD_MEM
70mA
NC124
1UF 16V 0805 Y5V /NI
NC125
0.1UF 16V Y5V 0402 /NI
NC126
0.1UF 16V Y5V 0402 /NI
NC127
0.1UF 16V Y5V 0402 /NI
NC128
0.1UF 16V Y5V 0402 /NI
+3.3V
60mA
NC131
0.1UF 16V Y5V 0402
NC132
0.1UF 16V Y5V 0402
映泰股份有限公司
BIOSTAR GROUP
Title
RS880G/890G PWOER
Size
Custom
Document Number
A88PE-M3T
Rev
6.0
Date:
Monday, June 28, 2010
Sheet
17
of
47

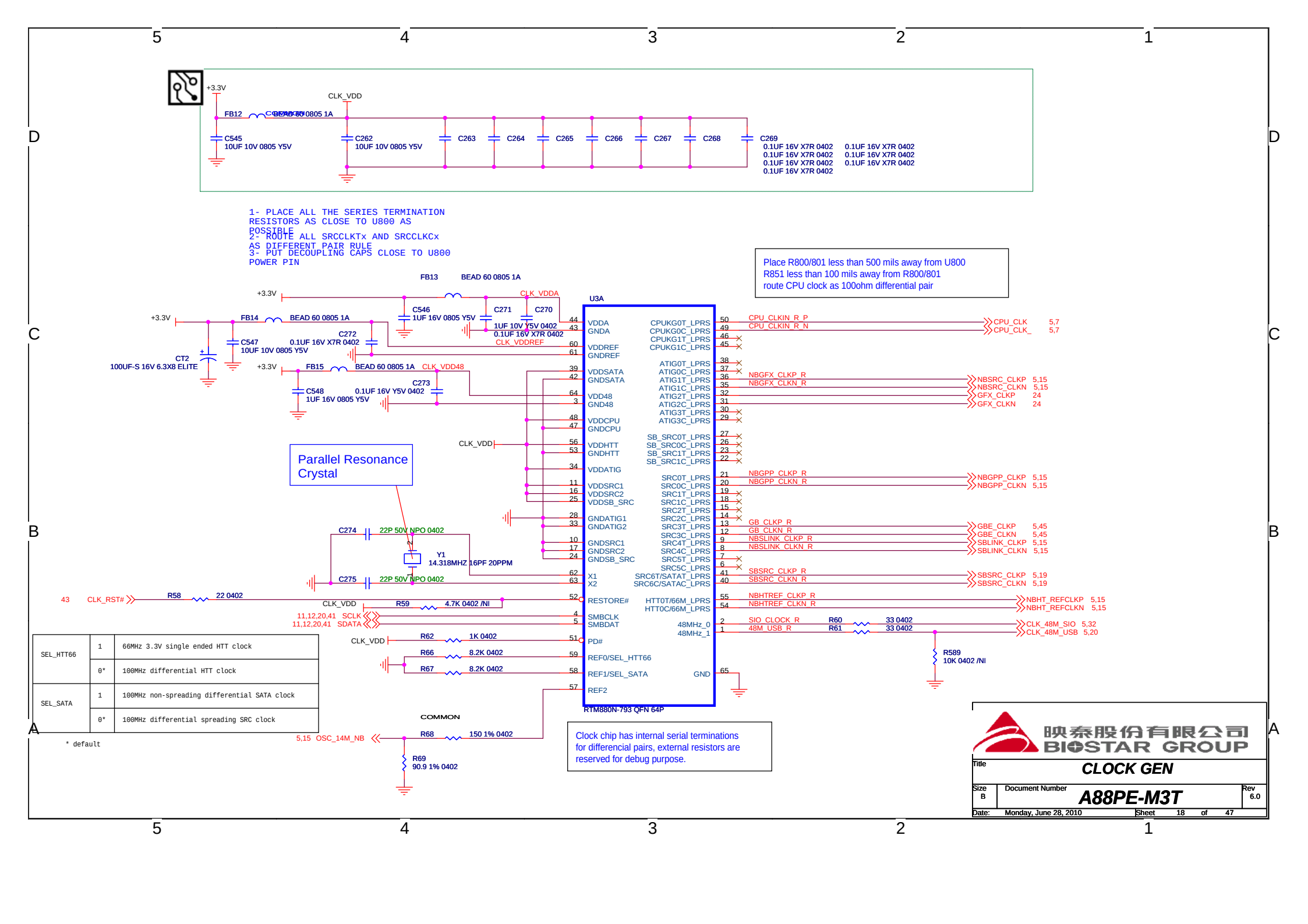
+3.3V
CLK_VDD
FB12
BEAD 60 0805 1A
C545
10UF 10V 0805 Y5V
C262
10UF 10V 0805 Y5V
C263
C264
C265
C266
C267
C268
C269
0.1UF 16V X7R 0402
1- PLACE ALL THE SERIES TERMINATION RESISTORS AS CLOSE TO U800 AS POSSIBLE
2- ROUTE ALL SRCCLKTx AND SRCCLKCx AS DIFFERENT PAIR RULE
3- PUT DECOUPLING CAPS CLOSE TO U800 POWER PIN
Place R800/801 less than 500 mils away from U800
R851 less than 100 mils away from R800/801
route CPU clock as 100ohm differential pair
FB13
BEAD 60 0805 1A
CLK_VDDA
C546
1UF 16V 0805 Y5V
C271
C270
1UF 10V Y5V 0402
0.1UF 16V X7R 0402
FB14
C547
10UF 10V 0805 Y5V
CT2
100UF-S 16V 6.3X8 ELITE
C272
0.1UF 16V X7R 0402
CLK_VDDREF
FB15
C548
1UF 16V 0805 Y5V
CLK_VDD48
C273
0.1UF 16V Y5V 0402
U3A
VDDA
GNDA
VDDREF
GNDREF
VDDSATA
GNDSATA
VDD48
GND48
VDDCPU
GNDCPU
VDDHTT
GNDHTT
VDDATIG
VDDSRC1
VDDSRC2
VDDSB_SRC
GNDATIG1
GNDATIG2
GNDSRC1
GNDSRC2
GNDSB_SRC
X1
X2
RESTORE#
SMBCLK
SMBDAT
PD#
REF0/SEL_HTT66
REF1/SEL_SATA
REF2
CPUKG0T_LPRS
CPUKG0C_LPRS
CPUKG1T_LPRS
CPUKG1C_LPRS
ATIG0T_LPRS
ATIG0C_LPRS
ATIG1T_LPRS
ATIG1C_LPRS
ATIG2T_LPRS
ATIG2C_LPRS
ATIG3T_LPRS
ATIG3C_LPRS
SB_SRC0T_LPRS
SB_SRC0C_LPRS
SB_SRC1T_LPRS
SB_SRC1C_LPRS
SRC0T_LPRS
SRC0C_LPRS
SRC1T_LPRS
SRC1C_LPRS
SRC2T_LPRS
SRC2C_LPRS
SRC3T_LPRS
SRC3C_LPRS
SRC4T_LPRS
SRC4C_LPRS
SRC5T_LPRS
SRC5C_LPRS
SRC6T/SATAT_LPRS
SRC6C/SATAC_LPRS
HTT0T/66M_LPRS
HTT0C/66M_LPRS
48MHz_0
48MHz_1
GND
RTM880N-793 QFN 64P
CPU_CLKIN_R_P
CPU_CLKIN_R_N
CPU_CLK 5,7
CPU_CLK_ 5,7
NBGFX_CLKP_R
NBGFX_CLKN_R
NBSRC_CLKP 5,15
NBSRC_CLKN 5,15
GFX_CLKP 24
GFX_CLKN 24
NBGPP_CLKP_R
NBGPP_CLKN_R
NBGPP_CLKP 5,15
NBGPP_CLKN 5,15
GB_CLKP_R
GB_CLKN_R
GBE_CLKP 5,45
GBE_CLKN 5,45
NBSLINK_CLKP_R
NBSLINK_CLKN_R
SBLINK_CLKP 5,15
SBLINK_CLKN 5,15
SBSRC_CLKP_R
SBSRC_CLKN_R
SBSRC_CLKP 5,19
SBSRC_CLKN 5,19
NBHTREF_CLKP_R
NBHTREF_CLKN_R
NBHT_REFCLKP 5,15
NBHT_REFCLKN 5,15
SIO_CLOCK_R
48M_USB_R
R60 33 0402
R61 33 0402
CLK_48M_SIO 5,32
CLK_48M_USB 5,20
R589
10K 0402 /NI
Parallel Resonance Crystal
C274
22P 50V NPO 0402
Y1
14.318MHZ 16PF 20PPM
C275
22P 50V NPO 0402
43 CLK_RST#
R58
22 0402
CLK_VDD
R59
4.7K 0402 /NI
11,12,20,41 SCLK
11,12,20,41 SDATA
CLK_VDD
R62
1K 0402
R66
8.2K 0402
R67
8.2K 0402
COMMON
5,15 OSC_14M_NB
R68
150 1% 0402
R69
90.9 1% 0402
Clock chip has internal serial terminations for differencial pairs, external resistors are reserved for debug purpose.
SEL_HTT66
1 66MHz 3.3V single ended HTT clock
0* 100MHz differential HTT clock
SEL_SATA
1 100MHz non-spreading differential SATA clock
0* 100MHz differential spreading SRC clock
* default
映泰股份有限公司
BIOSTAR GROUP
Title
CLOCK GEN
Size B
Document Number
A88PE-M3T
Rev 6.0
Date: Monday, June 28, 2010
Sheet 18 of 47

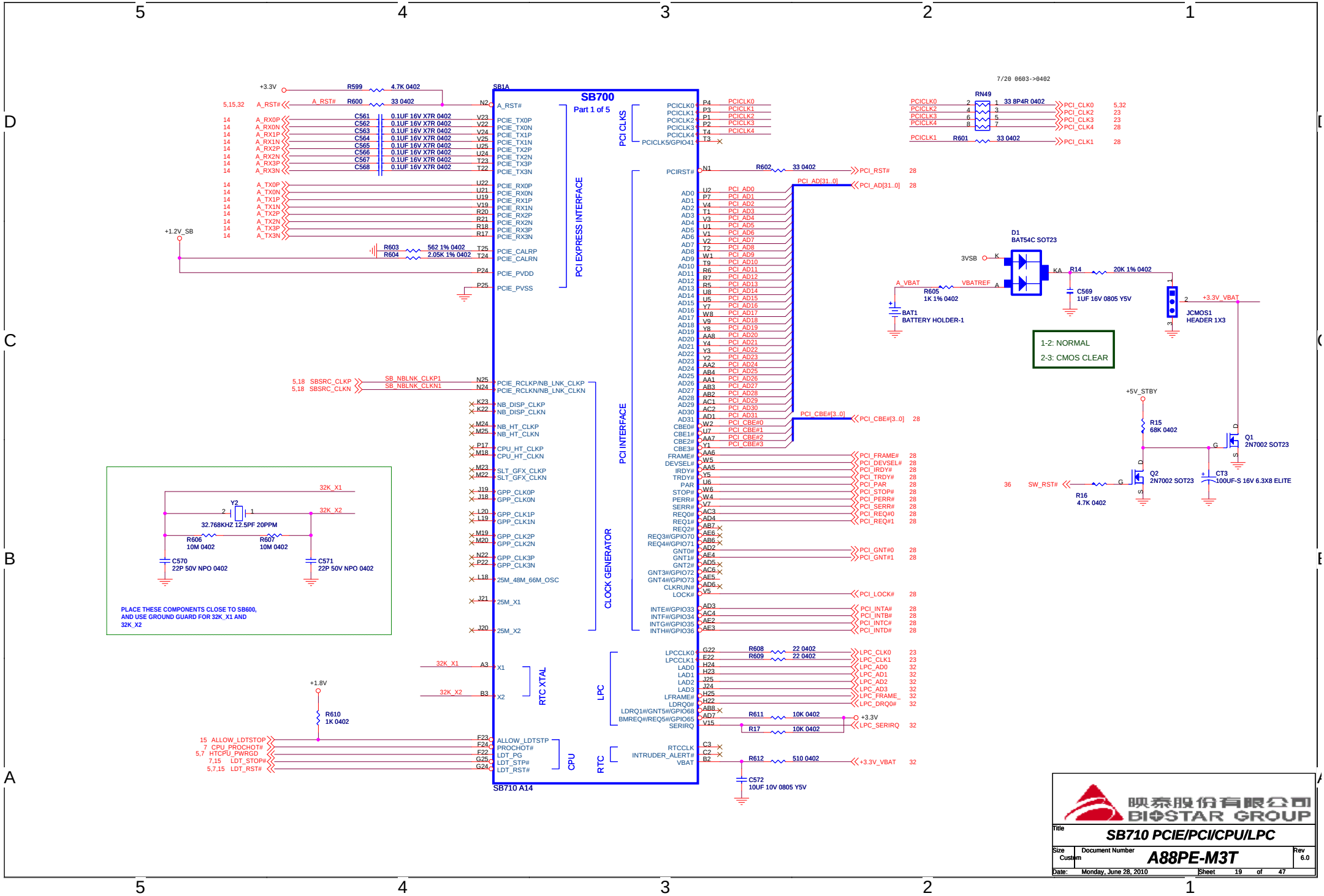
SB700
Part 1 of 5
SB1A
SB710 A14
PCI EXPRESS INTERFACE
PCI CLKS
PCI INTERFACE
CLOCK GENERATOR
RTC XTAL
LPC
CPU
RTC
PCI_AD[31..0]
PCI_CBE#[3..0]
PCI_RST#
PCI_CLK0
PCI_CLK1
PCI_CLK2
PCI_CLK3
PCI_CLK4
PCI_CLK5/GPIO41
PCI_FRAME#
PCI_DEVSEL#
PCI_IRDY#
PCI_TRDY#
PCI_PAR
PCI_STOP#
PCI_PERR#
PCI_SERR#
PCI_REQ#0
PCI_REQ#1
PCI_GNT#0
PCI_GNT#1
PCI_LOCK#
PCI_INTA#
PCI_INTB#
PCI_INTC#
PCI_INTD#
LPC_CLK0
LPC_CLK1
LPC_AD0
LPC_AD1
LPC_AD2
LPC_AD3
LPC_FRAME_
LPC_DRQ0#
LPC_SERIRQ
+3.3V_VBAT
+5V_STBY
+1.2V_SB
+1.8V
+3.3V
32K_X1
32K_X2
Y2
32.768KHZ 12.5PF 20PPM
R606 10M 0402
R607 10M 0402
C570 22P 50V NPO 0402
C571 22P 50V NPO 0402
PLACE THESE COMPONENTS CLOSE TO SB600, AND USE GROUND GUARD FOR 32K_X1 AND 32K_X2
R599 4.7K 0402
R600 33 0402
R603 562 1% 0402
R604 2.05K 1% 0402
R602 33 0402
R608 22 0402
R609 22 0402
R611 10K 0402
R17 10K 0402
R612 510 0402
C572 10UF 10V 0805 Y5V
R610 1K 0402
RN49
33 8P4R 0402
R601 33 0402
7/20 0603->0402
D1 BAT54C SOT23
R14 20K 1% 0402
C569 1UF 16V 0805 Y5V
R605 1K 1% 0402
BAT1 BATTERY HOLDER-1
JCMOS1 HEADER 1X3
1-2: NORMAL
2-3: CMOS CLEAR
R15 68K 0402
Q1 2N7002 SOT23
Q2 2N7002 SOT23
CT3 100UF-S 16V 6.3X8 ELITE
R16 4.7K 0402
SW_RST#
BIOSTAR GROUP
Title
SB710 PCIE/PCI/CPU/LPC
Size Custom
Document Number
A88PE-M3T
Rev 6.0
Date: Monday, June 28, 2010
Sheet 19 of 47

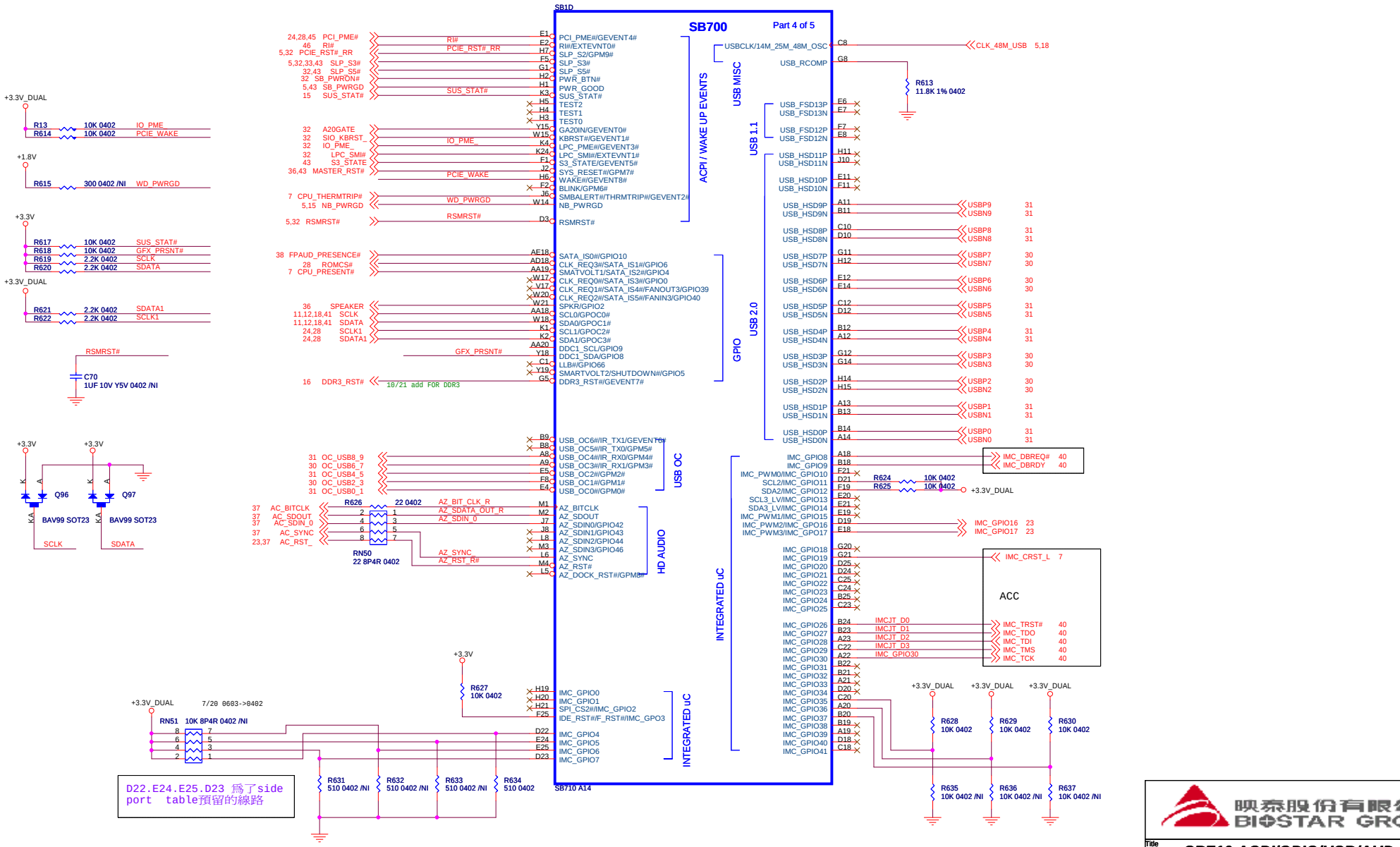

Title	SB710 ACPI/GPIO/USB/AUD
Size	Custom
Document Number	A88PE-M3T
Rev	6.0
Date:	Monday, June 28, 2010
Sheet	20 of 47

映泰股份有限公司 BIOSTAR GROUP

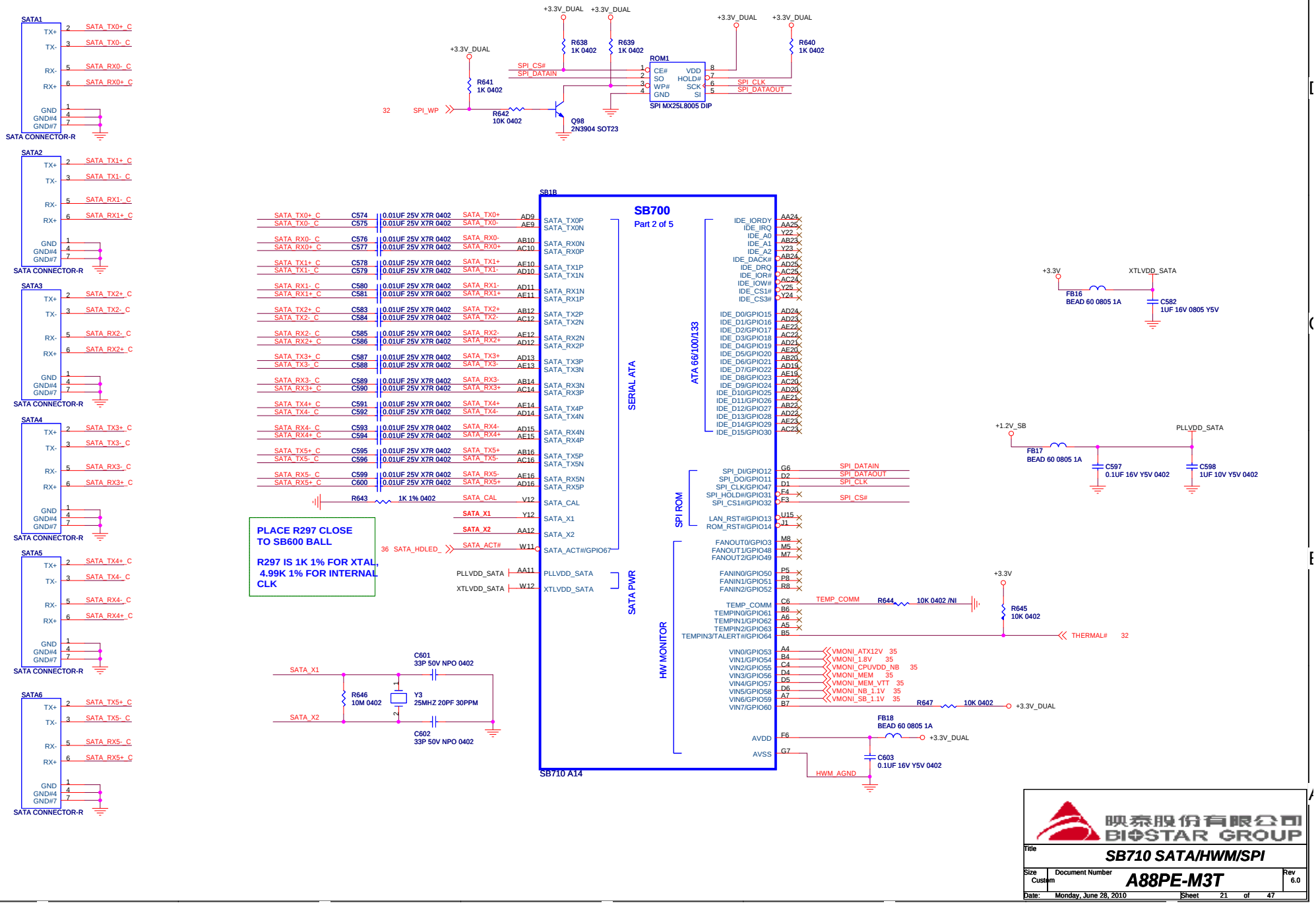
SATA1
SATA2
SATA3
SATA4
SATA5
SATA6
SATA CONNECTOR-R
ROM1
SPI MX25L8005 DIP
R638 1K 0402
R639 1K 0402
R640 1K 0402
R641 1K 0402
R642 10K 0402
Q98 2N3904 SOT23
SB1B
SB700
Part 2 of 5
SERIAL ATA
ATA 66/100/133
SPI ROM
HW MONITOR
SATA PWR
SB710 A14
PLACE R297 CLOSE TO SB600 BALL
R297 IS 1K 1% FOR XTAL, 4.99K 1% FOR INTERNAL CLK
R643 1K 1% 0402
C601 33P 50V NPO 0402
C602 33P 50V NPO 0402
R646 10M 0402
Y3 25MHZ 20PF 30PPM
FB16 BEAD 60 0805 1A
C582 1UF 16V 0805 Y5V
FB17 BEAD 60 0805 1A
C597 0.1UF 16V Y5V 0402
C598 1UF 10V Y5V 0402
R644 10K 0402 /NI
R645 10K 0402
R647 10K 0402
FB18 BEAD 60 0805 1A
C603 0.1UF 16V Y5V 0402
映泰股份有限公司
BIOSTAR GROUP
SB710 SATA/HWM/SPI
A88PE-M3T
Rev 6.0
Monday, June 28, 2010
Sheet 21 of 47

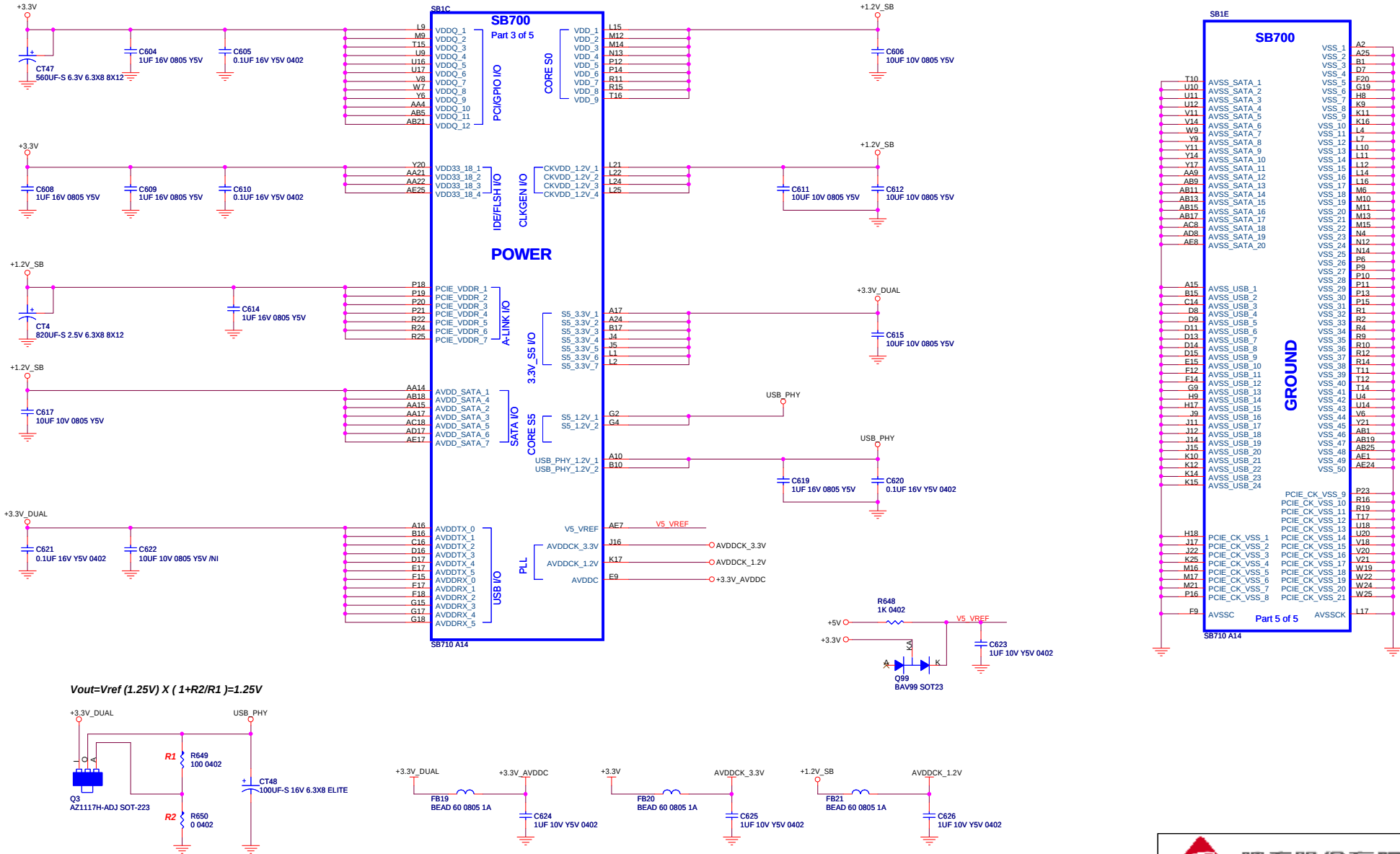

Title	SB710 POWER		
Size: Custom	Document Number: A88PE-M3T		Rev: 6.0
Date: Monday, June 28, 2010	Sheet 22 of 47		

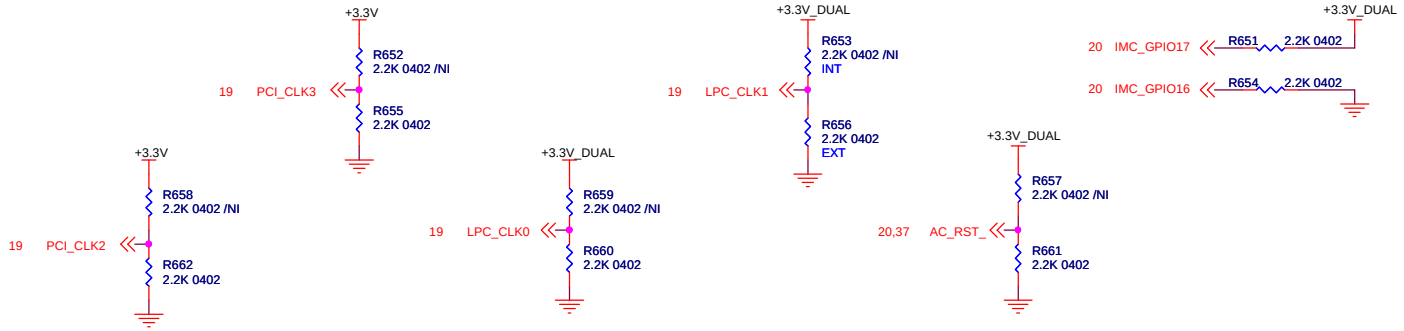

REQUIRED STRAPS

NOTE: SB700 HAS INTERNAL 15K PULL UP RESISTOR FOR RTC_CLK

	PCI_CLK2	PCI_CLK3	PCI_CLK4	PCI_CLK5	LPC_CLK0	LPC_CLK1	AZ_RST#	IMC_GPIO17 IMC_GPIO16
PULL HIGH	WATCHDOG TIMER ON NB_PWRGD ENABLED	USE DEBUG STRAPS	RESERVED	RESERVED	IMC ENABLED ADO Extreme	CLKGEN ENABLED	IMC ENABLED	ROM TYPE: H, L = SPI ROM DEFAULT
PULL LOW	WATCHDOG TIMER ON NB_PWRGD DISABLED DEFAULT	IGNORE DEBUG STRAPS DEFAULT			IMC DISABLED DEFAULT	CLKGEN DISABLED DEFAULT	IMC DISABLED DEFAULT	

映泰股份有限公司 BIOSTAR GROUP

Title: SB710 STRAP

Size: B | Document Number: A88PE-M3T | Rev: 6.0

Date: Monday, June 28, 2010 | Sheet 23 of 47

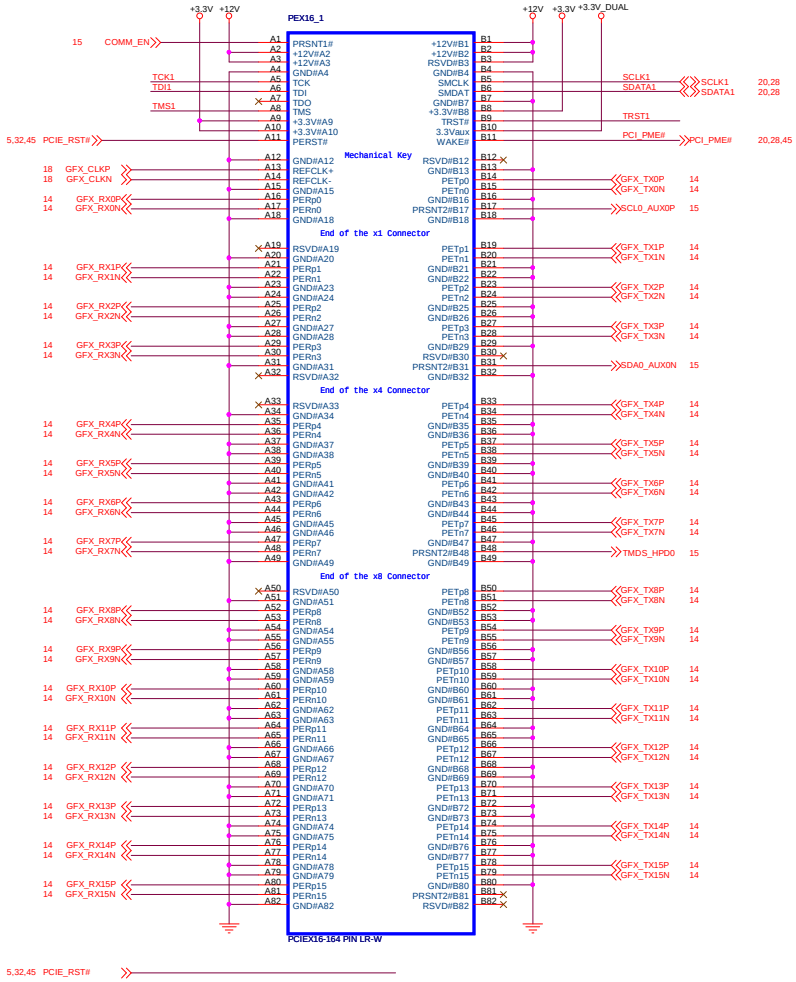



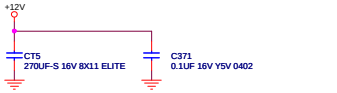

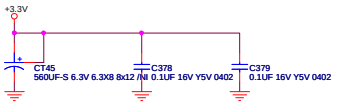

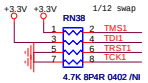

Title	PCI-E SLOT	
Size C	Document Number A88PE-M3T	Rev 6.0
Date: Monday, June 28, 2010	Sheet 24 of 47	

PLACE L2, L4, L6
90 DEGREE FROM
EACH OTHER

R96-R98 EITHER CLOSE TO NB OR
CRT CONNECTOR, THE TRACE IMPEDANCE
BETWEEN TWO 150R RESISTORS SHOULD BE
50R+/-15%, THE TRACE IMPEDANCE BETWEEN
150R RESISTOR AND CONNECTOR SHOULD BE
75R+/-15%

+5V_CON
+5V FS1 1 2 POLY FUSE 1.1A

15 DAC_RED
15 DAC_GREEN
15 DAC_BLUE
L4 INDUCTOR 68NH 300MA 0805
L5 INDUCTOR 68NH 300MA 0805
L6 INDUCTOR 68NH 300MA 0805
R_FILTER
G_FILTER
B_FILTER

+5V
R125 4.7K 0402
15 DAC_SDA
R121 33 0402
VGA_SDATA

R122 33 0402
VGA_SCLK

R123 27 0402
R124 27 0402
VGA_HSYNC
VGA_VSYNC
VGA_PWR

R127 150 1% 0402
R126 150 1% 0402
R128 140 1% 0402

C382
C387
C391
5P 50V NPO 0402
5P 50V NPO 0402
5P 50V NPO 0402

C384 22P 50V NPO 0402
C388 22P 50V NPO 0402
C392 22P 50V NPO 0402

C380 100P 50V NPO 0402 /NI
C385 100P 50V NPO 0402 /NI
C389 100P 50V NPO 0402 /NI
C393 100P 50V NPO 0402 /NI

C383 0.1UF 16V Y5V 0402

+5V
R130 4.7K 0402
15 DAC_SCL

+5V C395 0.1UF 16V Y5V 0402

U6A SN74ACT08
15 HSYNC#

U6B SN74ACT08
15 VSYNC#

1/14
R131 0 0805
IO_GND

R132 0 0805
1/12
IO_GND

SQ10
VGA_VSYNC
VGA_HSYNC
VGA_SDATA
+3.3V
VGA_SCLK
CM1293 SOT23-6

SQ11
R_FILTER
G_FILTER
+3.3V
B_FILTER
CM1293 SOT23-6

12/22
VGA1A
VGA CONNECTOR
R_FILTER
G_FILTER
VGA_SDATA
B_FILTER
VGA_HSYNC
VGA PWR
+5V_CON
VGA_VSYNC
VGA_SCLK
VGA CONN PC99 SHORT
IO_GND

映泰股份有限公司
BIOSTAR GROUP

Title	VGA	
Size: Custom	Document Number: A88PE-M3T	Rev: 6.0
Date: Monday, June 28, 2010	Sheet 25 of 47	

SHARE COMMON PADS
AVIOD STUB

15 TMDS_00N → TMDS_00N_DVI, TMDS_00N_DMI
15 TMDS_00P → TMDS_00P_DVI, TMDS_00P_DMI
15 TMDS_01N → TMDS_01N_DVI, TMDS_01N_DMI
15 TMDS_01P → TMDS_01P_DVI, TMDS_01P_DMI
15 TMDS_02N → TMDS_02N_DVI, TMDS_02N_DMI
15 TMDS_02P → TMDS_02P_DVI, TMDS_02P_DMI
15 TMDS_CLKN → TMDS_CLKN_DVI, TMDS_CLKN_DMI
15 TMDS_CLKP → TMDS_CLKP_DVI, TMDS_CLKP_DMI

DVI1

R272 110 1% 0402 TMDS_00N_DVI
TMDS_00P_DVI
R273 110 1% 0402 TMDS_02N_DVI, TMDS_01N_DVI
R274 110 1% 0402 TMDS_02P_DVI, TMDS_01P_DVI

15 TMDS_12N
15 TMDS_12P
TMDS_11N 15
TMDS_10N 15
TMDS_11P 15
TMDS_10P 15

R279 110 1% 0402 TMDS_CLKP_DVI
TMDS_CLKN_DVI
DDC_CLK_CON
+5V_DVI
DDC_DATA_CON
+5V_CON

C3, C5A, C4
C1, C5, C2
R137 200K 0402 TMDS_HPD_CON
R587 200K 0402
C396 0.1UF 16V Y5V 0402

DVI-I
25, 26
IO_GND

SQ12
CM1293 SOT23-6
B1, B2, A1, A2
6 DDC_DATA_CON
5 +5V
4 DDC_CLK_CON

+5V
R138 4.7K 0402
R141 4.7K 0402
15 I2C_CLK DDC_CLK_CON
15 I2C_DATA DDC_DATA_CON

HDMI
IO_GND
HDMI HDMI1
GND#G1, GND#G2, GND#G3, GND#G4
G1, G2, G3, G4
DIP HDMI CONN

TMDS_02P_DMI
TMDS_02N_DMI
TMDS_01P_DMI
TMDS_01N_DMI
TMDS_00P_DMI
TMDS_00N_DMI
TMDS_CLKP_DMI
TMDS_CLKN_DMI
DDC_CLK_CON
DDC_DATA_CON
I2C_CLK_HDMI
I2C_DATA_HDMI
+5V_HDMI
TMDS_HPD_HDMI

+3.3V
Q14 2N3904 SOT23
TMDS_HPD_CON
+5V_CON
R280 200K 0402
R588 200K 0402
C460 0.1UF 16V Y5V 0402
15 TMDS_HPD2
R146 33 0402
R147 10K 0402

TMDS_00P_DMI R374 110 1% 0402 TMDS_00N_DMI
TMDS_01P_DMI R375 110 1% 0402 TMDS_01N_DMI
TMDS_02P_DMI R376 110 1% 0402 TMDS_02N_DMI
TMDS_CLKP_DMI R377 110 1% 0402 TMDS_CLKN_DMI

映泰股份有限公司
BIOSTAR GROUP

Title: DVI & HDMI
Size: B
Document Number: A88PE-M3T
Rev: 6.0
Date: Monday, June 28, 2010
Sheet 26 of 47

映泰股份有限公司
BIOSTAR GROUP

Title: PCIEX1 SLOT 1

Size	Document Number	Rev
B	A88PE-M3T	6.0

Date: Monday, June 28, 2010 Sheet 27 of 47

IDSEL:AD21 , INT:ABCD , REQ0 & GNT0 , PCI_CLK1

PCI_SLOT 1

PCI1

PCI-120 PIN-R

IDSEL:AD22 , INT:BCDA , REQ1 & GNT1 , PCI_CLK4

PCI_SLOT 2

PCI2

PCI-120 PIN-R

1/11 SRN23=>4 0402

R164 4.7K 0402 PCI_TRST#
R165 4.7K 0402 PCI_TCK
R166 4.7K 0402 PCI_TMS
R167 4.7K 0402 PCI_TDI

IDSEL_0 R161 100 0402 PCI_AD21

PRSNT1#1 C400 0.1UF 16V Y5V 0402
PRSNT1#2 C402 0.1UF 16V Y5V 0402
C540 0.1UF 16V Y5V 0402

RN24
PU2_R64J
PU2_A64J
PU1_R64J
PU1_A64J
8.2K 8P4R 0402

PCI PULL UPS

PCI_REQ#1 R162 4.7K 0402 /NI
PCI_REQ#0 R163 4.7K 0402 /NI

1/7

IDSEL_1 R160 100 0402 PCI_AD22

PRSNT2#1 C399 0.1UF 16V Y5V 0402
PRSNT2#2 C401 0.1UF 16V Y5V 0402
C541 0.1UF 16V Y5V 0402
PCI_RST# C627 0.1UF 16V Y5V 0402 /NI

映泰股份有限公司 BIOSTAR GROUP

Title	PCI SLOT		
Size: Custom	Document Number: A88PE-M3T		Rev: 6.0
Date: Monday, June 28, 2010	Sheet 28 of 47		

映泰股份有限公司
BIOSTAR GROUP

Title	PEX IDE ATA 133-VT6415	
Size: Custom	Document Number: A88PE-M3T	Rev: 6.0
Date: Monday, June 28, 2010	Sheet 29 of 47	

BACK PANEL USB

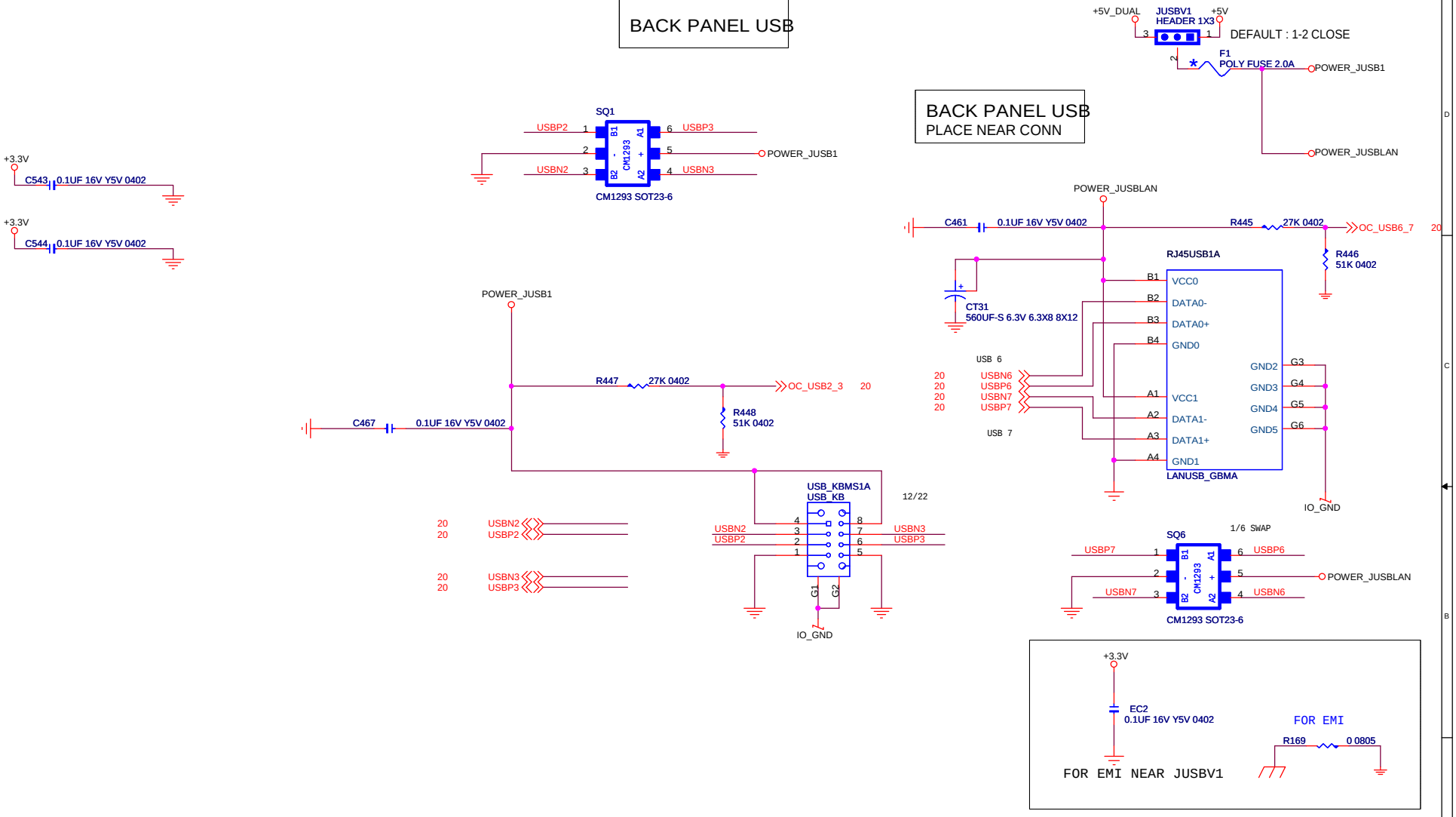

Title	USB CONN	
Size: B	Document Number: A88PE-M3T	Rev: 6.0
Date: Monday, June 28, 2010	Sheet 30 of 47	

FRONT PANEL USB

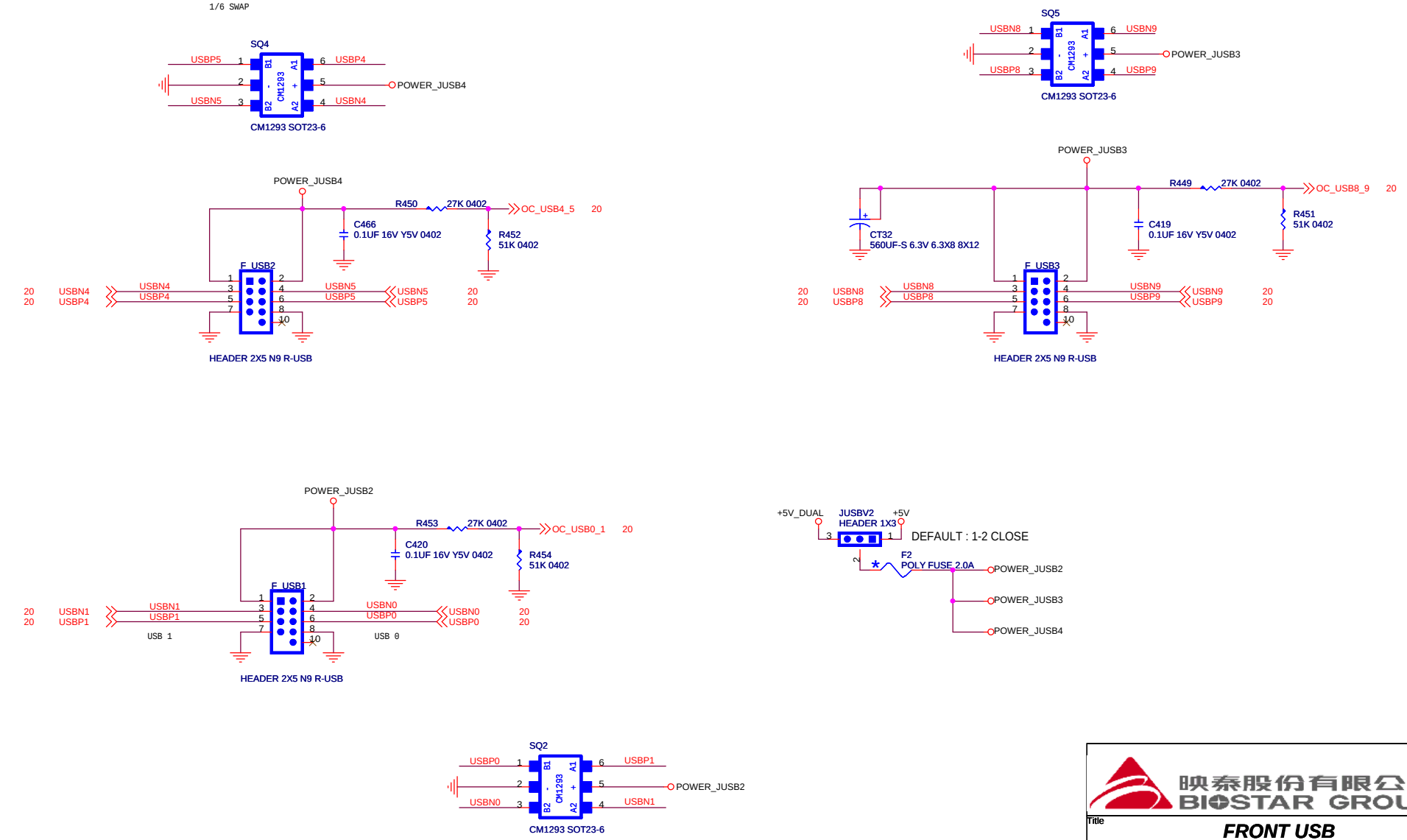

映泰股份有限公司
BIOSTAR GROUP

Title	FRONT USB	
Size: B	Document Number: A88PE-M3T	Rev: 6.0
Date: Monday, June 28, 2010	Sheet 31 of 47	

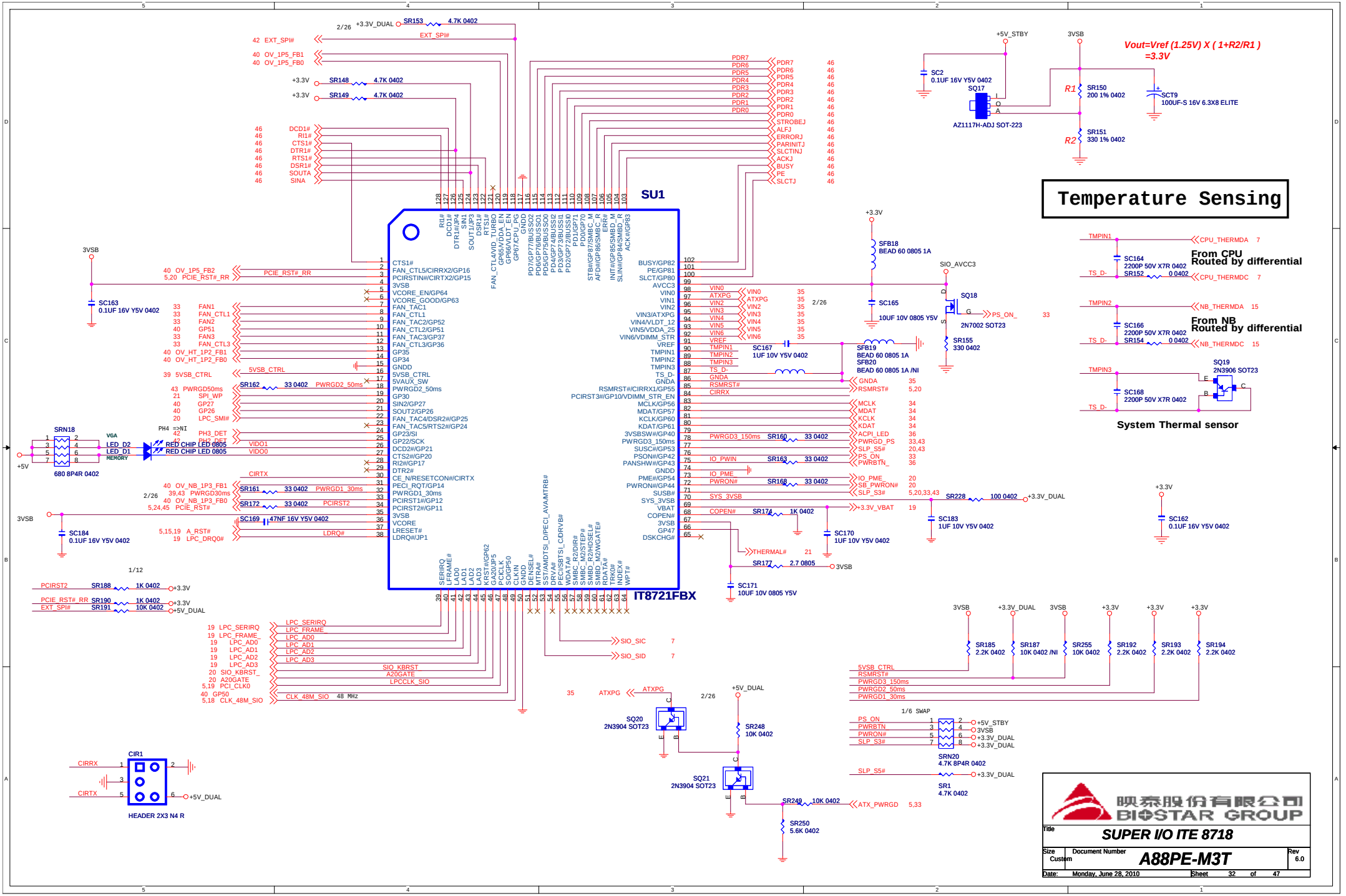
Temperature Sensing
SU1
IT8721FBX
Vout=Vref (1.25V) X (1+R2/R1)
=3.3V
AZ1117H-ADJ SOT-223
From CPU
Routed by differential
From NB
Routed by differential
System Thermal sensor
HEADER 2X3 N4 R
BIOSTAR GROUP
SUPER I/O ITE 8718
A88PE-M3T
Monday, June 28, 2010

POWER CONNECTOR

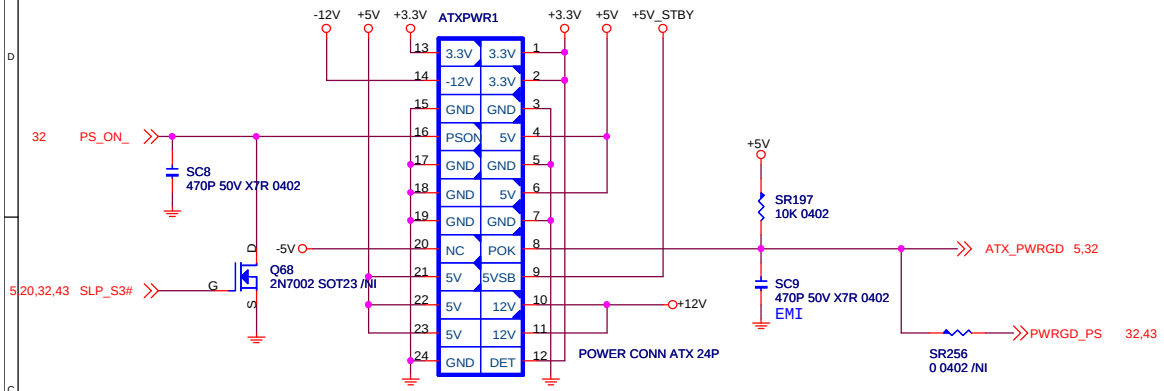

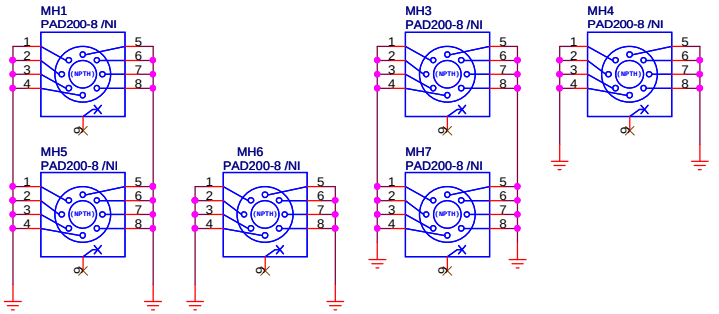

EMI POWER CONN DECOUPING

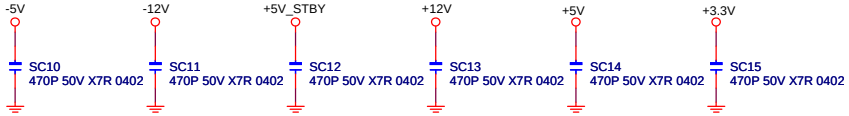

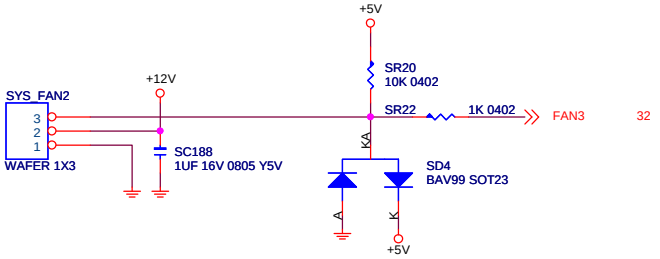

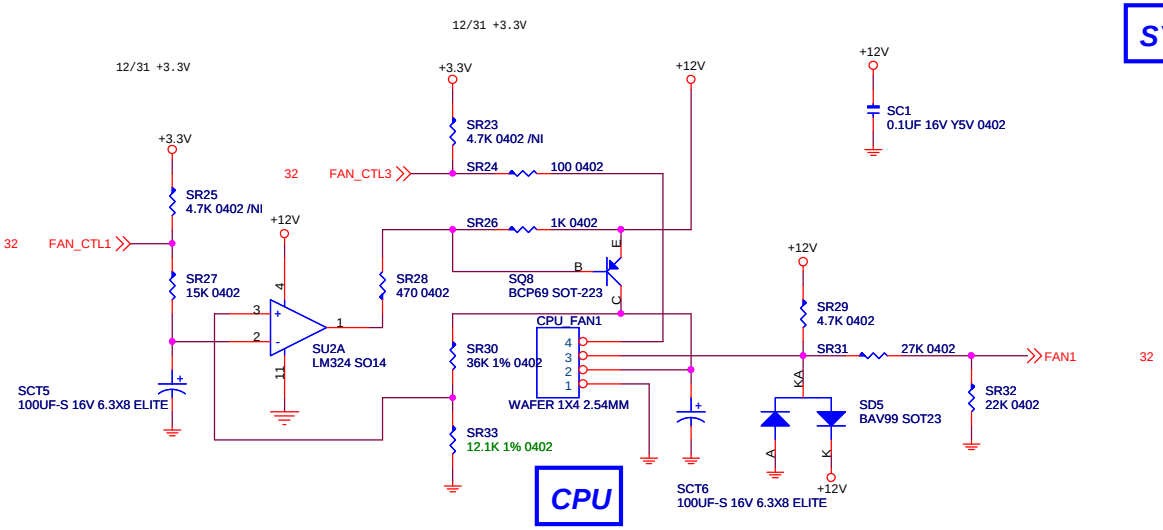

SYSTEM

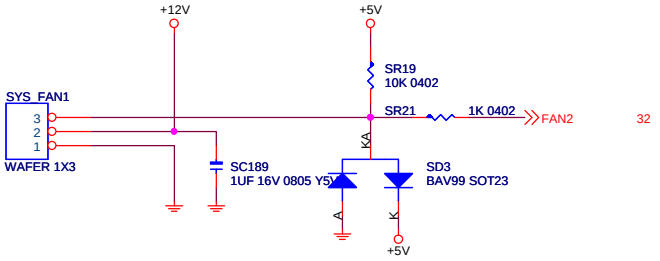

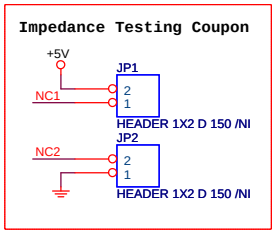

映泰股份有限公司
BIOSTAR GROUP

Title	FAN&POWER CONN		
Size: Custom	Document Number: A88PE-M3T		Rev: 6.0
Date: Monday, June 28, 2010	Sheet 33 of 47		

映泰股份有限公司
BIOSTAR GROUP

FOR KEYBOARD WITH MOUSE CONN.

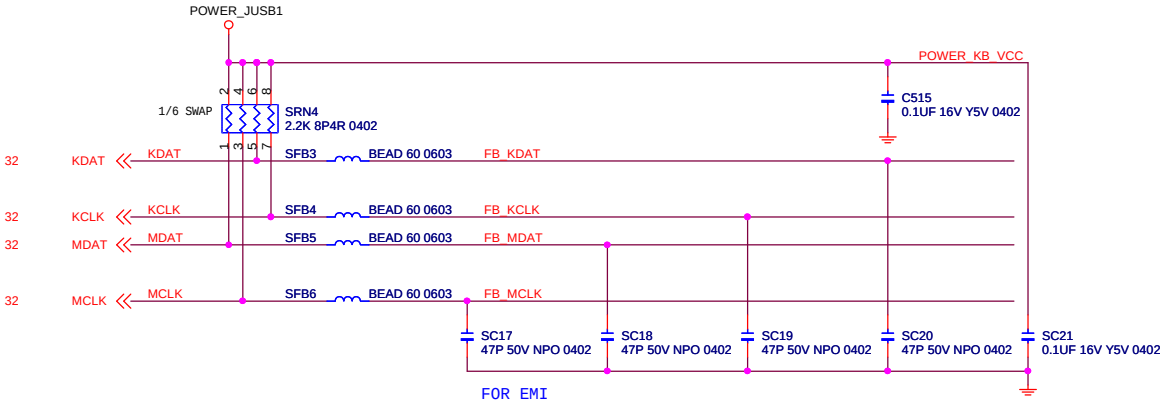

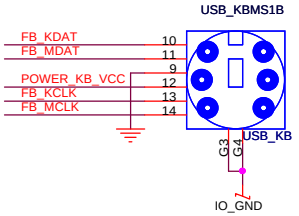

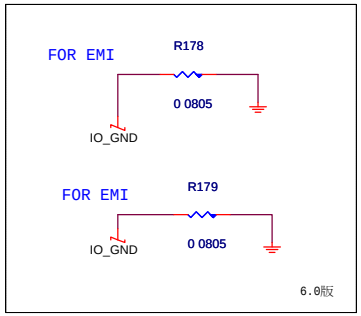

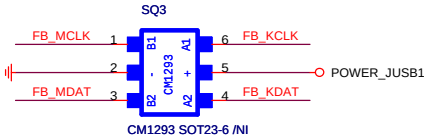

映泰股份有限公司 BIOSTAR GROUP		
Title: PS2 CONN		
Size: B	Document Number: A88PE-M3T	Rev: 6.0
Date: Monday, June 28, 2010	Sheet 34 of 47	

hardware monitor

Voltage Sensing

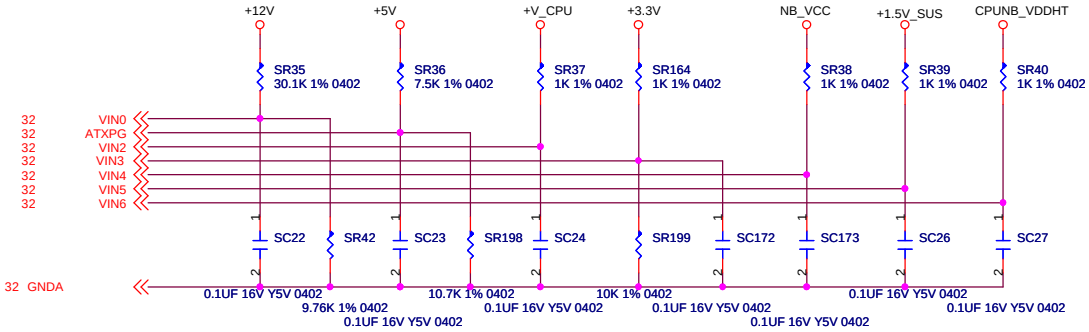

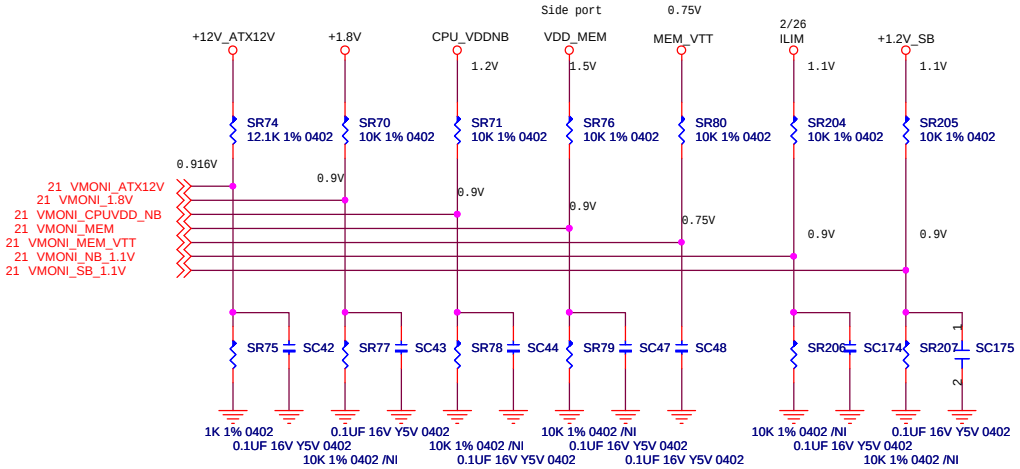

映泰股份有限公司
BIOSTAR GROUP

Title	H/W MONITOR	
Size: Custom	Document Number: A88PE-M3T	Rev: 6.0
Date: Monday, June 28, 2010	Sheet 35 of 47	

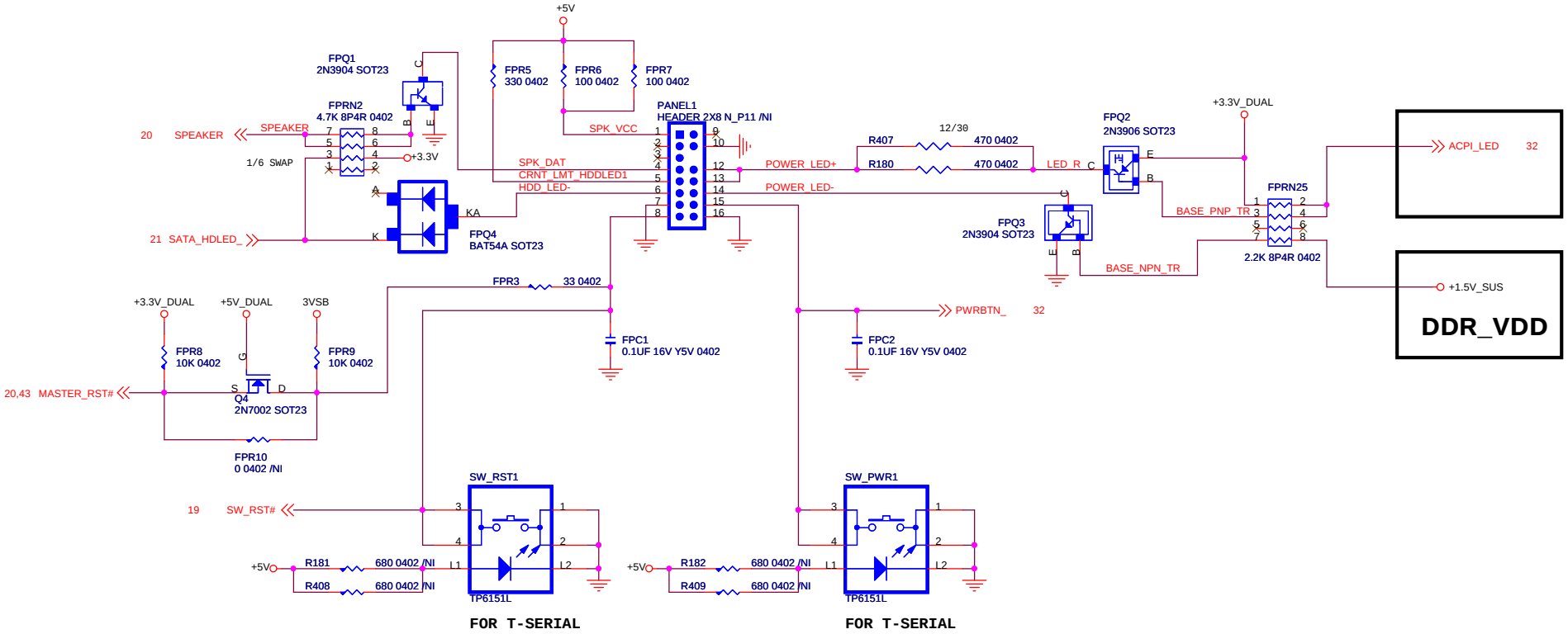

LED_D2	LED_D1	MESSAGE
OFF	OFF	ABNORMAL
OFF	ON	MEMORY ERROR
ON	OFF	VGA ERROR
ON	ON	NORMAL

映泰股份有限公司
BIOSTAR GROUP

Title: FRONT PANEL/LED

Size: Custom | Document Number: A88PE-M3T | Rev: 6.0

Date: Monday, June 28, 2010 | Sheet 36 of 47

7.1 Speaker Configuration

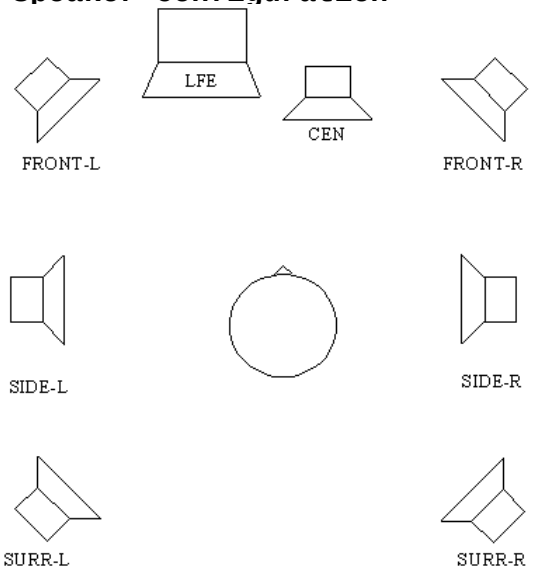

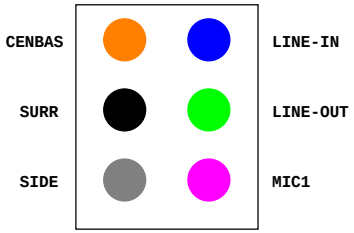

Configuration

	PORT-A	PORT-B	PORT-C	PORT-D	PORT-E	PORT-F	PORT-G	PORT-H
Function	SURR	MIC1	LINE1	LINEOUT	LINE2	MIC2	CEN/LFE	SIDE
Location	Rear	Rear	Rear	Rear	Front	Front	Rear	Rear

Title	EUP POWER
Size B / Document Number	A88PE-M3T / Rev 6.0
Date: Monday, June 28, 2010	Sheet 37 of 47

Rear Panel Onboard Analog I/O
P07 : 3-Port & 6-Port Co-lay

ALC883/888:B,C,E,F ports support I/P & O/P function.

But A,D,G,H ports not support MIC function.

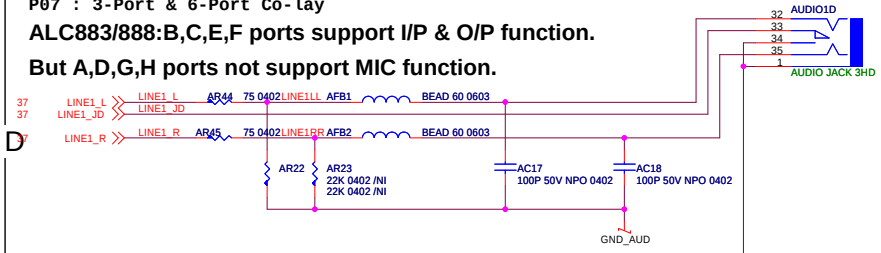

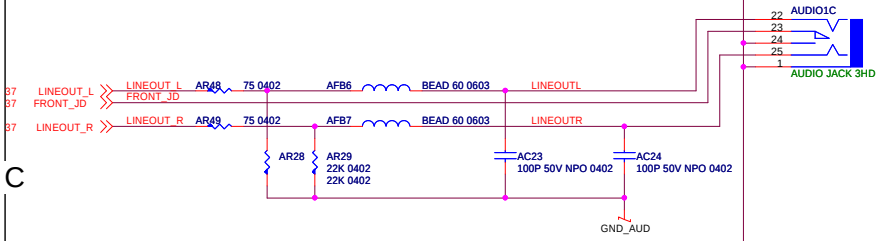

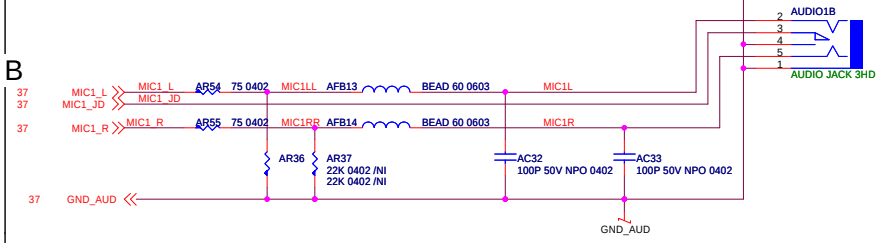

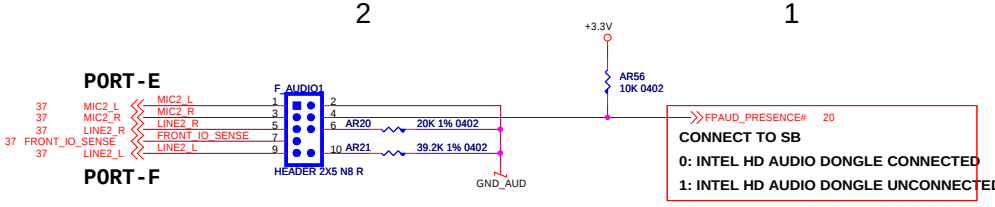



AUDIO ANALOG POWER
892-->/NI
888-->ADD

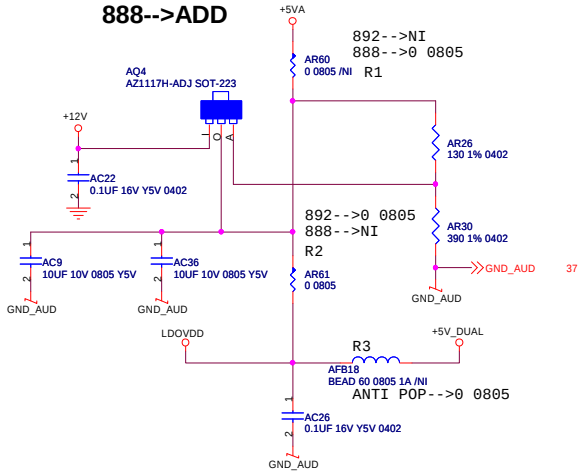

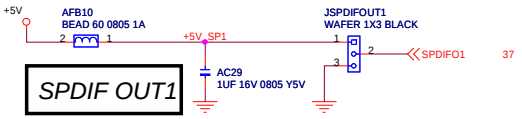

V0.51 Add EMI component CM1293 SOT23-6

	ALC883/8	ALC861VD
HDA Iterface	Yes	Yes
DAC	5 DAC	4 DAC
	7.1Ch + 2 Ch	7.1Ch
DAC SNR	95dB	90dB
GPIO for Vref	None	None
SPDIF-I	Yes	No
SPDIF-O	Yes	Yes
Re-Tasking	4-PORTS	Port D,E,F

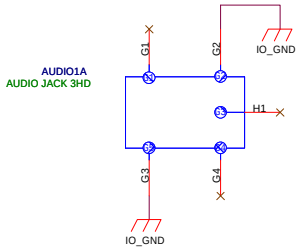

FOR EMI

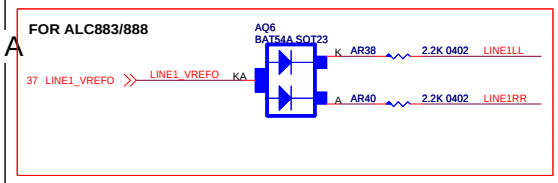

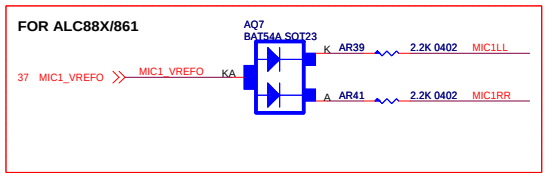

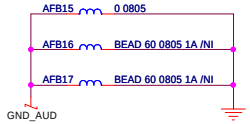

映泰股份有限公司
BIOSTAR GROUP

Title: **EUP POWER**

Size	Document Number	Rev
Custom	A88PE-M3T	6.0

Date: Monday, June 28, 2010 Sheet 38 of 47

Energy-Using Product(EUP)

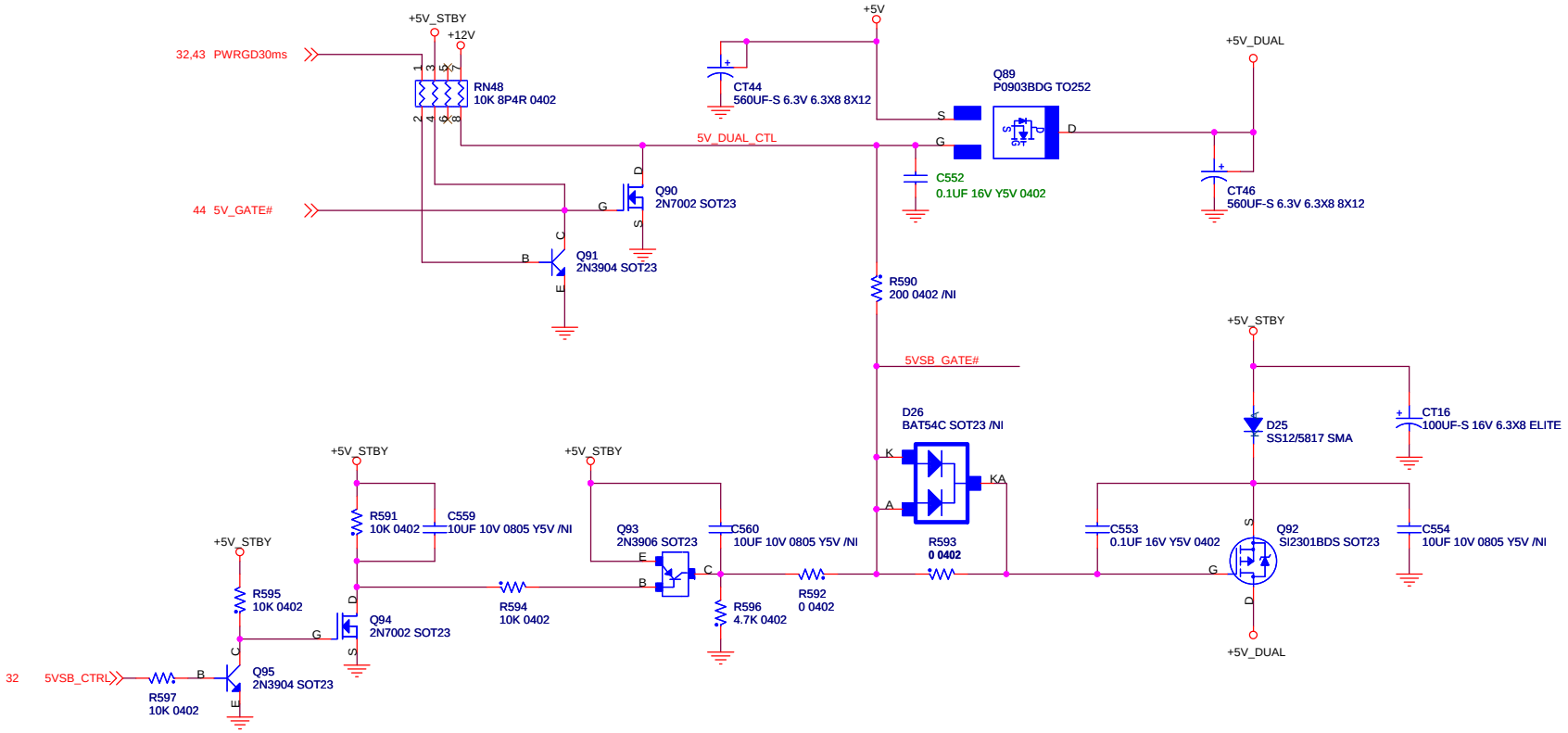

Title	EUP POWER	
Size: B	Document Number: A88PE-M3T	Rev: 6.0
Date: Monday, June 28, 2010	Sheet 39 of 47	

映泰股份有限公司 BIOSTAR GROUP

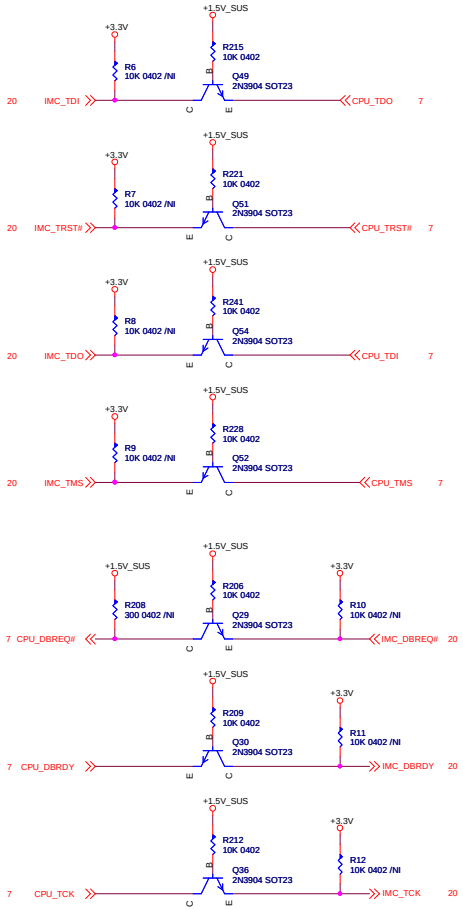

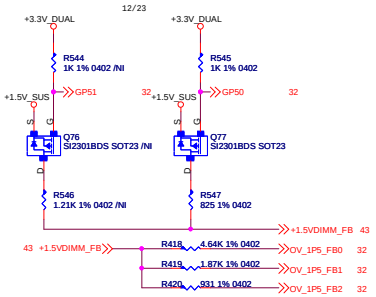

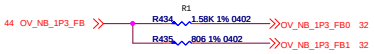

NB_VCC-->1.2V R1-->1.58K R2-->806
NB_VCC-->1.3V R1-->2K R2-->931



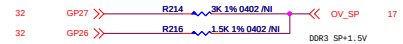

+1.5VDIMM_FB	VDIMM0	VDIMM1	VDIMM2
Default 1.509V	1	1	1
1.547V	0	1	1
1.605V	1	0	1
1.644V	0	0	1
1.703V	1	1	0
1.742V	0	1	0
1.799V	1	0	0
1.838V	0	0	0

+1.5VDIMM_FB	GP51	GP50
1.353V	0	0
1.397V	0	1
1.447V	1	0
Default 1.509V	1	1

	OV_NB_1P1_FB0	OV_NB_1P1_FB1
+1.2V / +1.296V	1	1
+1.250V / +1.346V	0	1
+1.299V / +1.403V	1	0
+1.349V / +1.452V	0	0

	OV_SB_1P1_FB0	OV_SB_1P1_FB1
+1.204V	1	1
+1.246V	0	1
+1.284V	1	0
+1.324V	0	0

SIDEPORT	GP27	GP26
Default 1.51V	1	1
1.55V	0	1
1.6V	1	0
1.65V	0	0

映泰股份有限公司
BIOSTAR GROUP

Title: OVER VOLTAGE/ACC FUNCTION

Size: C | Document Number: A88PE-M3T | Rev: 6.0

Date: Monday, June 28, 2010 | Sheet 40 of 47

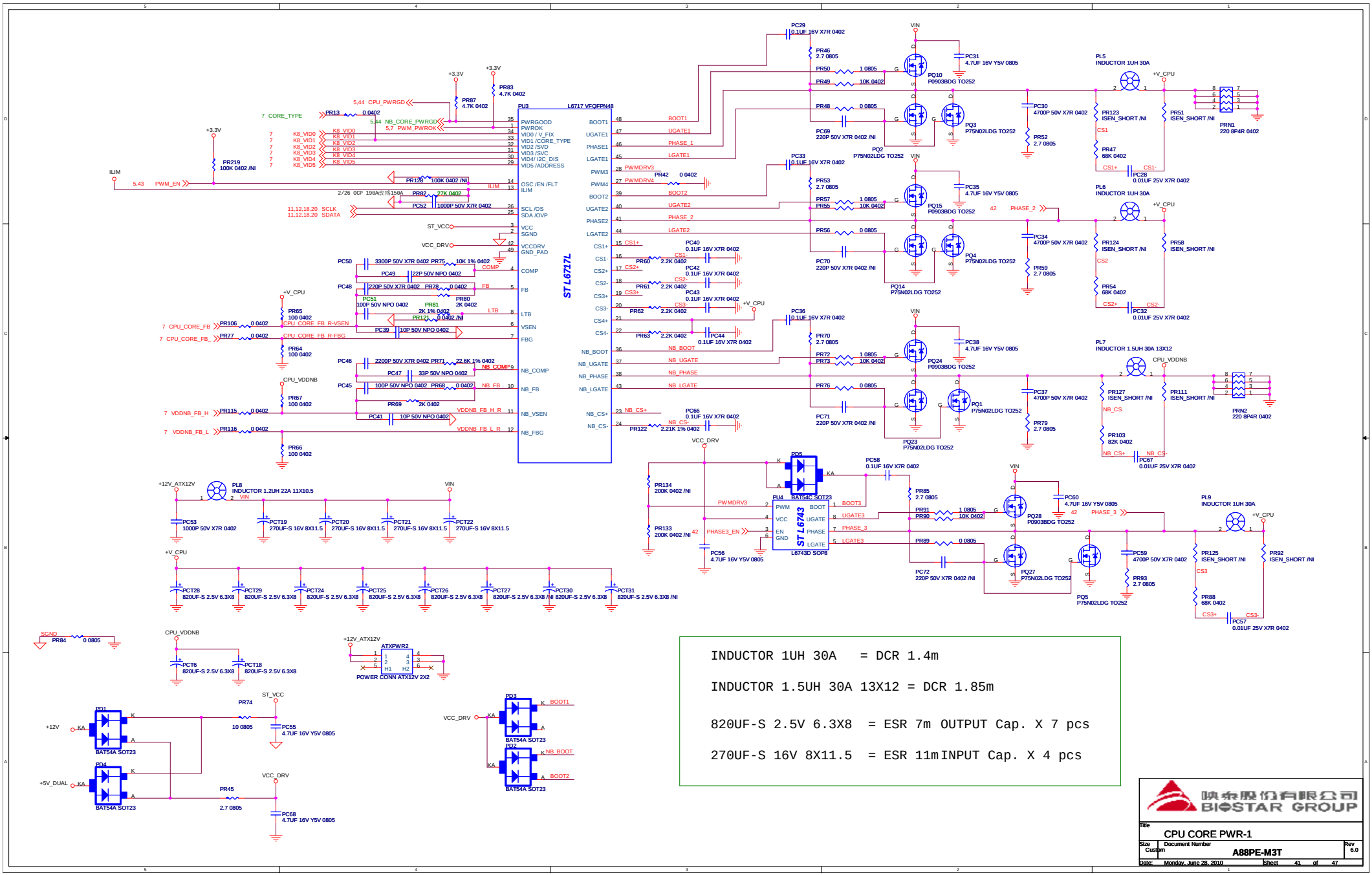
ST L6717L
L6717 VFQFPN48
PU3
ST L6743
L6743D SOP8
PU4
INDUCTOR 1UH 30A
INDUCTOR 1.5UH 30A 13X12
INDUCTOR 1.2UH 22A 11X10.5
BAT54A SOT23
BAT54C SOT23
POWER CONN ATX12V 2X2
INDUCTOR 1UH 30A = DCR 1.4m
INDUCTOR 1.5UH 30A 13X12 = DCR 1.85m
820UF-S 2.5V 6.3X8 = ESR 7m OUTPUT Cap. X 7 pcs
270UF-S 16V 8X11.5 = ESR 11mINPUT Cap. X 4 pcs
CPU CORE PWR-1
A88PE-M3T
Monday, June 28, 2010
41 of 47

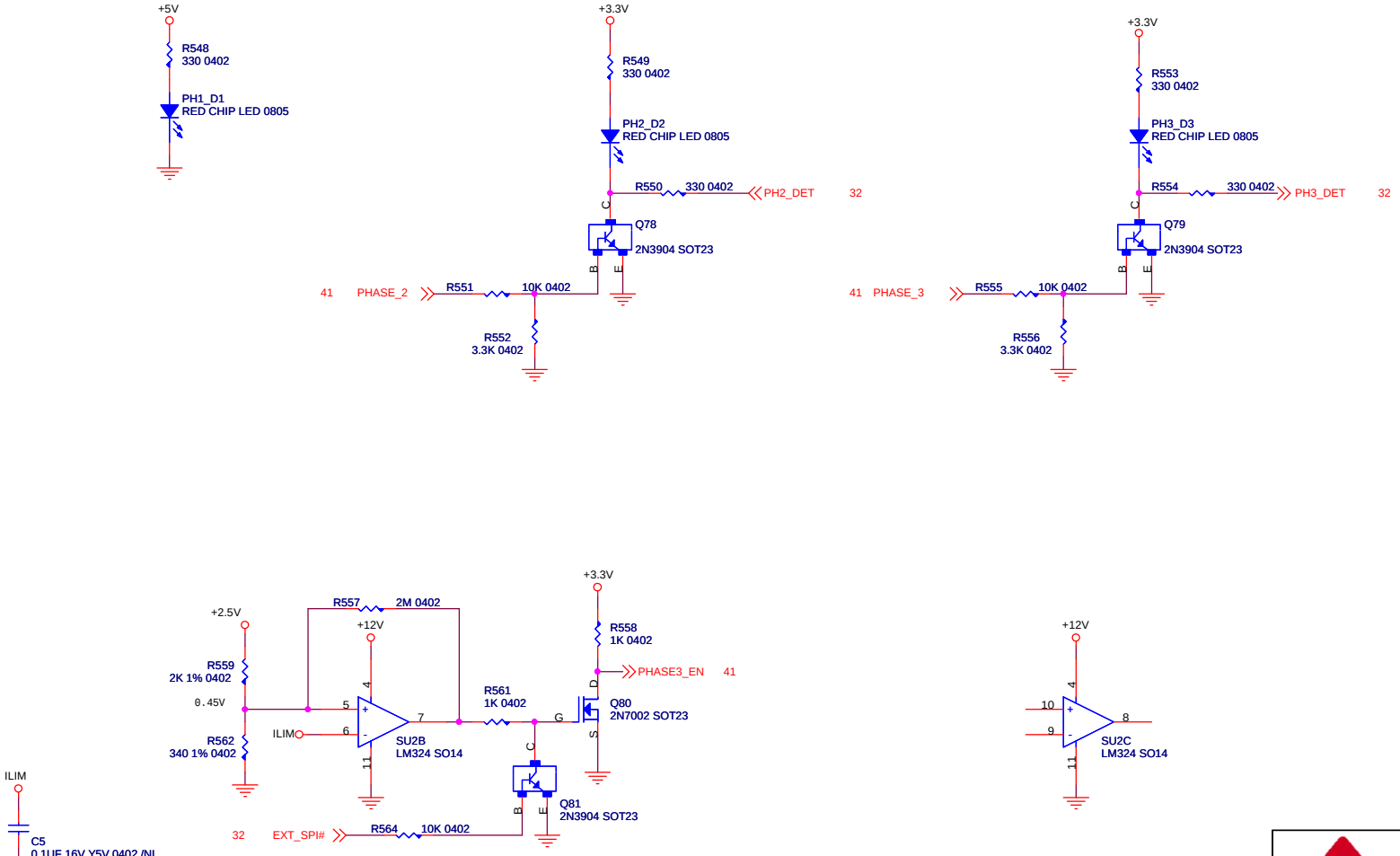

映泰股份有限公司
BIOSTAR GROUP

Title	CPU CORE PWR-2	
Size B	Document Number A88PE-M3T	Rev 6.0
Date: Monday, June 28, 2010	Sheet 42 of 47	

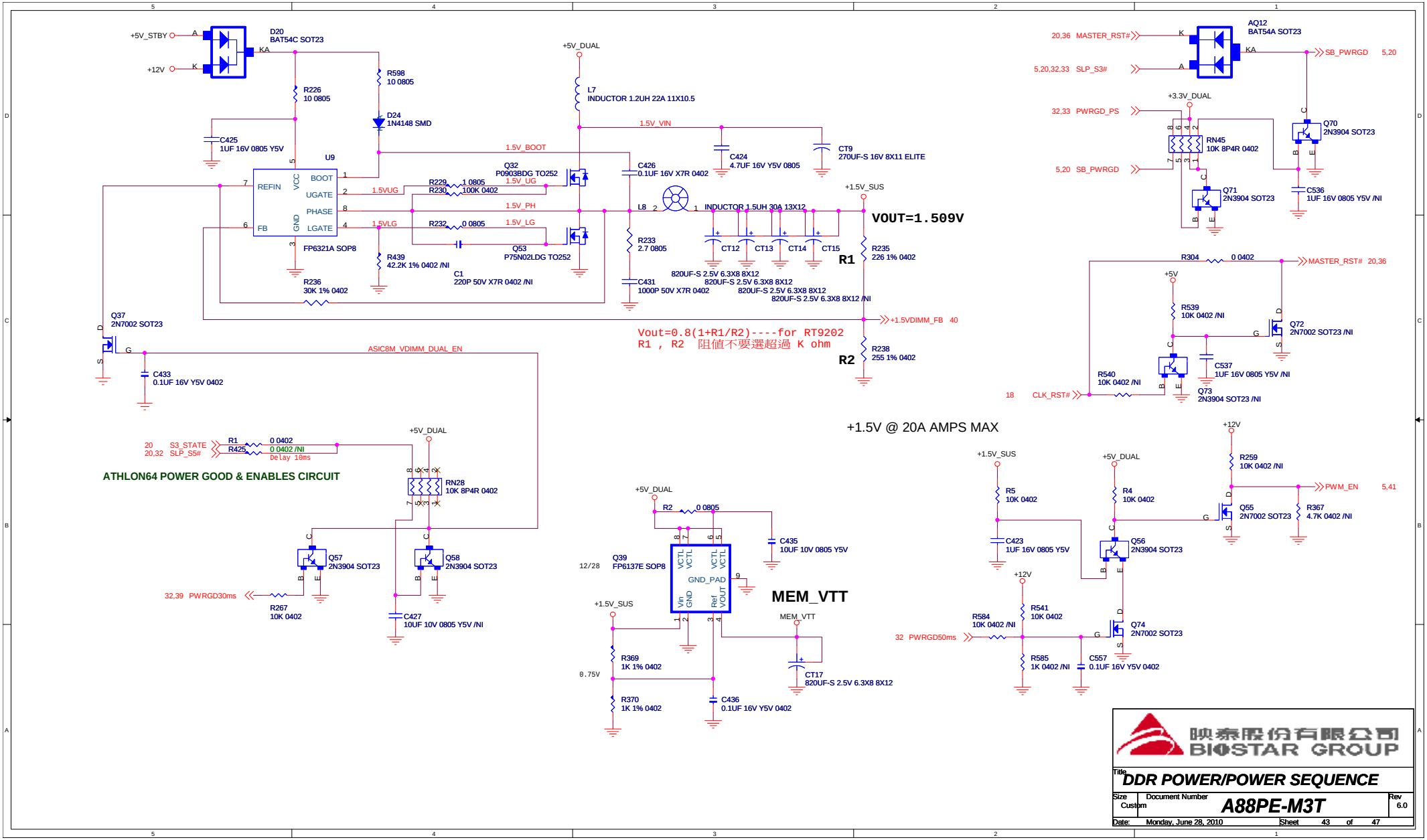
+5V_STBY
+12V
D20
BAT54C SOT23
R226
10 0805
R598
10 0805
D24
1N4148 SMD
C425
1UF 16V 0805 Y5V
U9
REFIN
FB
VCC
GND
BOOT
UGATE
PHASE
LGATE
FP6321A SOP8
1.5VUG
1.5VLG
R229
R230
1 0805
100K 0402
R232
0 0805
R439
42.2K 1% 0402 /NI
C1
220P 50V X7R 0402 /NI
R236
30K 1% 0402
Q32
P0903BDG TO252
Q53
P75N02LDG TO252
1.5V_UG
1.5V_LG
1.5V_PH
1.5V_BOOT
+5V_DUAL
L7
INDUCTOR 1.2UH 22A 11X10.5
1.5V_VIN
C426
0.1UF 16V X7R 0402
C424
4.7UF 16V Y5V 0805
CT9
270UF-S 16V 8X11 ELITE
L8
INDUCTOR 1.5UH 30A 13X12
+1.5V_SUS
VOUT=1.509V
CT12
CT13
CT14
CT15
820UF-S 2.5V 6.3X8 8X12
820UF-S 2.5V 6.3X8 8X12
820UF-S 2.5V 6.3X8 8X12
820UF-S 2.5V 6.3X8 8X12 /NI
R233
2.7 0805
C431
1000P 50V X7R 0402
R1
R235
226 1% 0402
+1.5VDIMM_FB 40
Vout=0.8(1+R1/R2)----for RT9202
R1 , R2 阻值不要選超過 K ohm
R2
R238
255 1% 0402
Q37
2N7002 SOT23
ASIC8M_VDIMM_DUAL_EN
C433
0.1UF 16V Y5V 0402
20,36 MASTER_RST#
5,20,32,33 SLP_S3#
AQ12
BAT54A SOT23
SB_PWRGD 5,20
+3.3V_DUAL
32,33 PWRGD_PS
5,20 SB_PWRGD
RN45
10K 8P4R 0402
Q70
2N3904 SOT23
Q71
2N3904 SOT23
C536
1UF 16V 0805 Y5V /NI
R304
0 0402
MASTER_RST# 20,36
+5V
R539
10K 0402 /NI
Q72
2N7002 SOT23 /NI
C537
1UF 16V 0805 Y5V /NI
R540
10K 0402 /NI
18 CLK_RST#
Q73
2N3904 SOT23 /NI
+1.5V @ 20A AMPS MAX
20 S3_STATE
20,32 SLP_S5#
R1
R425
0 0402
0 0402 /NI
Delay 10ms
ATHLON64 POWER GOOD & ENABLES CIRCUIT
+5V_DUAL
RN28
10K 8P4R 0402
Q57
2N3904 SOT23
Q58
2N3904 SOT23
32,39 PWRGD30ms
R267
10K 0402
C427
10UF 10V 0805 Y5V /NI
+5V_DUAL
R2
0 0805
C435
10UF 10V 0805 Y5V
12/28
Q39
FP6137E SOP8
VCTL
GND_PAD
Vin
GND
Ref
VOUT
MEM_VTT
+1.5V_SUS
R369
1K 1% 0402
0.75V
R370
1K 1% 0402
C436
0.1UF 16V Y5V 0402
CT17
820UF-S 2.5V 6.3X8 8X12
+1.5V_SUS
R5
10K 0402
C423
1UF 16V 0805 Y5V
+5V_DUAL
R4
10K 0402
Q56
2N3904 SOT23
+12V
R259
10K 0402 /NI
PWM_EN 5,41
Q55
2N7002 SOT23
R367
4.7K 0402 /NI
+12V
R584
10K 0402 /NI
R541
10K 0402
32 PWRGD50ms
Q74
2N7002 SOT23
R585
1K 0402 /NI
C557
0.1UF 16V Y5V 0402
映泰股份有限公司
BIOSTAR GROUP
Title
DDR POWER/POWER SEQUENCE
Size
Custom
Document Number
A88PE-M3T
Rev
6.0
Date: Monday, June 28, 2010
Sheet 43 of 47

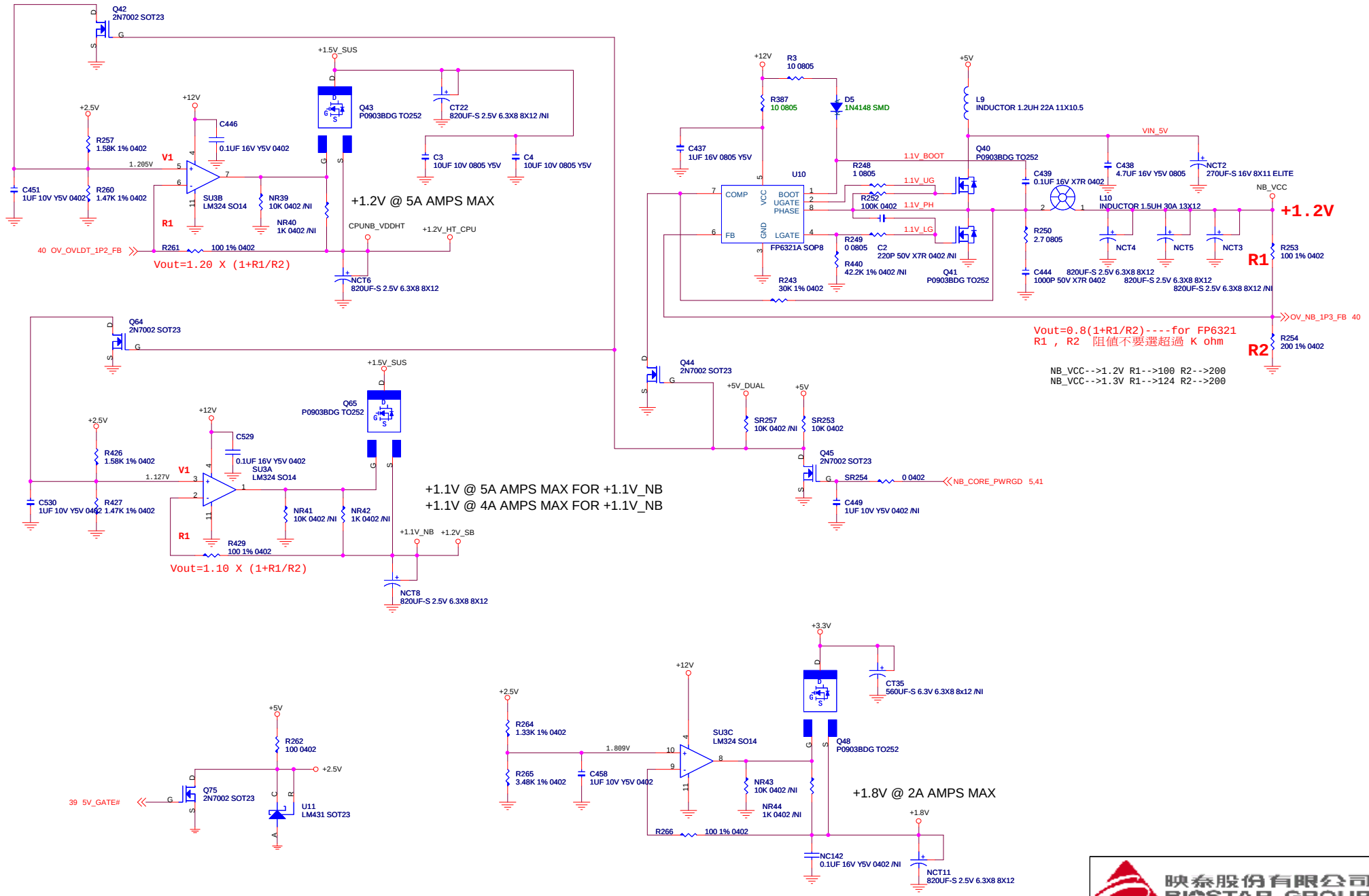

映泰股份有限公司
BIOSTAR GROUP

Title	NB/SB CORE POWER	
Size: Custom	Document Number: A88PE-M3T	Rev: 6.0
Date: Monday, June 28, 2010	Sheet 44 of 47	

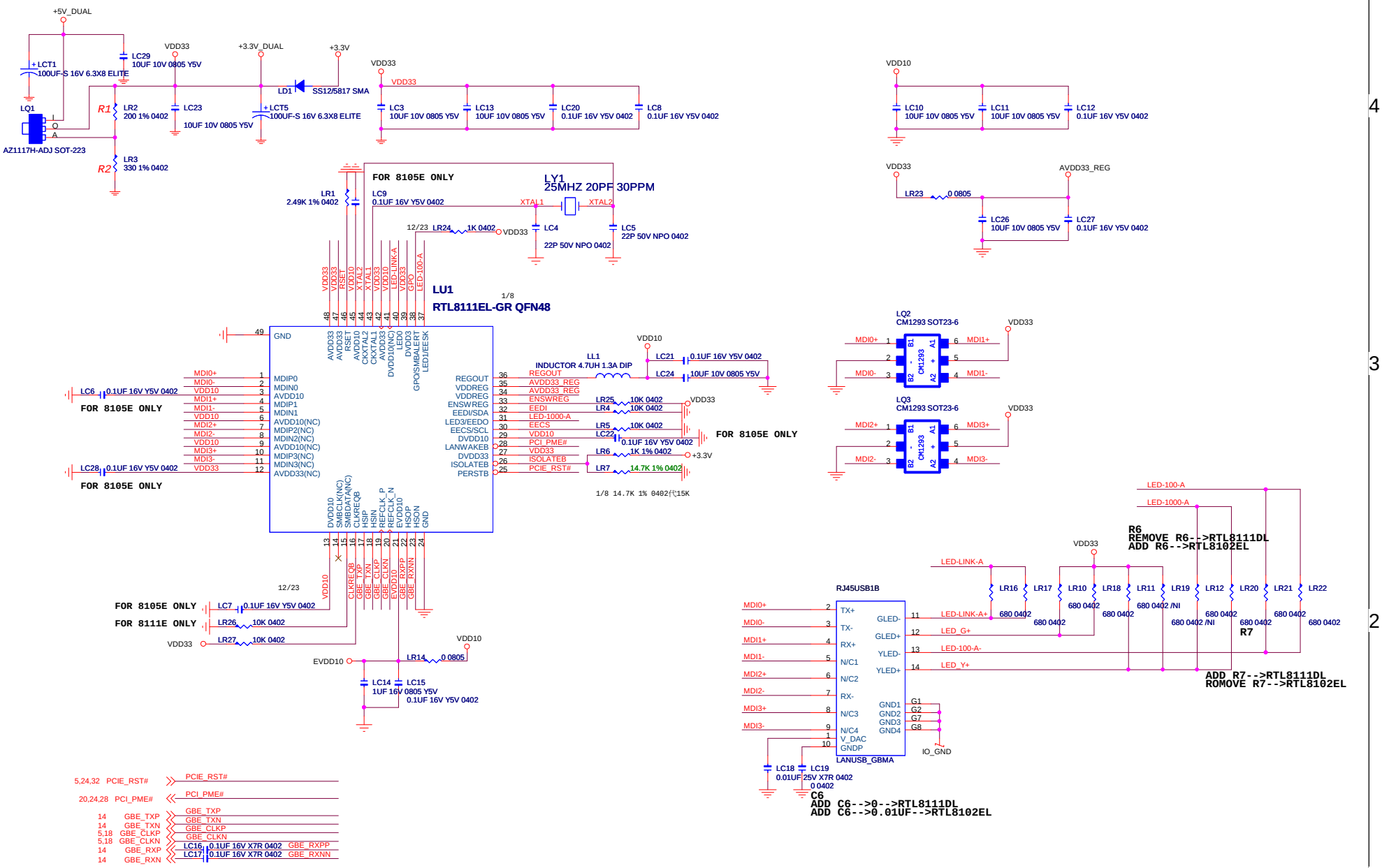

Title	RTL8111E/8105E
Size	
Document Number	A88PE-M3T
Custom	
Rev	6.0
Date:	Monday, June 28, 2010
Sheet	45 of 47

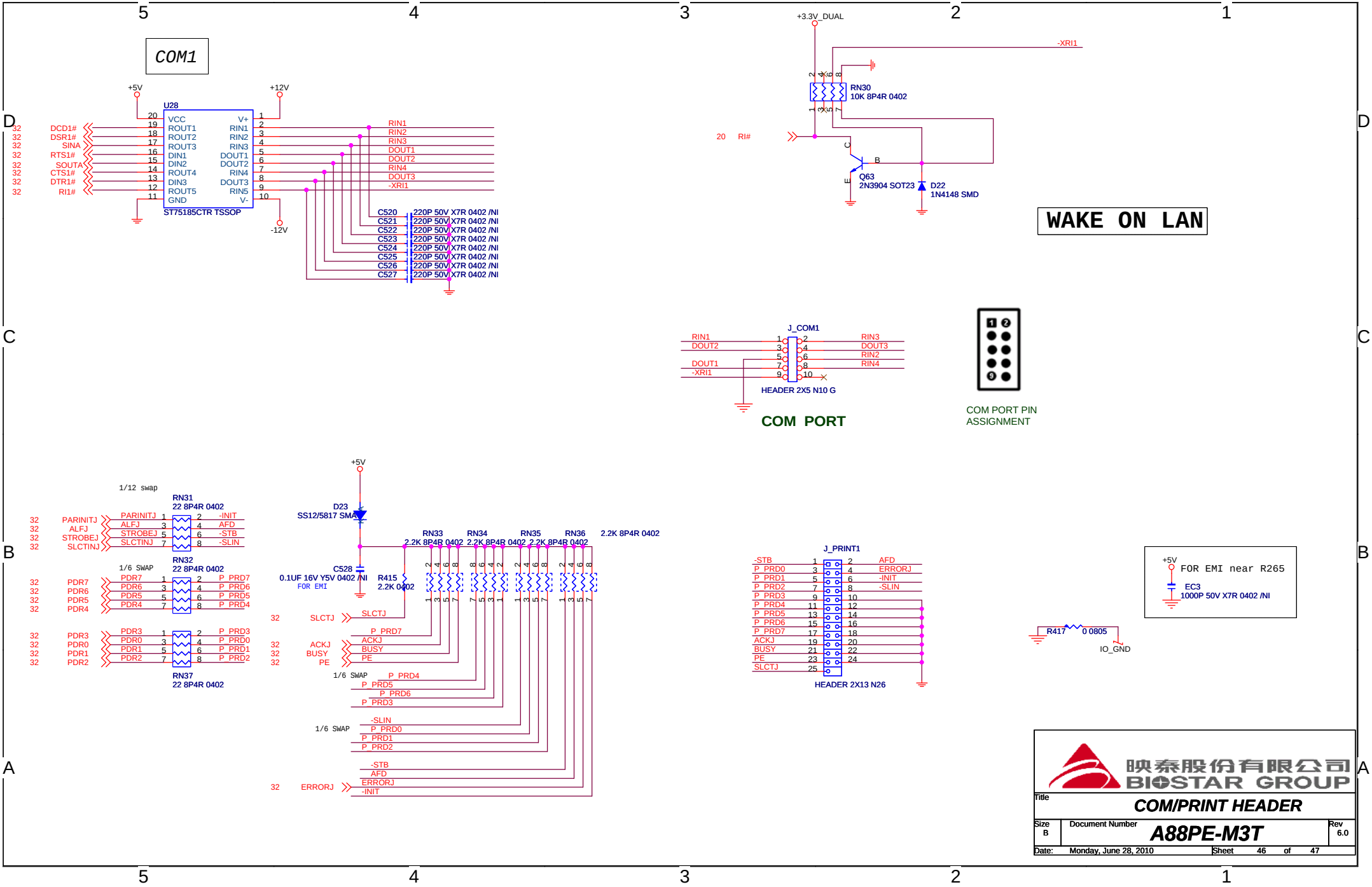
COM1
U28
ST75185CTR TSSOP
+5V
+12V
-12V
DCD1#
DSR1#
SINA
RTS1#
SOUTA
CTS1#
DTR1#
RI1#
RIN1
RIN2
RIN3
DOUT1
DOUT2
RIN4
DOUT3
-XRI1
C520
C521
C522
C523
C524
C525
C526
C527
220P 50V X7R 0402 /NI
+3.3V_DUAL
-XRI1
RN30
10K 8P4R 0402
RI#
Q63
2N3904 SOT23
D22
1N4148 SMD
WAKE ON LAN
J_COM1
HEADER 2X5 N10 G
COM PORT
COM PORT PIN ASSIGNMENT
1/12 swap
RN31
22 8P4R 0402
RN32
22 8P4R 0402
RN37
22 8P4R 0402
PARINITJ
ALFJ
STROBEJ
SLCTINJ
-INIT
AFD
-STB
-SLIN
PDR7
PDR6
PDR5
PDR4
PDR3
PDR0
PDR1
PDR2
P_PRD7
P_PRD6
P_PRD5
P_PRD4
P_PRD3
P_PRD0
P_PRD1
P_PRD2
D23
SS12/5817 SMA
C528
0.1UF 16V Y5V 0402 /NI
FOR EMI
R415
2.2K 0402
RN33
RN34
RN35
RN36
2.2K 8P4R 0402
SLCTJ
ACKJ
BUSY
PE
ERRORJ
1/6 SWAP
J_PRINT1
HEADER 2X13 N26
FOR EMI near R265
EC3
1000P 50V X7R 0402 /NI
R417
0 0805
IO_GND
映泰股份有限公司
BIOSTAR GROUP
Title
COM/PRINT HEADER
Size
B
Document Number
A88PE-M3T
Rev
6.0
Date:
Monday, June 28, 2010
Sheet
46
of
47

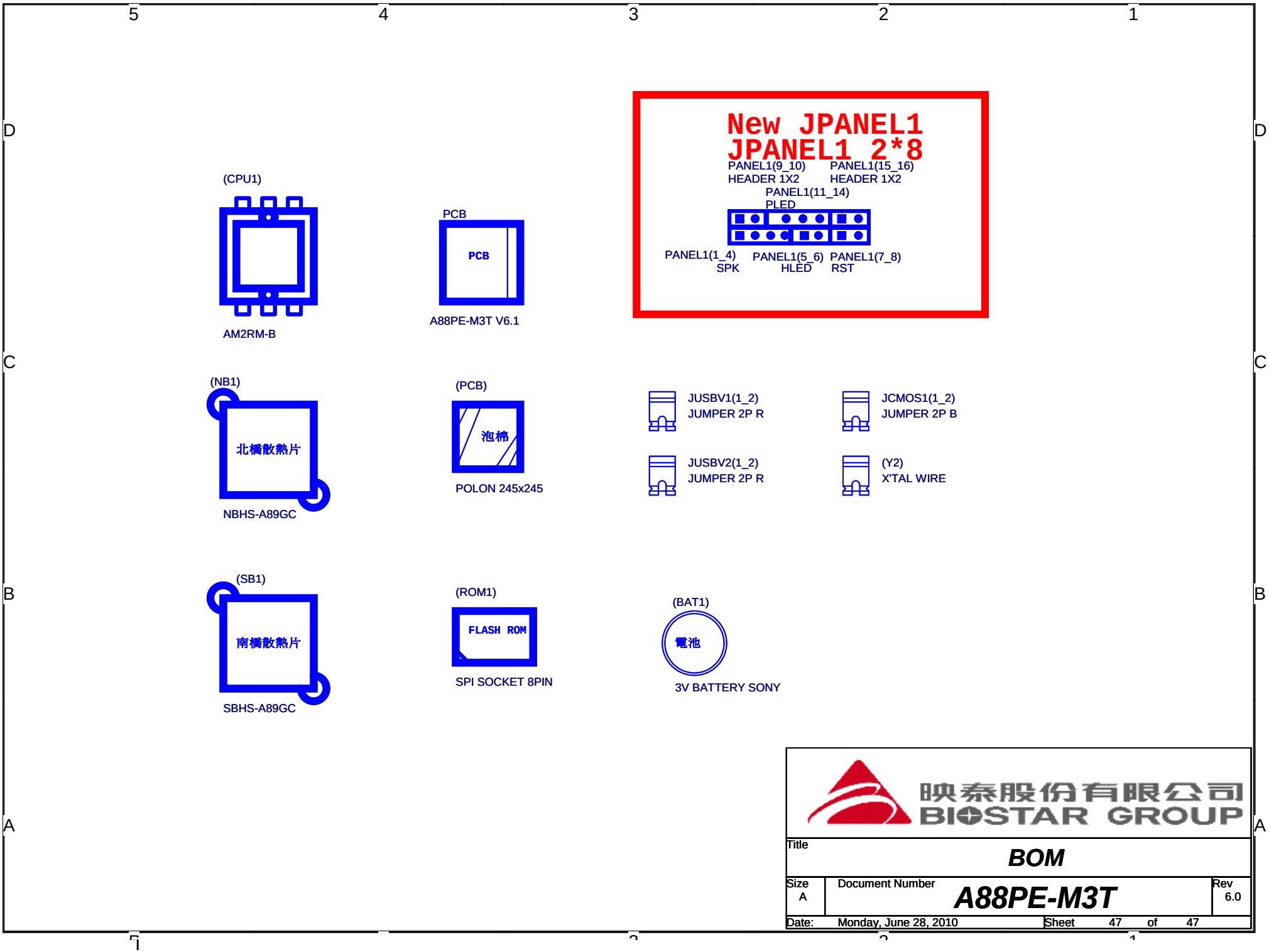

映泰股份有限公司
BIOSTAR GROUP

Title	**BOM**	
Size: A	Document Number: **A88PE-M3T**	Rev: 6.0
Date: Monday, June 28, 2010	Sheet 47 of 47	