Schematics Page Index (Title / Revision / Change Date)

Page	Title of Schematics Page	Rev.		Page	Title of Schematics Page	Rev.
01	Schematics Page Index	SD		41	Modem Connector	SD
02	Block Diagram	SD		42	KB Connector	SD
03	Penryn(HOST BUS) 1/3	SD		43	USB 2.0 to PATA Bridge	SD
04	Penryn(HOST BUS) 2/3	SD		44	Status LED	SD
05	Penryn (Power/Gnd) 3/3	SD		45	Touch Pad Connector	SD
06	CLOCK GEN	SD		46	HW Thermal Protection	SD
07	Cantiga (HOST) 1/7	SD		47	FAN	SD
08	Cantiga (DMI) 2/7	SD		48	Thermal Sensor	SD
09	Cantiga (GRAPHIC) 3/7	SD		49	Power Design Diagram	SD
10	Cantiga (DDRII) 4/7	SD		50	DCIN&Charger	SD
11	Cantiga (POWER,VCC) 5/7	SD		51	Discharge Circuit	SD
12	Cantiga (VCC CORE) 6/7	SD		52	Identify IC	SD
13	Cantiga (VSS) 7/7	SD		53	SYS Power (+3_3V/+5V)	SD
14	DDRII(SO-DIMM_0) 1/3	SD		54	SYS Power(+1_5V/+1_05V)	SD
15	DDRII(SO-DIMM_1) 2/3	SD		55	DDR2 Power(+1_8V/+0_9V)	SD
16	DDRII(Termination) 3/3	SD		56	CPU_Vcore---ISL6266A	SD
17	ICH9-M(PCI/USB) 1/5	SD		57	Others power plane	SD
18	ICH9-M(LPC,IDE,SATA)2/5	SD		58	OVP protection	SD
19	ICH9-M(GPIO) 3/5	SD		59	VGA Power(ATI VDD)	SD
20	ICH9-M(POWER) 4/5	SD		60	GMCH Power(Dummy Page)	SD
21	ICH9-M(GND) 5/5	SD		61	LID Switch	SD
22	EC+KBC(WPC8763L)	SD		62	Inverter	SD
23	Flash ROM/SPI	SD		63	LVDS	SD
24	Debug Port	SD		64	HDMI	SD
25	EXPRESS CARD	SD		65	CRT	SD
26	Mini-PCIE Card (WLAN)	SD		66	Audio (CODEC)	SD
27	Robson Connector	SD		67	Audio (MUTE)	SD
28	TV-Tuner Connector	SD		68	Audio (Power)	SD
29	LAN (88E8055) 1/2	SD		69	Audio (Speaker AMP)	SD
30	LAN (Transformer) 2/2	SD		70	Audio (Speaker Connector)	SD
31	SATA HDD	SD		71	VGA (PCI-E) 1/6	SD
32	PATA CD-ROM	SD		72	VGA (STRAP) 2/6	SD
33	Media Key Connector	SD		73	VGA (I/O) 3/6	SD
34	PCI (PCI BUS)	SD		74	VGA (Memory BUS) 4/6	SD
35	PCI (i.LINK)	SD		75	VGA (LVDS) 5/6	SD
36	PCI (SD/MS-DUO)	SD		76	VGA (POWER) 6/6	SD
37	Camera Connector	SD		77	VRAM (GDDR3) 1/3	SD
38	Felica Connector	SD		78	VRAM (GDDR3) 2/3	SD
39	USB&Audio Jack Connector	SD		79	VRAM (BYPASS) 3/3	SD
40	Bluetooth Connector	SD		80	HOLE	SD

DVT2 BOM Control Table

VALUE Head	CA_	AT_	M86_	M82_	NC_
UMA	Stuff	Un-stuff	Un-stuff	Un-stuff	Un-stuff
Discrete VGA with M86	Un-stuff	Stuff	Stuff	Un-stuff	Un-stuff
Discrete VGA with M82	Un-stuff	Stuff	Un-stuff	Stuff	Un-stuff

P. Leader	Check by	Design by
JERRY HSIAO	JERRY HSIAO	TONY CHENG

Project Code & Schematics Subject: M760 Main Board

PCB P/N: FUBAI 1P-0083101-8010)
HANNSTAR (1P-0083500-8010)
IRIS (1P-0083J01-8010)

FOXCONN
HON HAI Precision Ind. Co., Ltd.
CCPBG - R&D Division

Title: Index Page
Size: Custom | Document Number: M760 | Rev: 1.0
Date: Thursday, March 27, 2008 | Sheet 1 of 89

M760 (IRX-4370) Montevina + M86-LP/M82-XT

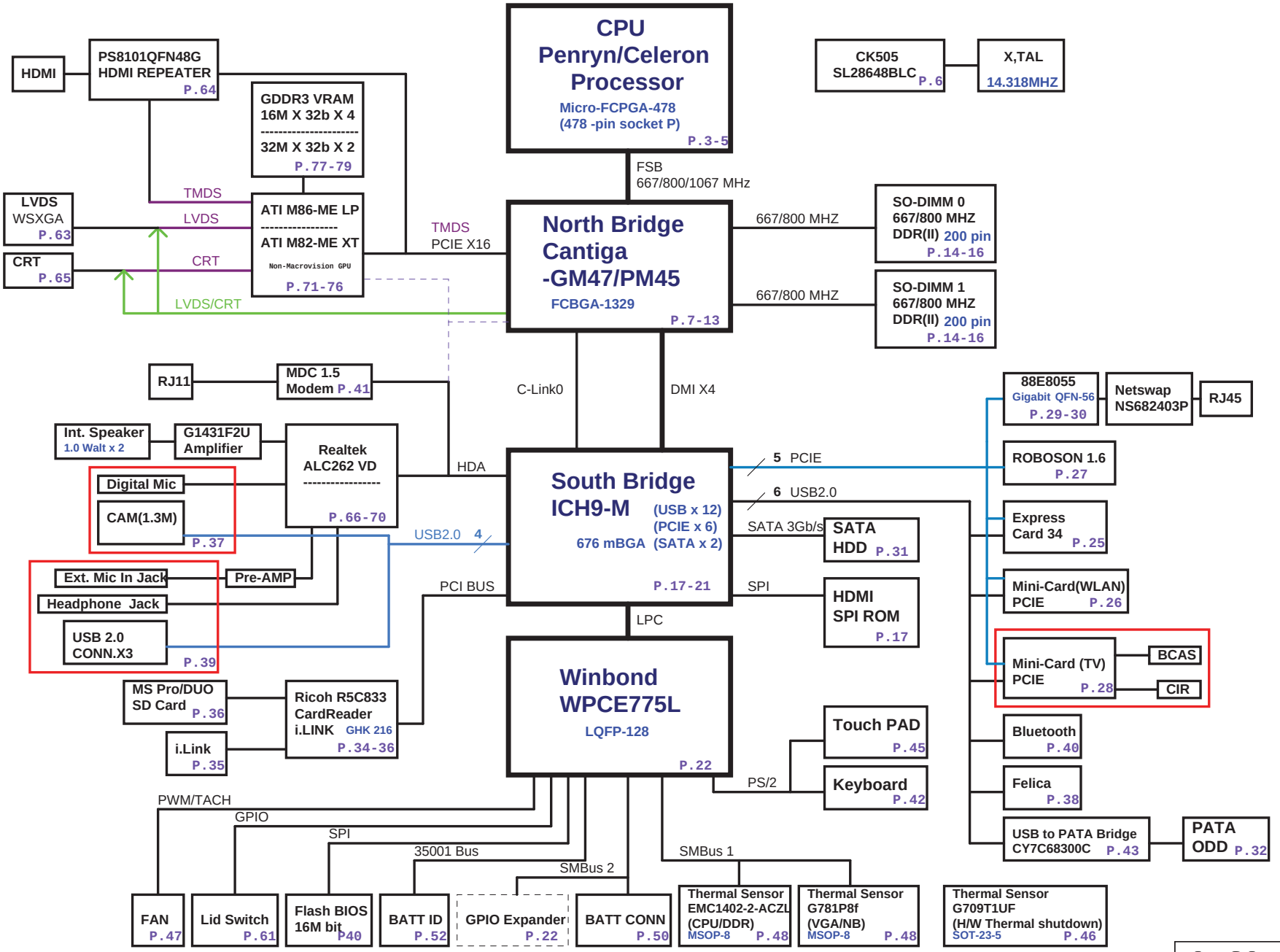

TI CHARGER BQ24751 P.63

INPUTS	OUTPUTS
DC_IN	BT+ DCBATOUT

SYSTEM DC/DC TPS51125RGER P.64

INPUTS	OUTPUTS
DCBATOUT	+5VALW +5VALW_LDO +3VALW +ECVCC +15V_ALW

SYSTEM DC/DC SC411 P.65

INPUTS	OUTPUTS
DCBATOUT	+1_5VRUN +1_05VRUN

SYSTEM DC/DC TPS51116RGER P.66

INPUTS	OUTPUTS
DCBATOUT	+1_8VSUS +0_9VSUS

CPU DC/DC ISL6266A P.67

INPUTS	OUTPUTS
DCBATOUT	VHCORE

SYSTEM DC/DC APL5912 P.70

INPUTS	OUTPUTS
+1_5VRUN	PEX_VDD

SYSTEM DC/DC SC411 P.70

INPUTS	OUTPUTS
DCBATOUT	NV_VDD

SYSTEM DC/DC MAX8776 P.71

INPUTS	OUTPUTS
DCBATOUT	+VGFX_CORE

FOXCONN HON HAI Precision Ind. Co., Ltd.
CCPBG - R&D Division

Title: **Block Diagram**

Size	Document Number	Rev
Custom	M760	1.0

Date: Thursday, March 27, 2008 Sheet 2 of 89

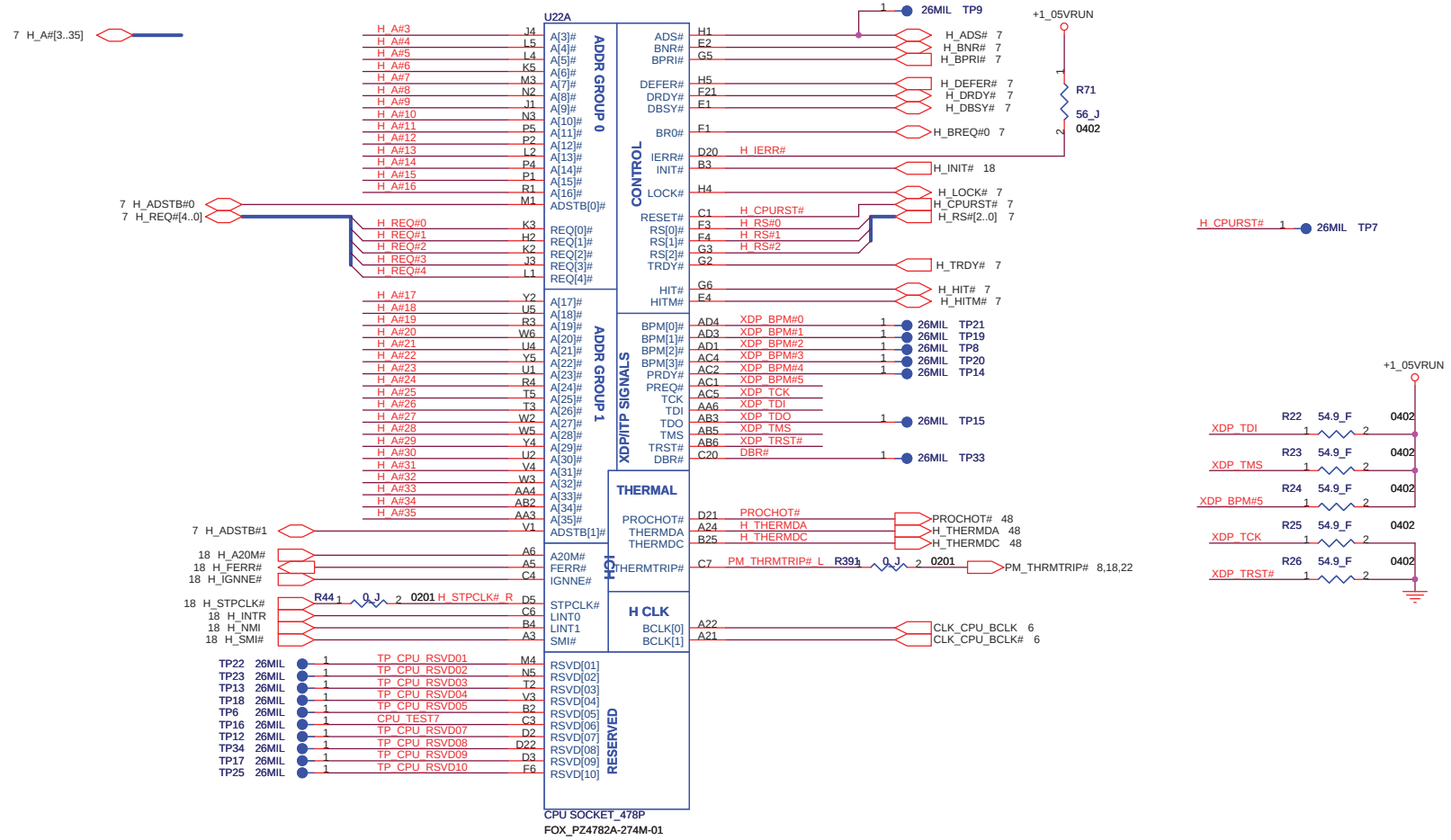

FOXCONN	HON HAI Precision Ind. Co., Ltd. CCPBG - R&D Division
Title	Penryn (HOST BUS) 1/3
Size A3	Document Number M760
Rev	1.0
Date: Thursday, March 27, 2008	Sheet 3 of 89

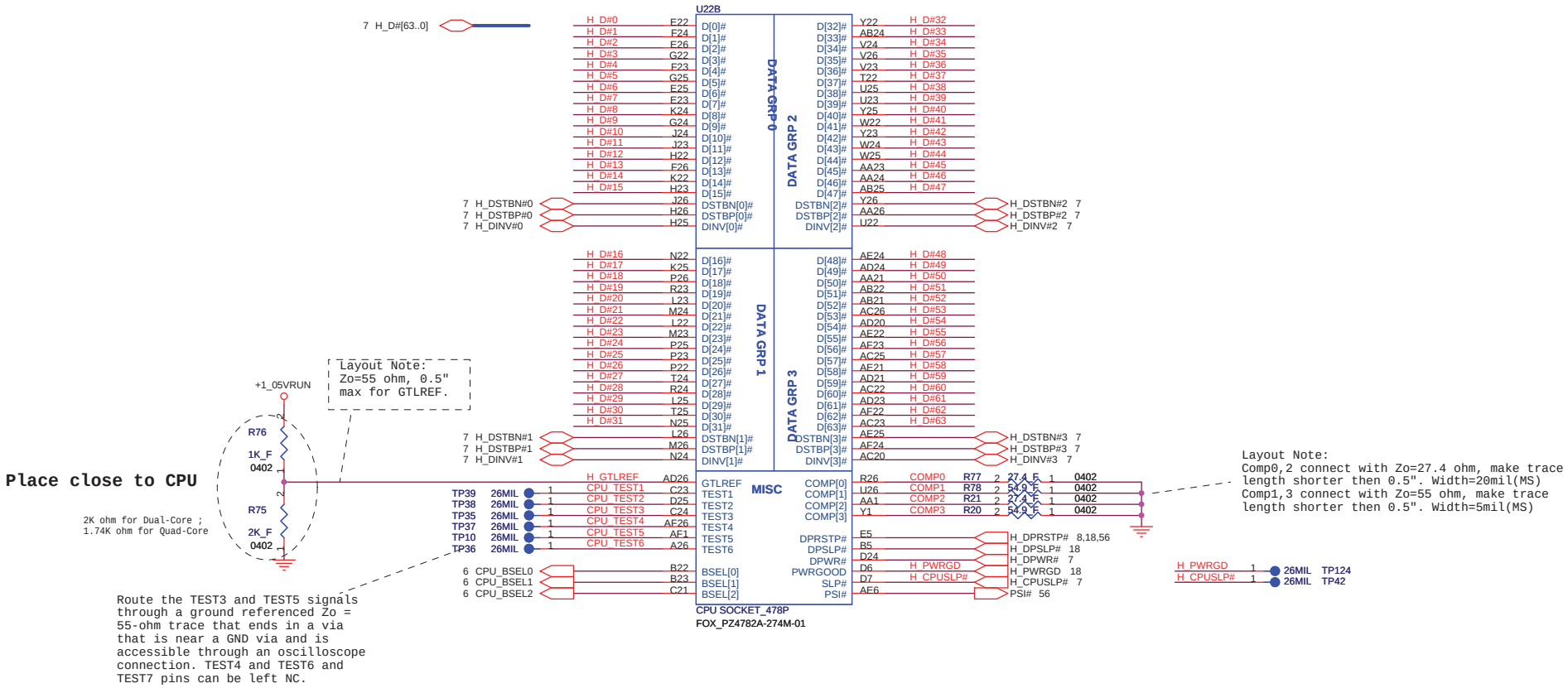

FOXCONN	HON HAI Precision Ind. Co., Ltd. CCPBG - R&D Division	
Title	Penryn (HOST BUS) 2/3	
Size A3	Document Number M760	Rev 1.0
Date: Thursday, March 27, 2008	Sheet 4 of 89	

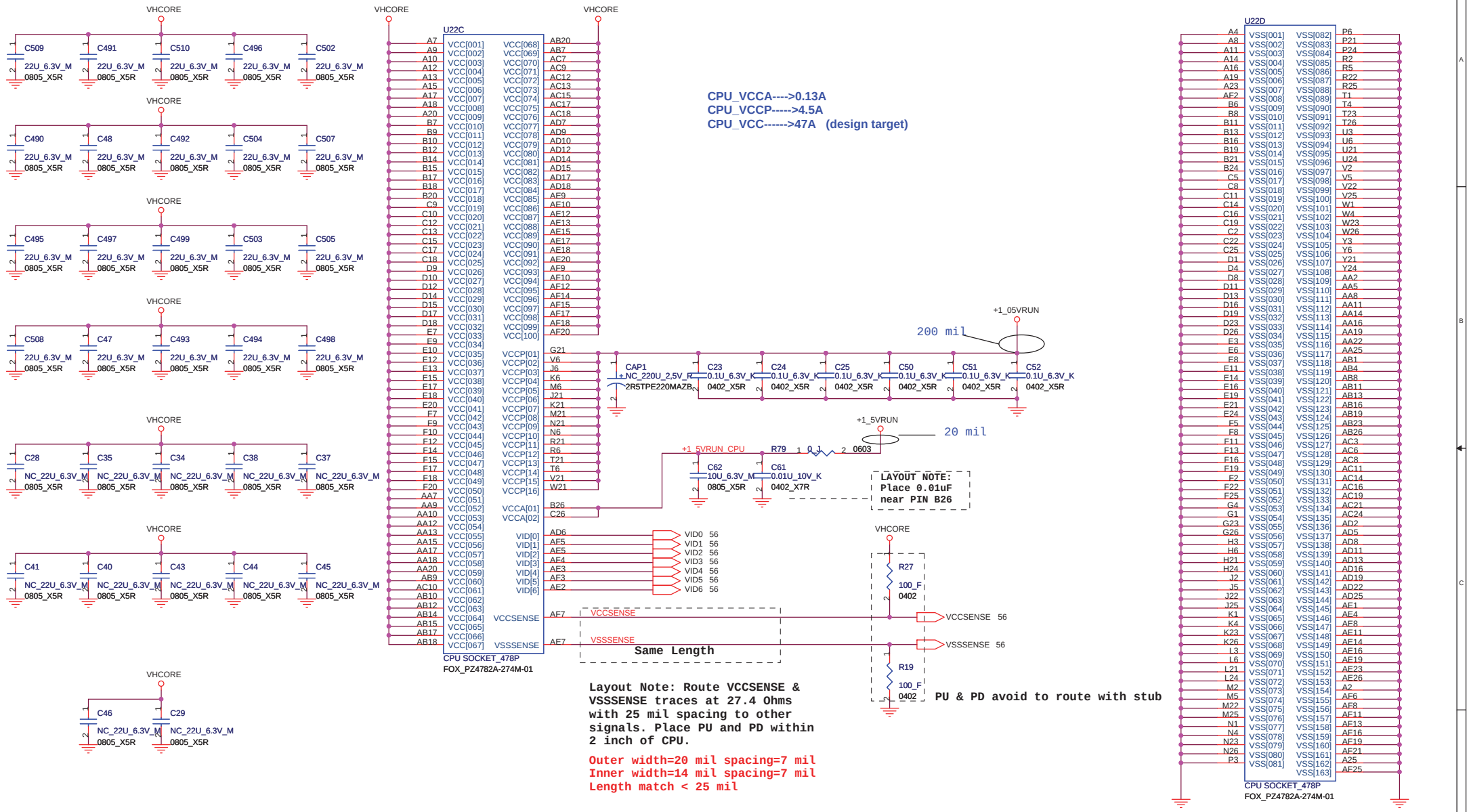

FOXCONN	HON HAI Precision Ind. Co., Ltd. CCPBG - R&D Division	
Title	Penryn (POWER/GROUND) 3/3	
Size A3	Document Number M760	Rev 1.0
Date: Thursday, March 27, 2008	Sheet 5 of 89	

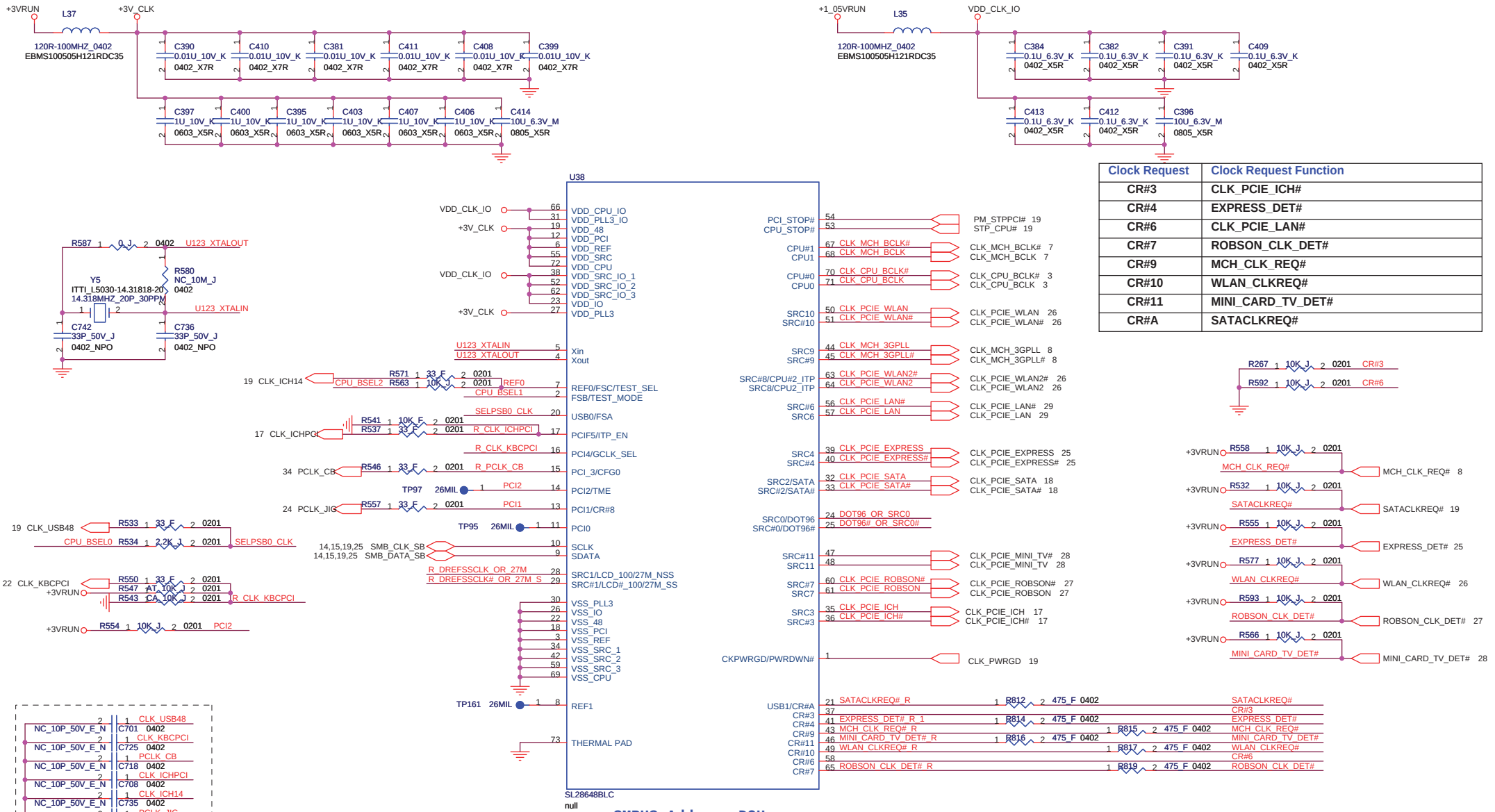

Clock Request	Clock Request Function
CR#3	CLK_PCIE_ICH#
CR#4	EXPRESS_DET#
CR#6	CLK_PCIE_LAN#
CR#7	ROBSON_CLK_DET#
CR#9	MCH_CLK_REQ#
CR#10	WLAN_CLKREQ#
CR#11	MINI_CARD_TV_DET#
CR#A	SATACLKREQ#

FSB Frequency Table:

FSLC	FSLB	FSLA	CPU	SRC	PCI
0	0	0	266.66	100	33
0	0	1	133.33	100	33
0	1	0	200	100	33
0	1	1	166.66	100	33
1	0	0	333.33	100	33
1	0	1	100	100	33
1	1	0	400	100	33

FOXCONN
HON HAI Precision Ind. Co., Ltd.
CCPBG - R&D Division

Title	CLOCK GEN	
Size A3	Document Number M760	Rev 1.0
Date: Thursday, March 27, 2008	Sheet 6 of 89	

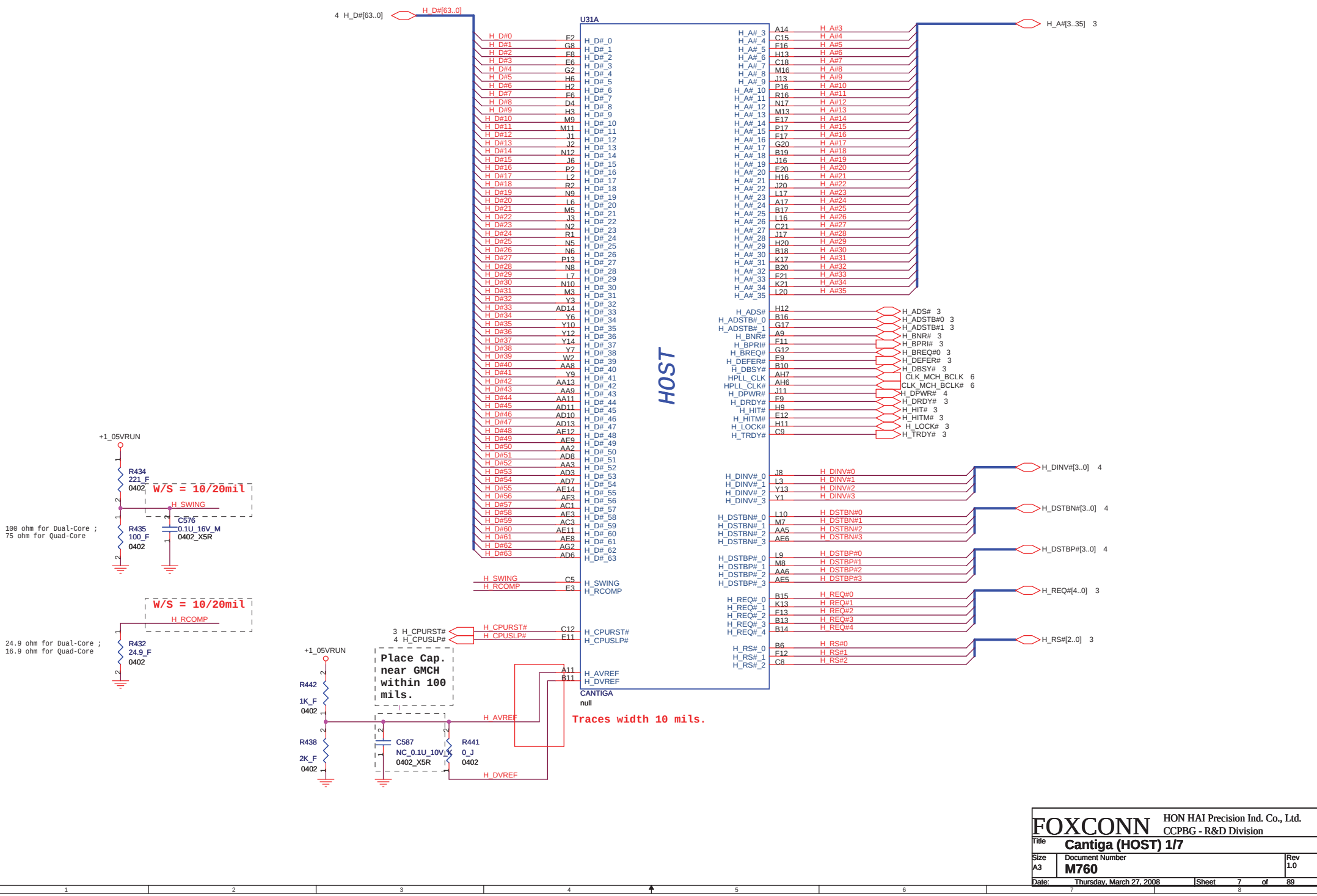

FOXCONN	HON HAI Precision Ind. Co., Ltd. CCPBG - R&D Division	
Title	Cantiga (HOST) 1/7	
Size A3	Document Number M760	Rev 1.0
Date: Thursday, March 27, 2008	Sheet 7 of 89	

MCH_CFG_0~2 FSB Frequency	000 = FSB1066 ; 010 = FSB800; 011 = FSB667 ; Others = Reserved
MCH_CFG_3~4	Reserved
MCH_CFG_5 DMI X2 Select	Low = DMI X2 High = DMI X4 (Default)
MCH_CFG_6 ITPM Host Interface	Low =The ITPM Host Interface is enabled2 High = The ITPM Host Interface is disabled (default)
MCH_CFG_7 Intel Management Engine Crypto Strap	Low = Intel Management Engine Crypto Transport Layer Security (TLS) cipher suite with no confidentiality High = Intel Management Engine Crypto TLS cipher suite with confidentiality (default)
MCH_CFG_8	Reserved
MCH_CFG_9 PCIE Graphics Lane	Low = Reverse Lane High = Normal operation
MCH_CFG_10 PCIE Loopback enable	Low = Enabled3 High = Disabled (default)
MCH_CFG_11	Reserved
MCH_CFG_12 ALLZ	Low = ALLZ mode enabled3 High = Disabled (default)
MCH_CFG_13 XOR	Low = XOR mode enabled3 High = Disabled (default)
MCH_CFG_14~15	Reserved
MCH_CFG_16 FSB Dynamic ODT	Low = Dynamic ODT disabled High = Dynamic ODT enabled (default)
MCH_CFG_17~18	Reserved
MCH_CFG_19 DMI Lane Reversal	Low = Normal operation (Default): Lane Numbered in Order High = Reverse Lanes DMI x4 mode [(G)MCH->ICH]: (3->0, 2-> 1, 1->2 and 0->3) DMI x2 mode [(G)MCH ->ICH]: (3->0, 2->1)
MCH_CFG_20 Digital Display Port (SDVO/ DP/iHDMI) Concurrent with PCIe	Low = Only digital display port (SDVO/DP/iHDMI) or PCIe is operational (default) High = Digital display port (SDVO/DP/iHDMI) and PCIe are operating simultaneously via the PEG port

U31B

RSVD

RSVD1 RSVD2 RSVD3 RSVD4 RSVD5 RSVD6 RSVD7 RSVD8 RSVD9 RSVD10 RSVD11 RSVD12 RSVD13 RSVD14 RSVD15 RSVD16 RSVD17 RSVD20 RSVD22 RSVD23 RSVD24 RSVD25

DDR CLK/ CONTROL/COMPENSATION

SA_CK_0 SA_CK_1 SB_CK_0 SB_CK_1 SA_CK#_0 SA_CK#_1 SB_CK#_0 SB_CK#_1 SA_CKE_0 SA_CKE_1 SB_CKE_0 SB_CKE_1 SA_CS#_0 SA_CS#_1 SB_CS#_0 SB_CS#_1 SA_ODT_0 SA_ODT_1 SB_ODT_0 SB_ODT_1 SM_RCOMP SM_RCOMP# SM_RCOMP_VOH SM_RCOMP_VOL SM_VREF SM_PWROK SM_REXT SM_DRAMRST#

CLK

DPLL_REF_CLK DPLL_REF_CLK# DPLL_REF_SSCLK DPLL_REF_SSCLK# PEG_CLK PEG_CLK#

DMI

DMI_RXN_0 DMI_RXN_1 DMI_RXN_2 DMI_RXN_3 DMI_RXP_0 DMI_RXP_1 DMI_RXP_2 DMI_RXP_3 DMI_TXN_0 DMI_TXN_1 DMI_TXN_2 DMI_TXN_3 DMI_TXP_0 DMI_TXP_1 DMI_TXP_2 DMI_TXP_3

CFG[17:3] internal pull-up
CFG[20:18] internal pull-down

CFG_0 CFG_1 CFG_2 CFG_3 CFG_4 CFG_5 CFG_6 CFG_7 CFG_8 CFG_9 CFG_10 CFG_11 CFG_12 CFG_13 CFG_14 CFG_15 CFG_16 CFG_17 CFG_18 CFG_19 CFG_20

GRAPHICS VID

GFX_VID_0 GFX_VID_1 GFX_VID_2 GFX_VID_3 GFX_VID_4 GFX_VR_EN

MISC

PM_SYNC# PM_DPRSTP# PM_EXT_TS#_0 PM_EXT_TS#_1 PWROK RSTIN# THERMTRIP# DPRSLPVR

MISC

CL_CLK CL_DATA CL_PWROK CL_RST# CL_VREF DDPC_CTRLCLK DDPC_CTRLDATA SDVO_CTRLCLK SDVO_CTRLDATA CLKREQ# ICH_SYNC# TSATN#

HDA

HDA_BCLK HDA_RST# HDA_SDI HDA_SDO HDA_SYNC

NC

NC_1 NC_2 NC_3 NC_4 NC_5 NC_6 NC_7 NC_8 NC_9 NC_10 NC_11 NC_12 NC_13 NC_14 NC_15 NC_16 NC_17 NC_18 NC_19 NC_20 NC_21 NC_22 NC_23 NC_24 NC_25 NC_26

CANTIGA
null

+1_8VSUS

R468 1K_F 0402
R467 3.01K_F 0402
R465 1K_F 0402
C640 0.01U_16V_K 0402_X7R
C636 2.2U_6.3V_K 0603_B
C629 0.01U_16V_K 0402_X7R
C626 2.2U_6.3V_K 0603_B
SM_RCOMP_VOH
SM_RCOMP_VOL
R462 80.6_F 0402
R461 80.6_F 0402
SM_PWROK R208 10K_F 0201
SM_REXT R459 499R_F 0201
26MIL TP88
DREFCLK 6
DREFCLK# 6
DREFSSCLK 6
DREFSSCLK# 6
CLK_MCH_3GPLL 6
CLK_MCH_3GPLL# 6
DMI_TXN[3:0] 17
DMI_TXP[3:0] 17
DMI_RXN[3:0] 17
DMI_RXP[3:0] 17
R220 NC_10K_J 0201 DREFCLK
R222 NC_10K_J 0201 DREFSSCLK
R219 NC_10K_J 0201 DREFCLK#
R223 NC_10K_J 0201 DREFSSCLK#
26MIL TP81 TP85 TP86 TP83 TP82 TP84
CL_CLK0 19
CL_DATA0 19
MPWROK 19
CL_RST#0 19
MCH_CLVREF
Width =12mil
R204 1K_F 0402
C260 0.1U_10V_K 0402_X5R
R209 499_F 0402
26MIL TP73 TP72
HDMIB_CTRL_CLK 64
HDMIB_CTRL_DATA 64
MCH_CLK_REQ# 6
MCH_ICH_SYNC# 19
GM_TSATN# 22
+1_05VRUN
R445 56_J 0402
HDA_HDMI_BITCLK 18
HDA_HDMI_RST# 18
R470 CA_33_J 0402
HDA_HDMI_SDATAIN2 18
HDA_HDMI_SDATAOUT 18
HDA_HDMI_SYNC 18

6 MCH_BSEL0
6 MCH_BSEL1
6 MCH_BSEL2
TP55 TP69 TP71 TP68 TP66 TP70 TP61 TP59 TP63 TP64 TP56 TP67 TP65 TP79 TP74 TP75 TP78 26MIL
MCH_CFG_3 MCH_CFG_4 MCH_CFG_5 MCH_CFG_6 MCH_CFG_7 MCH_CFG_8 MCH_CFG_9 MCH_CFG_10 MCH_CFG_11 MCH_CFG_12 MCH_CFG_13 MCH_CFG_14 MCH_CFG_15 MCH_CFG_16 MCH_CFG_17 MCH_CFG_18 MCH_CFG_19 MCH_CFG_20
R154 NC_2.2K_J 0201
R155 NC_2.2K_J 0201
19 PM_SYNC#
4,18,56 H_DPRSTP#
14 PM_EXTTS#0
15 PM_EXTTS#1
19,22 IMVP_PWRGD
17,22,24,25,26,27,28,29,71 PLT_RST#
19,56 DPRSLPVR
PM_SYNC# H_DPRSTP# PM_EXTTS#0 PM_EXTTS#1 IMVP_PWRGD PLT_RST# THRMTRIP#_GMCH DPRSLPVR

+3VRUN
R191 10K_J 0201 PM_EXTTS#1
48 DDR_ALERT#
R200 0_J 0201 PM_EXTTS#0
3,18,22 PM_THRMTRIP#
R147 0_J 0201 THRMTRIP#_GMCH

DDRDIMM_VREF
R225 0_J 0402
SMDDR_VREF
C281 0.1U_16V_M 0402_X5R
C278 0.1U_16V_M 0402_X5R

FOXCONN
HON HAI Precision Ind. Co., Ltd.
CCPBG - R&D Division

Title	Cantiga (DMI) 2/7	
Size: Custom	Document Number: M760	Rev: 1.0
Date: Thursday, March 27, 2008	Sheet 8 of 89	

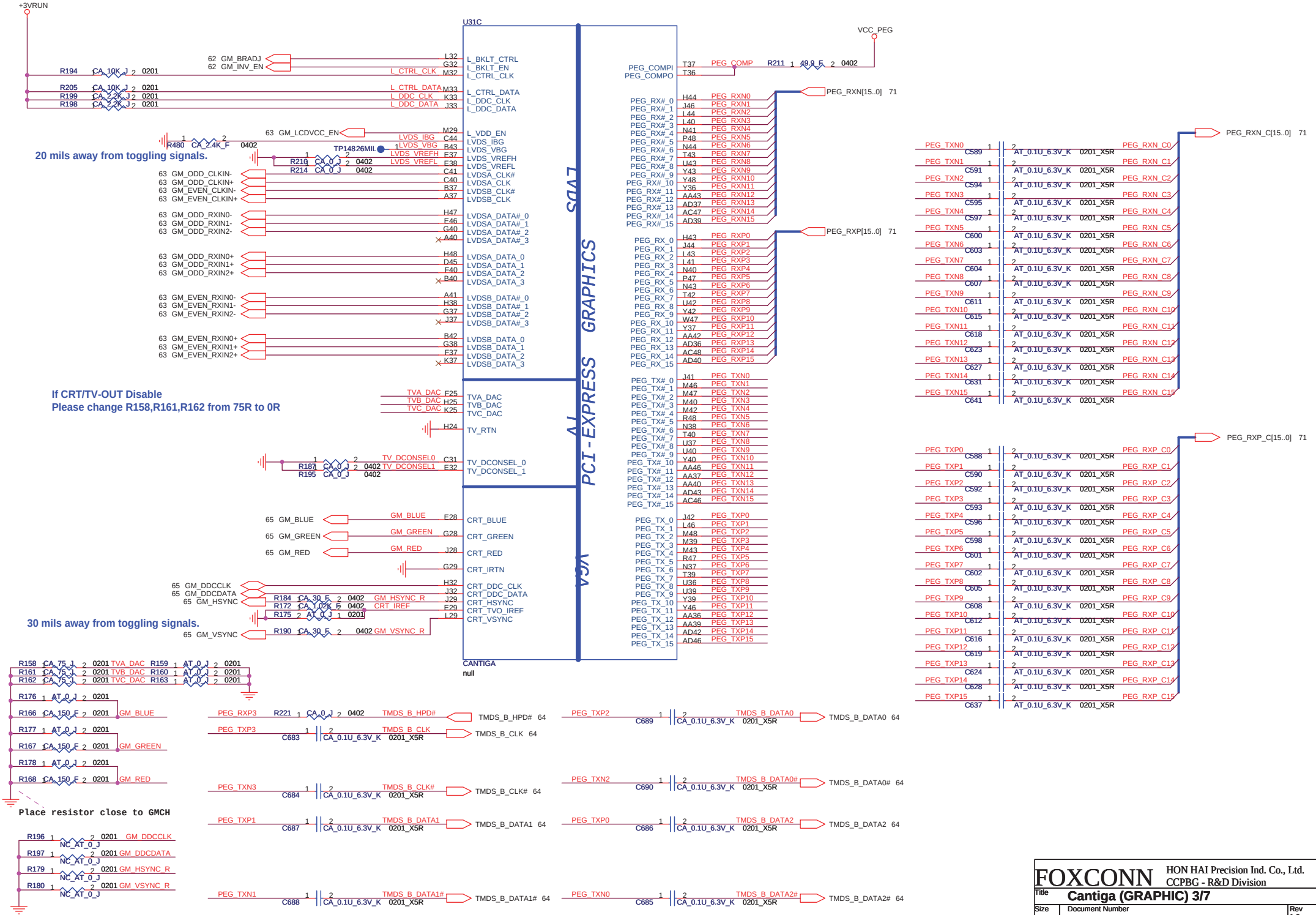

FOXCONN	HON HAI Precision Ind. Co., Ltd. CCPBG - R&D Division	
Title	Cantiga (GRAPHIC) 3/7	
Size A3	Document Number M760	Rev 1.0
Date: Thursday, March 27, 2008	Sheet 9 of 89	

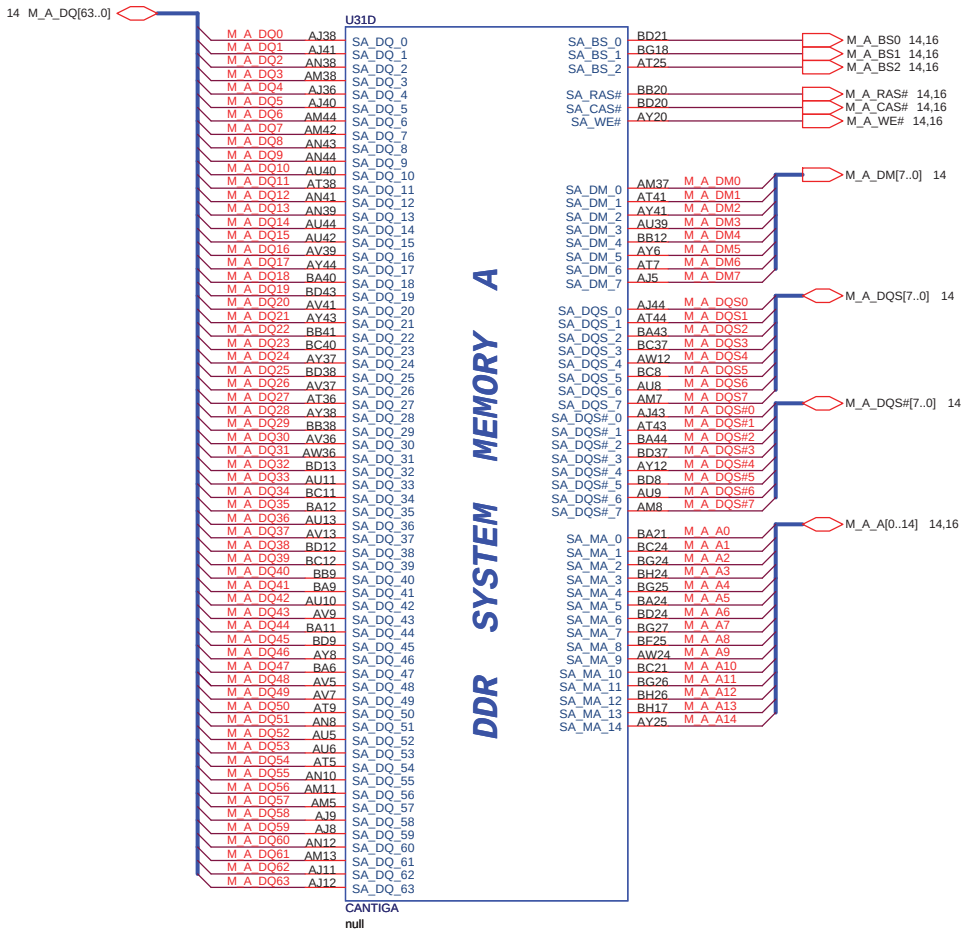

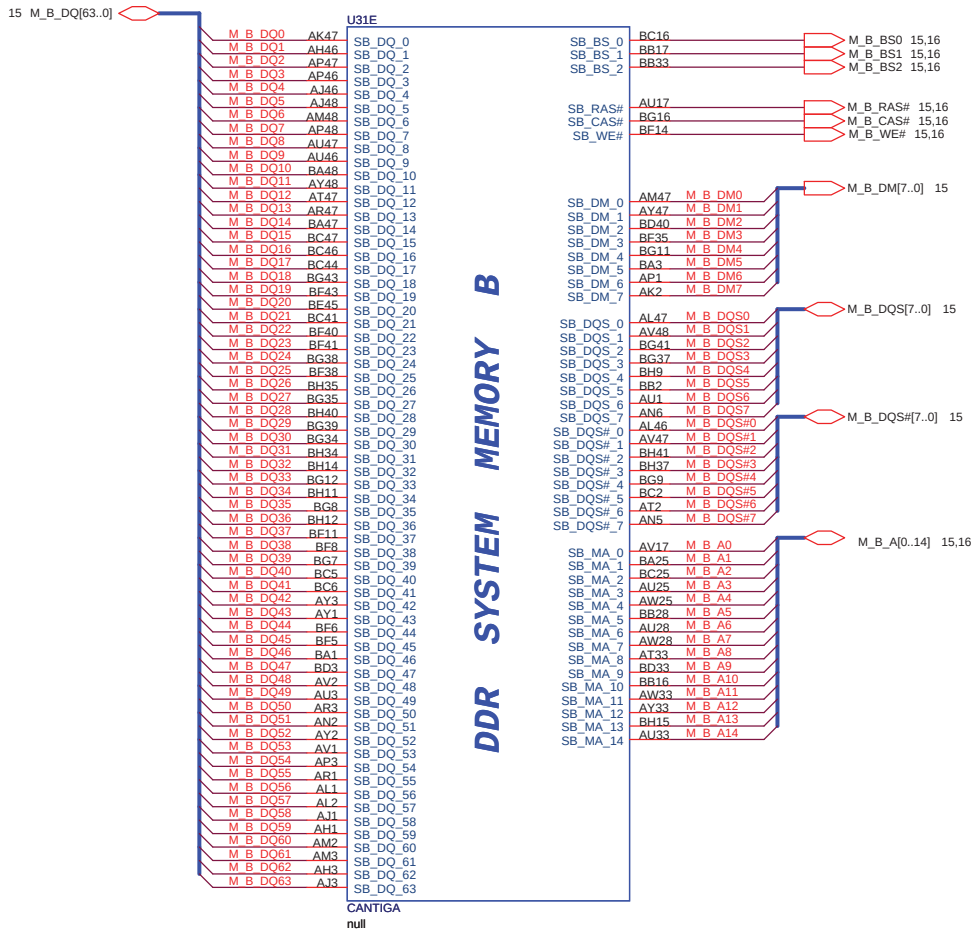

FOXCONN	HON HAI Precision Ind. Co., Ltd. CCPBG - R&D Division	
Title	Cantiga (DDRII) 4/7	
Size A3	Document Number M760	Rev 1.0
Date: Thursday, March 27, 2008	Sheet 10 of 89	

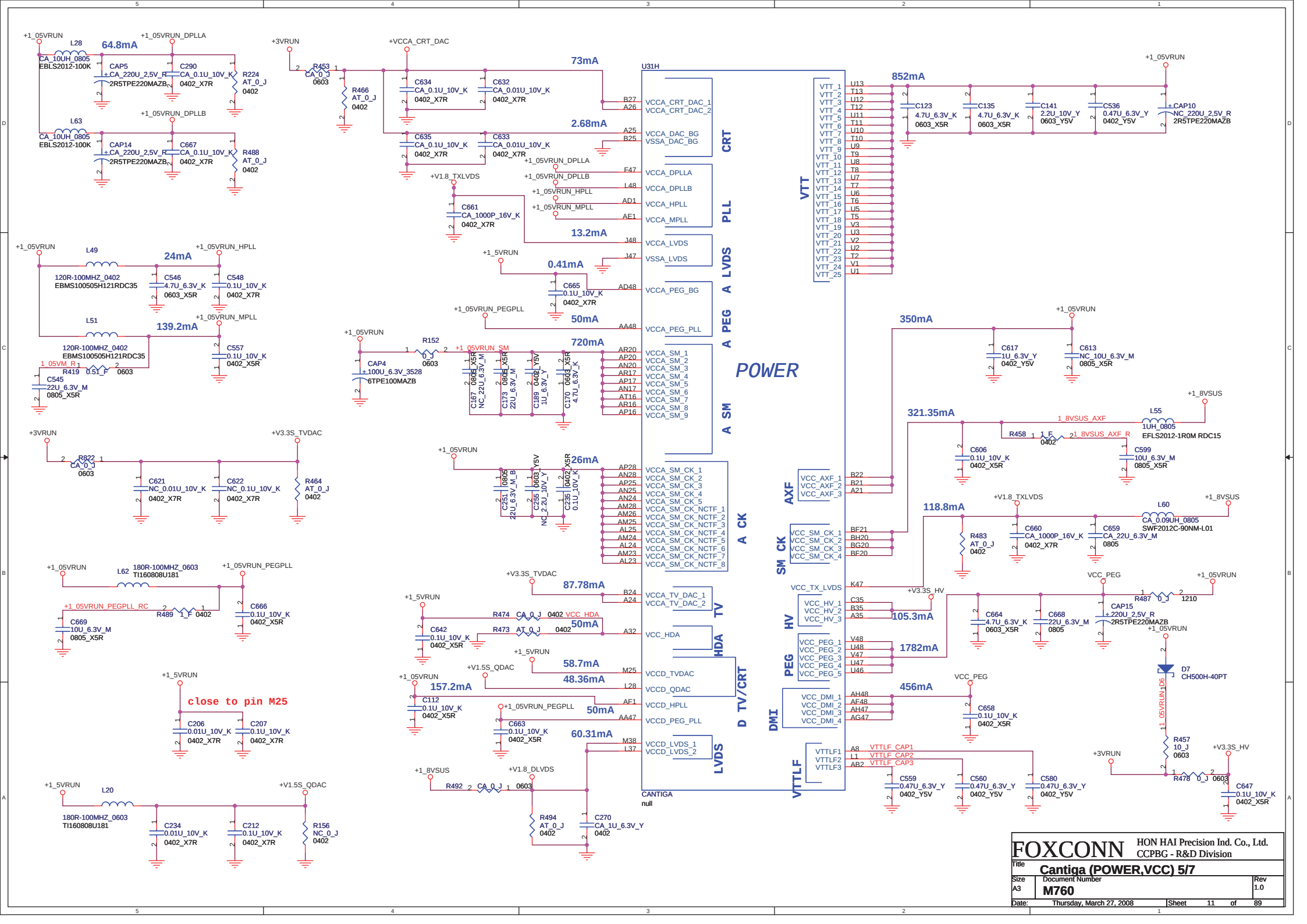
+1_05VRUN
L28
64.8mA
+1_05VRUN_DPLLA
CA_10UH_0805
EBLS2012-100K
CAP5
+CA_220U_2,5V_R
2R5TPE220MAZB
C290
CA_0.1U_10V_K
0402_X7R
R224
AT_0_J
0402
L63
+1_05VRUN_DPLLB
CA_10UH_0805
EBLS2012-100K
CAP14
+CA_220U_2,5V_R
2R5TPE220MAZB
C667
CA_0.1U_10V_K
0402_X7R
R488
AT_0_J
0402
+3VRUN
R453
CA_0_J
0603
R466
AT_0_J
0402
+VCCA_CRT_DAC
73mA
C634
CA_0.1U_10V_K
0402_X7R
C632
CA_0.01U_10V_K
0402_X7R
2.68mA
C635
CA_0.1U_10V_K
0402_X7R
C633
CA_0.01U_10V_K
0402_X7R
+1_05VRUN_DPLLA
+1_05VRUN_DPLLB
+1_05VRUN_HPLL
+1_05VRUN_MPLL
+V1.8_TXLVDS
C661
CA_1000P_16V_K
0402_X7R
13.2mA
+1_5VRUN
0.41mA
C665
0.1U_10V_K
0402_X7R
+1_05VRUN_PEGPLL
50mA
+1_05VRUN
R152
0_J
0603
CAP4
+100U_6.3V_3528
6TPE100MAZB
+1_05VRUN_SM
720mA
C167
0805_X5R
NC_22U_6.3V_M
C173
0805_X5R
22U_6.3V_M
C189
0402_Y5V
1U_6.3V_Y
C170
0603_X5R
4.7U_6.3V_K
+1_05VRUN
26mA
C251
0805
22U_6.3V_M_B
C255
0603_Y5V
NC_2.2U_10V_Y
C235
0402_X5R
0.1U_10V_K
+V3.3S_TVDAC
87.78mA
+1_5VRUN
R474
CA_0_J
0402
VCC_HDA
C642
0.1U_10V_K
0402_X5R
R473
AT_0_J
0402
50mA
+1_5VRUN
58.7mA
+V1.5S_QDAC
48.36mA
+1_05VRUN
157.2mA
C112
0.1U_10V_K
0402_X5R
+1_05VRUN_PEGPLL
50mA
C663
0.1U_10V_K
0402_X5R
60.31mA
+1_8VSUS
R492
CA_0_J
0603
+V1.8_DLVDS
R494
AT_0_J
0402
C270
CA_1U_6.3V_Y
0402
U31H
VCCA_CRT_DAC_1
VCCA_CRT_DAC_2
VCCA_DAC_BG
VSSA_DAC_BG
CRT
VCCA_DPLLA
VCCA_DPLLB
VCCA_HPLL
VCCA_MPLL
PLL
VCCA_LVDS
VSSA_LVDS
A LVDS
VCCA_PEG_BG
VCCA_PEG_PLL
A PEG
VCCA_SM_1
VCCA_SM_2
VCCA_SM_3
VCCA_SM_4
VCCA_SM_5
VCCA_SM_6
VCCA_SM_7
VCCA_SM_8
VCCA_SM_9
A SM
POWER
VCCA_SM_CK_1
VCCA_SM_CK_2
VCCA_SM_CK_3
VCCA_SM_CK_4
VCCA_SM_CK_5
VCCA_SM_CK_NCTF_1
VCCA_SM_CK_NCTF_2
VCCA_SM_CK_NCTF_3
VCCA_SM_CK_NCTF_4
VCCA_SM_CK_NCTF_5
VCCA_SM_CK_NCTF_6
VCCA_SM_CK_NCTF_7
VCCA_SM_CK_NCTF_8
A CK
VCCA_TV_DAC_1
VCCA_TV_DAC_2
TV
VCC_HDA
HDA
VCCD_TVDAC
VCCD_QDAC
VCCD_HPLL
VCCD_PEG_PLL
D TV/CRT
VCCD_LVDS_1
VCCD_LVDS_2
LVDS
CANTIGA
null
VTT_1
VTT_2
VTT_3
VTT_4
VTT_5
VTT_6
VTT_7
VTT_8
VTT_9
VTT_10
VTT_11
VTT_12
VTT_13
VTT_14
VTT_15
VTT_16
VTT_17
VTT_18
VTT_19
VTT_20
VTT_21
VTT_22
VTT_23
VTT_24
VTT_25
VTT
+1_05VRUN
852mA
C123
4.7U_6.3V_K
0603_X5R
C135
4.7U_6.3V_K
0603_X5R
C141
2.2U_10V_Y
0603_Y5V
C536
0.47U_6.3V_Y
0402_Y5V
CAP10
NC_220U_2,5V_R
2R5TPE220MAZB
+1_05VRUN
L49
24mA
120R-100MHZ_0402
EBMS100505H121RDC35
C546
4.7U_6.3V_K
0603_X5R
C548
0.1U_10V_K
0402_X7R
+1_05VRUN_HPLL
L51
139.2mA
120R-100MHZ_0402
EBMS100505H121RDC35
+1_05VRUN_MPLL
1_05VM_R
R419
0.51_F
0603
C545
22U_6.3V_M
0805_X5R
C557
0.1U_10V_K
0402_X5R
+3VRUN
R822
CA_0_J
0603
C621
NC_0.01U_10V_K
0402_X7R
C622
NC_0.1U_10V_K
0402_X7R
+V3.3S_TVDAC
R464
AT_0_J
0402
+1_05VRUN
L62
180R-100MHZ_0603
TI160808U181
+1_05VRUN_PEGPLL
+1_05VRUN_PEGPLL_RC
R489
1_F
0402
C666
0.1U_10V_K
0402_X5R
C669
10U_6.3V_M
0805_X5R
+1_5VRUN
close to pin M25
C206
0.01U_10V_K
0402_X7R
C207
0.1U_10V_K
0402_X7R
+1_5VRUN
L20
180R-100MHZ_0603
TI160808U181
C234
0.01U_10V_K
0402_X7R
C212
0.1U_10V_K
0402_X7R
+V1.5S_QDAC
R156
NC_0_J
0402
AXF
VCC_AXF_1
VCC_AXF_2
VCC_AXF_3
B22
B21
A21
SM CK
VCC_SM_CK_1
VCC_SM_CK_2
VCC_SM_CK_3
VCC_SM_CK_4
BF21
BH20
BG20
BF20
VCC_TX_LVDS
K47
HV
VCC_HV_1
VCC_HV_2
VCC_HV_3
C35
B35
A35
PEG
VCC_PEG_1
VCC_PEG_2
VCC_PEG_3
VCC_PEG_4
VCC_PEG_5
V48
U48
V47
U47
U46
DMI
VCC_DMI_1
VCC_DMI_2
VCC_DMI_3
VCC_DMI_4
AH48
AF48
AH47
AG47
VTTLF
VTTLF1
VTTLF2
VTTLF3
A8
L1
AB2
VTTLF_CAP1
VTTLF_CAP2
VTTLF_CAP3
C559
0.47U_6.3V_Y
0402_Y5V
C560
0.47U_6.3V_Y
0402_Y5V
C580
0.47U_6.3V_Y
0402_Y5V
350mA
C617
1U_6.3V_Y
0402_Y5V
C613
NC_10U_6.3V_M
0805_X5R
+1_8VSUS
321.35mA
1_8VSUS_AXF
L55
1UH_0805
EFLS2012-1R0M RDC15
R458
1_F
0402
1_8VSUS_AXF_R
C606
0.1U_10V_K
0402_X5R
C599
10U_6.3V_M
0805_X5R
+V1.8_TXLVDS
+1_8VSUS
118.8mA
L60
CA_0.09UH_0805
SWF2012C-90NM-L01
R483
AT_0_J
0402
C660
CA_1000P_16V_K
0402_X7R
C659
CA_22U_6.3V_M
0805
105.3mA
C664
4.7U_6.3V_K
0603_X5R
C668
22U_6.3V_M
0805
VCC_PEG
+1_05VRUN
R487
0_J
1210
CAP15
+220U_2,5V_R
2R5TPE220MAZB
1782mA
+1_05VRUN
D7
CH500H-40PT
456mA
VCC_PEG
C658
0.1U_10V_K
0402_X5R
+1_05VRUN
R457
10_J
0603
+3VRUN
+V3.3S_HV
R478
0_J
0603
C647
0.1U_10V_K
0402_X5R
FOXCONN
HON HAI Precision Ind. Co., Ltd.
CCPBG - R&D Division
Title
Cantiga (POWER,VCC) 5/7
Size
A3
Document Number
M760
Rev
1.0
Date:
Thursday, March 27, 2008
Sheet
11
of
89

3.06A W/E GFX
2.89A W/I GFX

U31F

+1_05VRUN

VCC CORE

POWER

VCC NCTF

CANTIGA
null

3A +1_8VSUS

U31G

VCC SM POWER

VCC GFX NCTF

+VGFX_GMCH

8.7A

VCC GFX

VCC SM LF

CANTIGA
null

26MIL TP46 1 VCC_AXG_SENSE
26MIL TP49 1 VSS_AXG_SENSE

CAP13 +220U_2,5V_R 2R5TPE220MAZB
308 mils from the Edge.
C230 22U_6.3V_M 0805_X5R
C218 0.22U_10V_Y 0402_Y5V
C217 0.22U_10V_Y 0402_Y5V
C233 0.1U_6.3V_K 0201_X5R
Cavity Capacitors

C249 0.1U_6.3V_K 0201_X5R
CAP12 +330U_2V_T EEFSX0D331ER
C241 22U_6.3V_M 0805_X5R
C646 22U_6.3V_M 0805_X5R
Place C249 where LVDS and DDR2 taps.
Place on the Edge.

C258 NC_0.1U_6.3V_K 0201_X5R
C195 NC_0.1U_6.3V_K 0201_X5R
C168 NC_0.1U_6.3V_K 0201_X5R
C159 NC_0.1U_6.3V_K 0201_X5R
C149 NC_0.1U_6.3V_K 0201_X5R

+CAP3 NC_CA_220U_2.5V_R 2R5TPE220MAZB
+CAP2 NC_CA_220U_2.5V_R 2R5TPE220MAZB
370 mils from the Edge.
C157 0402_Y5V CA_0.47U_6.3V_Y
C205 0402_X5R CA_1U_6.3V_M
C169 0805_X5R CA_10U_6.3V_M
C191 CA_22U_6.3V_M 0805
C160 0201_X5R CA_0.1U_6.3V_K
C186 0201_X5R CA_0.1U_6.3V_K
R138 0_J 0402
PJ4 OPEN_JUMP_OPEN2B
PJ3 OPEN_JUMP_OPEN2B

ADD GAP FROM INTERNAL GFX POWER

R186 0_J 0201 VCC_MCH_35

C153 0201_X5R 0.1U_6.3V_K
C137 0201_X5R 0.1U_6.3V_K
C128 0402_X5R 0.22U_6.3V_K
C192 0402_X5R 0.22U_6.3V_K
C274 0402_X7R 0.47U_6.3V_K
C292 0402_X5R 1U_6.3V_M
C288 0402_X5R 1U_6.3V_M

FOXCONN HON HAI Precision Ind. Co., Ltd.
CCPBG - R&D Division

Title	Cantiga (VCC CORE) 6/7	
Size A3	Document Number M760	Rev 1.0
Date: Thursday, March 27, 2008	Sheet 12 of 89	

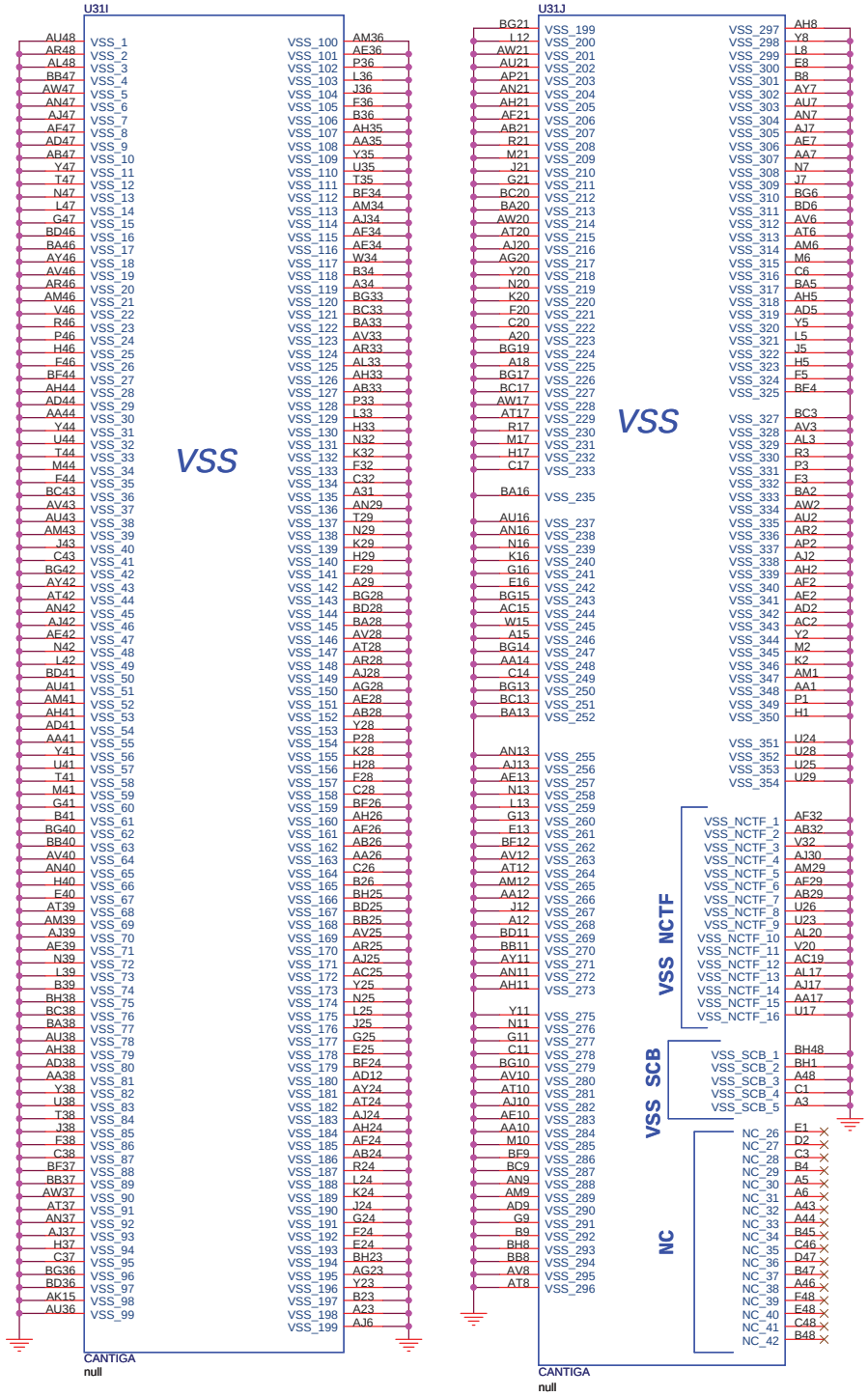

FOXCONN	HON HAI Precision Ind. Co., Ltd. CCPBG - R&D Division	
Title	Cantiga (VSS) 7/7	
Size A3	Document Number M760	Rev 1.0
Date: Thursday, March 27, 2008	Sheet 13 of 89	

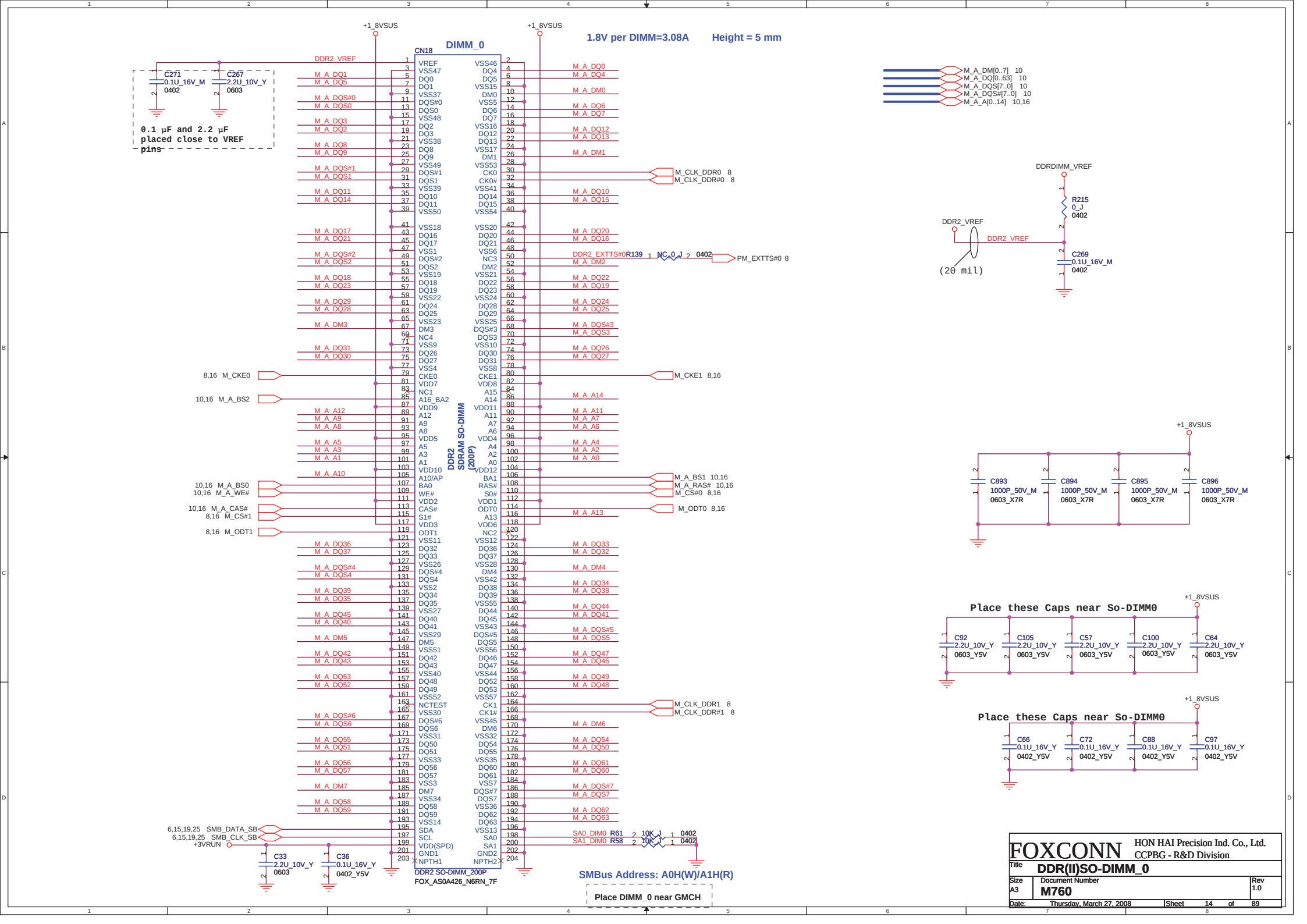
DIMM_0
CN18
1.8V per DIMM=3.08A
Height = 5 mm
+1_8VSUS
DDR2_VREF
C271 0.1U_16V_M 0402
C267 2.2U_10V_Y 0603
0.1 µF and 2.2 µF placed close to VREF pins
DDR2 SDRAM SO-DIMM (200P)
DDR2 SO-DIMM_200P
FOX_AS0A426_N6RN_7F
M_A_DM[0..7] 10
M_A_DQ[0..63] 10
M_A_DQS[7..0] 10
M_A_DQS#[7..0] 10
M_A_A[0..14] 10,16
DDRDIMM_VREF
R215 0_J 0402
C269 0.1U_16V_M 0402
(20 mil)
C893 1000P_50V_M 0603_X7R
C894 1000P_50V_M 0603_X7R
C895 1000P_50V_M 0603_X7R
C896 1000P_50V_M 0603_X7R
Place these Caps near So-DIMM0
C92 2.2U_10V_Y 0603_Y5V
C105 2.2U_10V_Y 0603_Y5V
C57 2.2U_10V_Y 0603_Y5V
C100 2.2U_10V_Y 0603_Y5V
C64 2.2U_10V_Y 0603_Y5V
Place these Caps near So-DIMM0
C66 0.1U_16V_Y 0402_Y5V
C72 0.1U_16V_Y 0402_Y5V
C88 0.1U_16V_Y 0402_Y5V
C97 0.1U_16V_Y 0402_Y5V
C33 2.2U_10V_Y 0603
C36 0.1U_16V_Y 0402_Y5V
SMBus Address: A0H(W)/A1H(R)
Place DIMM_0 near GMCH
FOXCONN
HON HAI Precision Ind. Co., Ltd.
CCPBG - R&D Division
Title DDR(II)SO-DIMM_0
Size A3
Document Number M760
Rev 1.0
Date: Thursday, March 27, 2008
Sheet 14 of 89

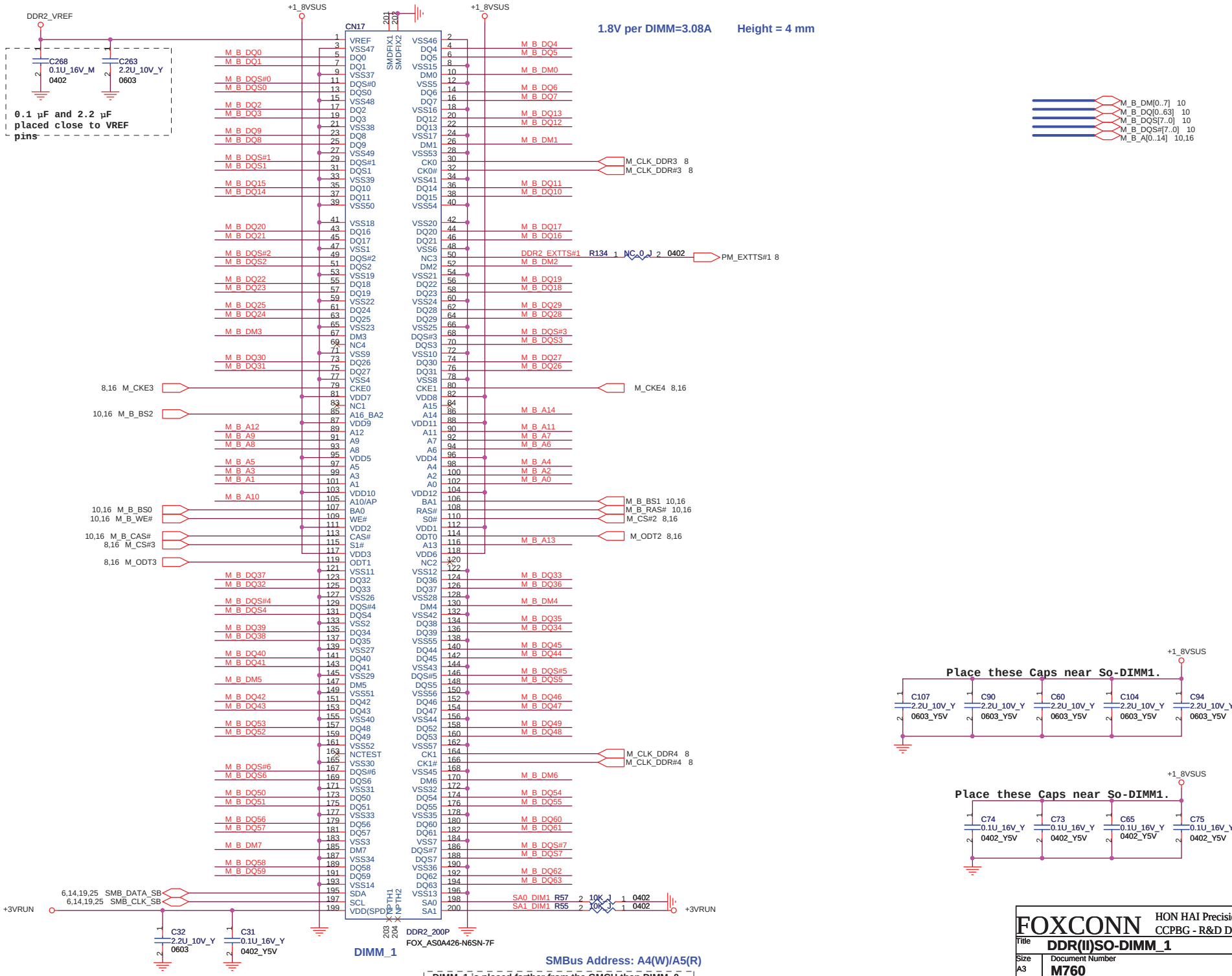

FOXCONN HON HAI Precision Ind. Co., Ltd. CCPBG - R&D Division

Title: DDR(II)SO-DIMM_1

Size	Document Number	Rev
A3	M760	1.0

Date: Thursday, March 27, 2008 Sheet 15 of 89

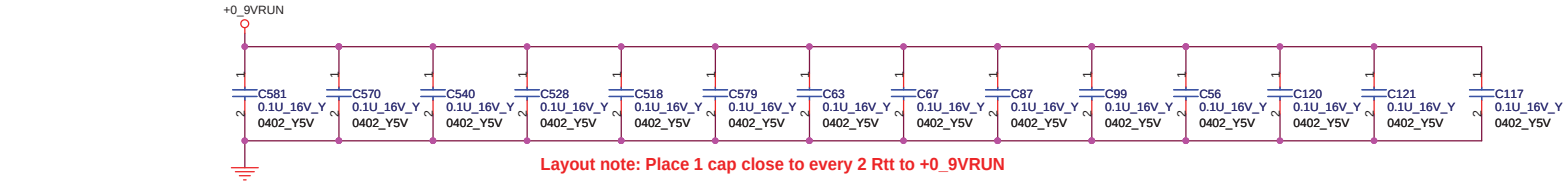

Layout note: Place 1 cap close to every 2 Rtt to +0_9VRUN

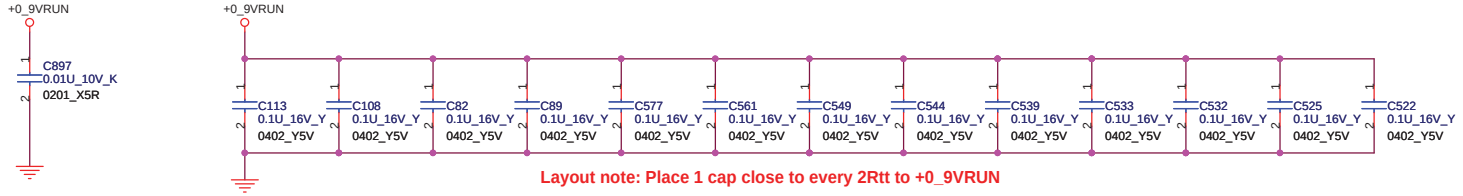

Layout note: Place 1 cap close to every 2Rtt to +0_9VRUN

10,14 M_A_A[0..14]

10,15 M_B_A[0..14]

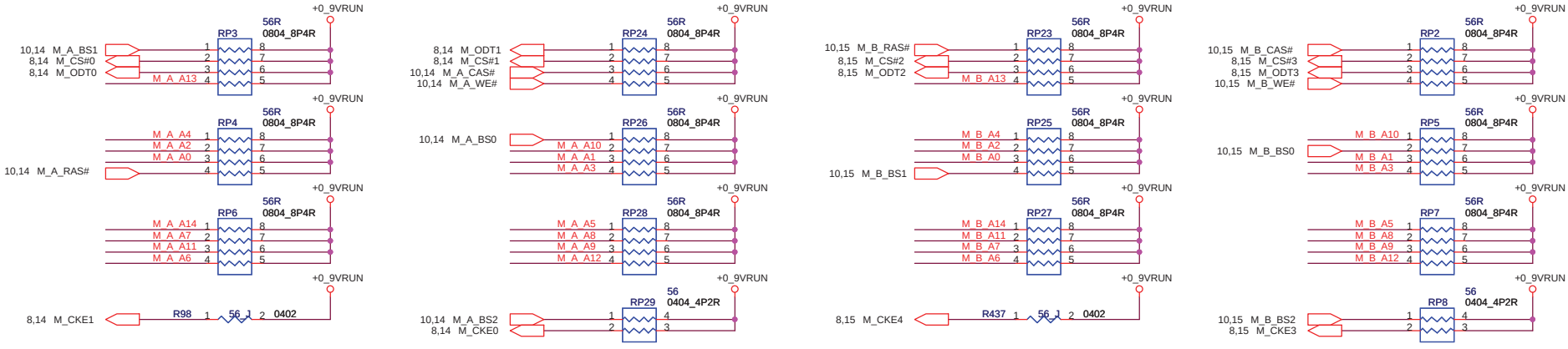

FOXCONN HON HAI Precision Ind. Co., Ltd.
CCPBG - R&D Division

Title: DDR(II)Termination		
Size: A3	Document Number: M760	Rev: 1.0
Date: Thursday, March 27, 2008	Sheet 16 of 89	

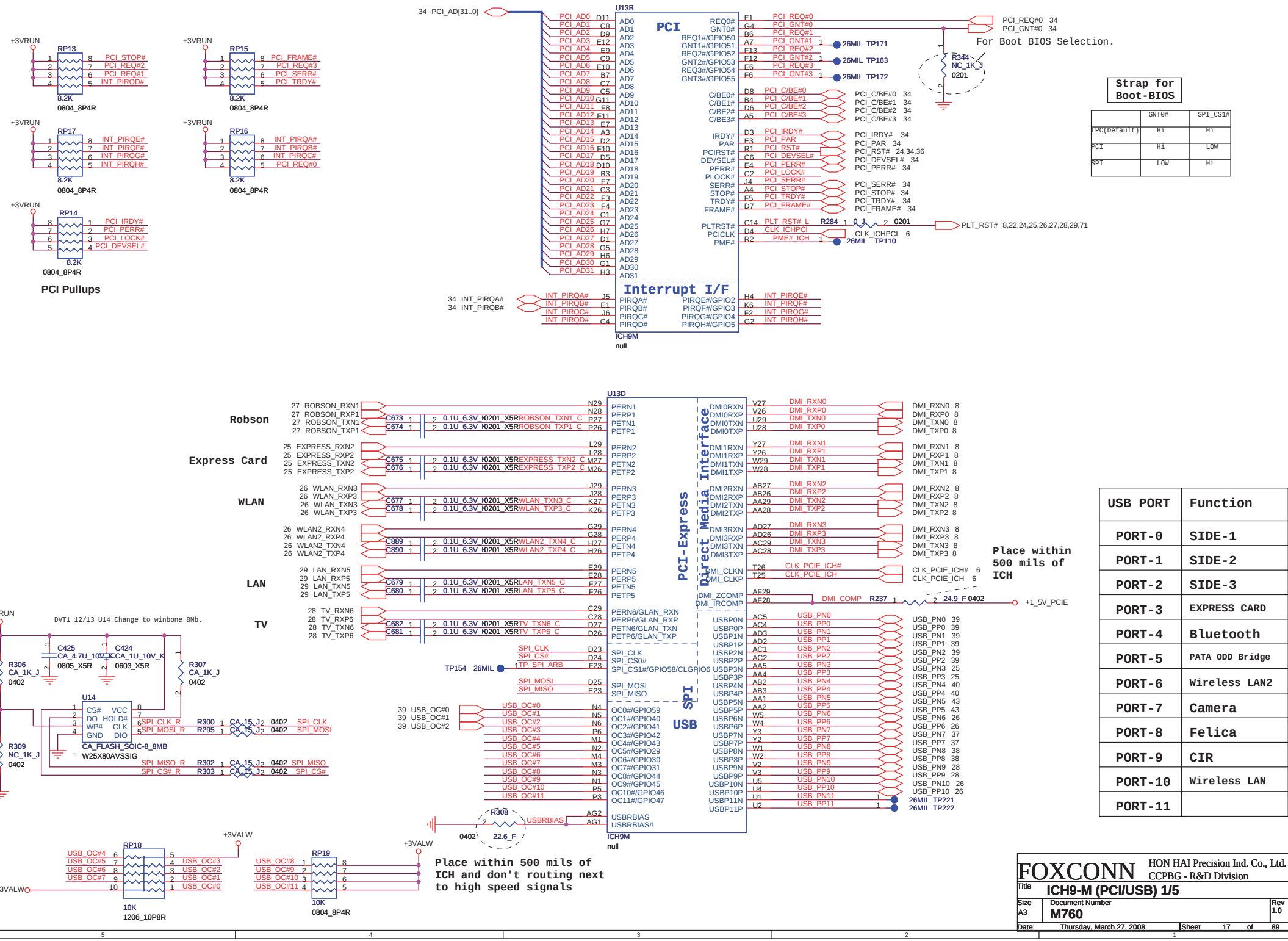

USB PORT	Function
PORT-0	SIDE-1
PORT-1	SIDE-2
PORT-2	SIDE-3
PORT-3	EXPRESS CARD
PORT-4	Bluetooth
PORT-5	PATA ODD Bridge
PORT-6	Wireless LAN2
PORT-7	Camera
PORT-8	Felica
PORT-9	CIR
PORT-10	Wireless LAN
PORT-11	

FOXCONN
HON HAI Precision Ind. Co., Ltd.
CCPBG - R&D Division

Title	ICH9-M (PCI/USB) 1/5	
Size A3	Document Number M760	Rev 1.0
Date: Thursday, March 27, 2008	Sheet 17 of 89	

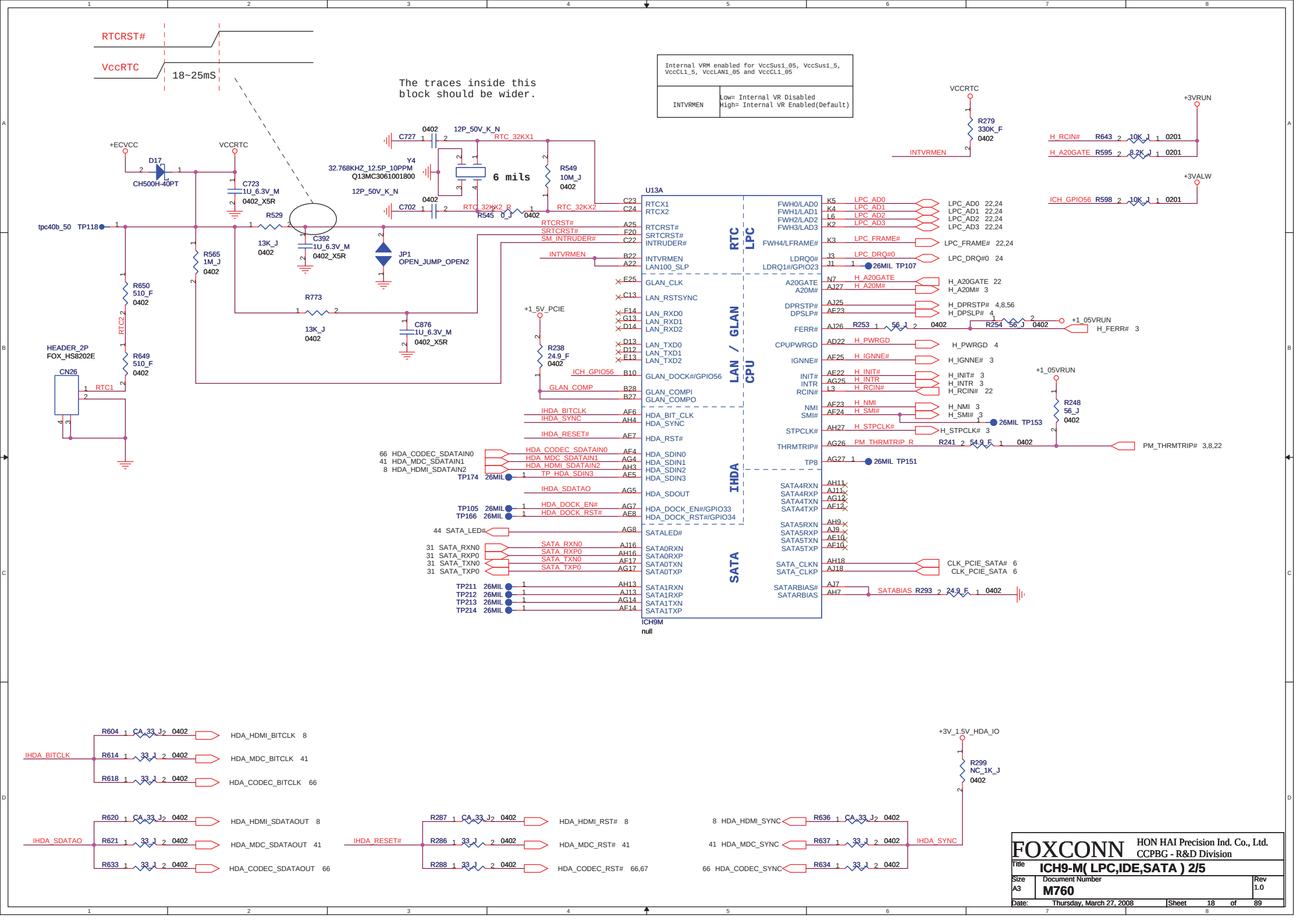
RTCRST#
VccRTC
18~25mS
The traces inside this block should be wider.
Internal VRM enabled for VccSus1_05, VccSus1_5, VccCL1_5, VccLAN1_05 and VccCL1_05
INTVRMEN
Low= Internal VR Disabled
High= Internal VR Enabled(Default)
U13A
ICH9M
null
RTC
LPC
LAN / GLAN
CPU
IHDA
SATA
6 mils
32.768KHZ_12.5P_10PPM
Q13MC3061001800
CH500H-40PT
HEADER_2P
FOX_HS8202E
CN26
JP1
OPEN_JUMP_OPEN2
FOXCONN
HON HAI Precision Ind. Co., Ltd.
CCPBG - R&D Division
ICH9-M(LPC,IDE,SATA) 2/5
M760
Thursday, March 27, 2008

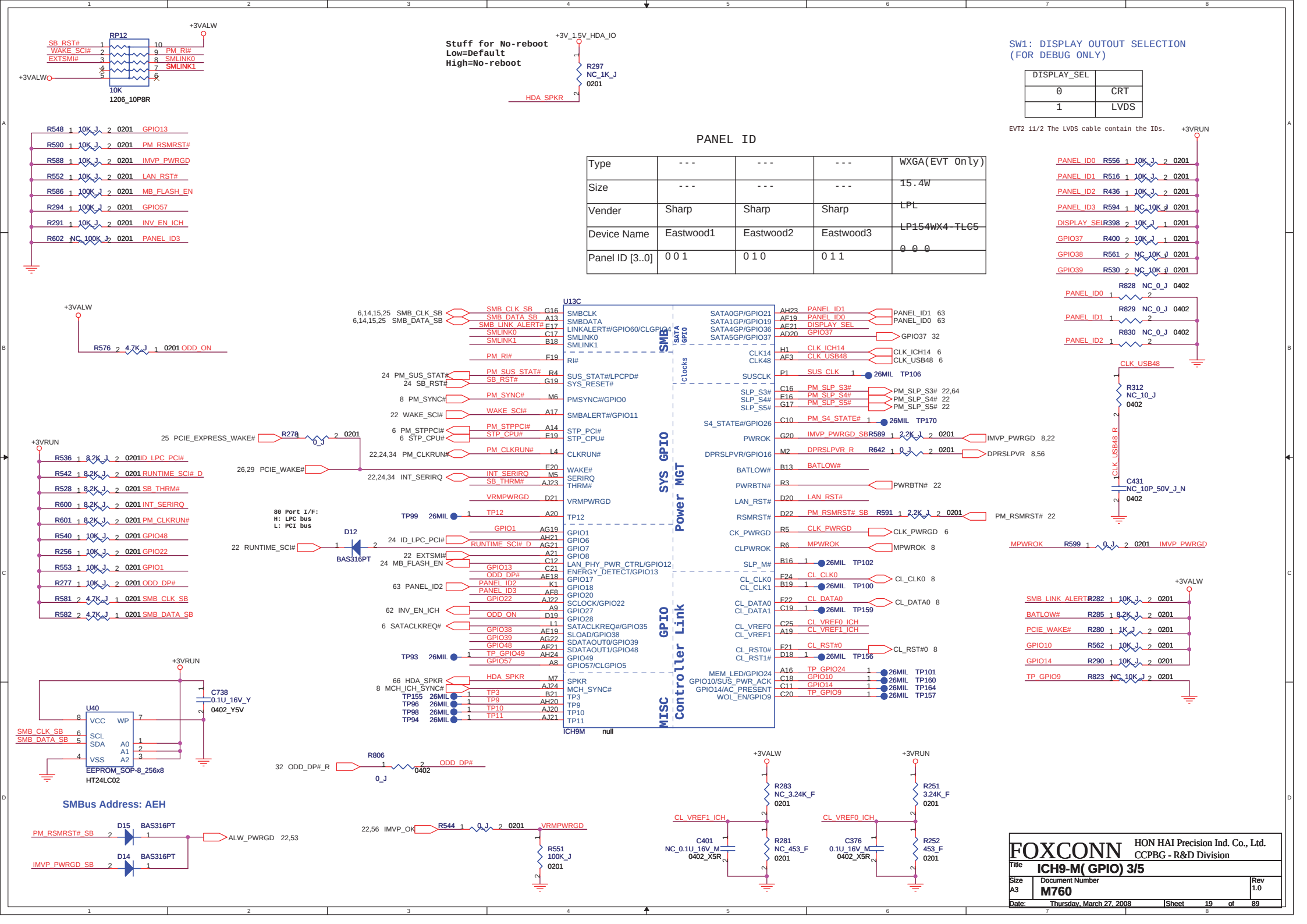

Stuff for No-reboot
Low=Default
High=No-reboot
SW1: DISPLAY OUTOUT SELECTION
(FOR DEBUG ONLY)
DISPLAY_SEL
0 CRT
1 LVDS
EVT2 11/2 The LVDS cable contain the IDs.
PANEL ID
Type --- --- --- WXGA(EVT Only)
Size --- --- --- 15.4W
Vender Sharp Sharp Sharp LPL
Device Name Eastwood1 Eastwood2 Eastwood3 LP154WX4-TLC5
Panel ID [3..0] 0 0 1 0 1 0 0 1 1 0 0 0
U13C
ICH9M null
SYS GPIO
Power MGT
GPIO
Controller Link
MISC
SMB
SATA GPIO
Clocks
U40
EEPROM_SOP-8_256x8
HT24LC02
SMBus Address: AEH
80 Port I/F:
H: LPC bus
L: PCI bus
FOXCONN
HON HAI Precision Ind. Co., Ltd.
CCPBG - R&D Division
Title ICH9-M(GPIO) 3/5
Size A3
Document Number M760
Rev 1.0
Date: Thursday, March 27, 2008
Sheet 19 of 89

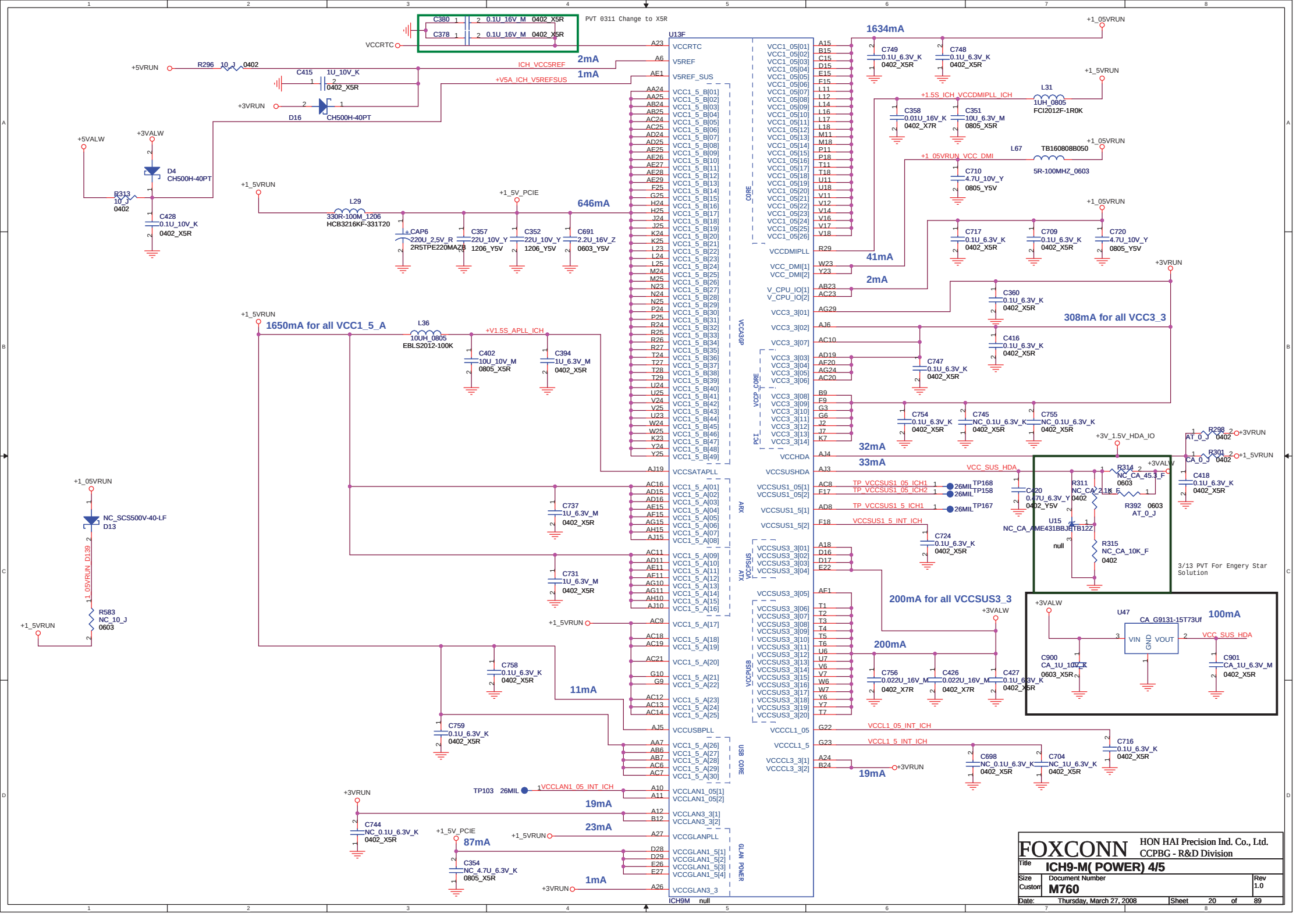
PVT 0311 Change to X5R
C380 0.1U_16V_M 0402_X5R
C378 0.1U_16V_M 0402_X5R
VCCRTC
U13F
VCCRTC
V5REF
V5REF_SUS
ICH_VCC5REF
2mA
1mA
+V5A_ICH_V5REFSUS
+5VRUN
R296 10_J 0402
C415 1U_10V_K 0402_X5R
+3VRUN
D16 CH500H-40PT
+5VALW
+3VALW
D4 CH500H-40PT
R313 10_J 0402
C428 0.1U_10V_K 0402_X5R
+1_5VRUN
L29 330R-100M_1206 HCB3216KF-331T20
+1_5V_PCIE
646mA
+CAP6 220U_2,5V_R 2R5TPE220MAZB
C357 22U_10V_Y 1206_Y5V
C352 22U_10V_Y 1206_Y5V
C691 2.2U_16V_Z 0603_Y5V
CORE
1650mA for all VCC1_5_A
L36 10UH_0805 EBLS2012-100K
+V1.5S_APLL_ICH
C402 10U_10V_M 0805_X5R
C394 1U_6.3V_M 0402_X5R
VCA36P
C737 1U_6.3V_M 0402_X5R
C731 1U_6.3V_M 0402_X5R
ARX
VCCSUS
ATX
+1_05VRUN
NC_SCS500V-40-LF D13
+1_05VRUN_D139
R583 NC_10_J 0603
C758 0.1U_6.3V_K 0402_X5R
11mA
C759 0.1U_6.3V_K 0402_X5R
USB CORE
TP103 26MIL
1VCCLAN1_05_INT_ICH
19mA
C744 NC_0.1U_6.3V_K 0402_X5R
+1_5V_PCIE
87mA
C354 NC_4.7U_6.3V_K 0805_X5R
+1_5VRUN
23mA
1mA
GLAN POWER
ICH9M null
VCCDMIPLL
VCC_DMI[1]
VCC_DMI[2]
V_CPU_IO[1]
V_CPU_IO[2]
VCC3_3[1]
VCC3_3[2]
VCC3_3[7]
VCC3_3[3]
VCC3_3[4]
VCC3_3[5]
VCC3_3[6]
VCC3_3[8]
VCC3_3[9]
VCC3_3[10]
VCC3_3[11]
VCC3_3[12]
VCC3_3[13]
VCC3_3[14]
VCP_CORE
PCI
VCCHDA
VCCSUSHDA
VCCSUS1_05[1]
VCCSUS1_05[2]
VCCSUS1_5[1]
VCCSUS1_5[2]
VCCSUS3_3[1]
VCCSUS3_3[2]
VCCSUS3_3[3]
VCCSUS3_3[4]
VCCSUS3_3[5]
VCCSUS3_3[6]
VCCSUS3_3[7]
VCCSUS3_3[8]
VCCSUS3_3[9]
VCCSUS3_3[10]
VCCSUS3_3[11]
VCCSUS3_3[12]
VCCSUS3_3[13]
VCCSUS3_3[14]
VCCSUS3_3[15]
VCCSUS3_3[16]
VCCSUS3_3[17]
VCCSUS3_3[18]
VCCSUS3_3[19]
VCCSUS3_3[20]
VCCSUS3
VCCPUSB
VCCCL1_05
VCCCL1_5
VCCCL3_3[1]
VCCCL3_3[2]
1634mA
C749 0.1U_6.3V_K 0402_X5R
C748 0.1U_6.3V_K 0402_X5R
+1.5S_ICH_VCCDMIPLL_ICH
L31 1UH_0805 FCI2012F-1R0K
C358 0.01U_16V_K 0402_X7R
C351 10U_6.3V_M 0805_X5R
+1_05VRUN_VCC_DMI
L67 TB160808B050 5R-100MHZ_0603
C710 4.7U_10V_Y 0805_Y5V
41mA
C717 0.1U_6.3V_K 0402_X5R
C709 0.1U_6.3V_K 0402_X5R
C720 4.7U_10V_Y 0805_Y5V
2mA
C360 0.1U_6.3V_K 0402_X5R
308mA for all VCC3_3
C416 0.1U_6.3V_K 0402_X5R
C747 0.1U_6.3V_K 0402_X5R
C754 0.1U_6.3V_K 0402_X5R
C745 NC_0.1U_6.3V_K 0402_X5R
C755 NC_0.1U_6.3V_K 0402_X5R
32mA
33mA
+3V_1.5V_HDA_IO
VCC_SUS_HDA
TP_VCCSUS1_05_ICH1
TP_VCCSUS1_05_ICH2
TP_VCCSUS1_5_ICH1
TP168 TP158 TP167
26MIL
C420 0.47U_6.3V_Y 0402_Y5V
R311 NC_CA_2.21K_F 0603
R314 NC_CA_45.3_F 0603
R392 0603 AT_0_J
U15 NC_CA_AME431BBJETB12Z
R315 NC_CA_10K_F 0402
R298 AT_0_J 0402
R301 CA_0_J 0402
C418 0.1U_6.3V_K 0402_X5R
3/13 PVT For Engery Star Solution
VCCSUS1_5_INT_ICH
C724 0.1U_6.3V_K 0402_X5R
200mA for all VCCSUS3_3
200mA
C756 0.022U_16V_M 0402_X7R
C426 0.022U_16V_M 0402_X7R
C427 0.1U_6.3V_K 0402_X5R
100mA
U47 CA_G9131-15T73Uf
VIN GND VOUT
C900 CA_1U_10V_K 0603_X5R
C901 CA_1U_6.3V_M 0402_X5R
VCCL1_05_INT_ICH
VCCL1_5_INT_ICH
C716 0.1U_6.3V_K 0402_X5R
C698 NC_0.1U_6.3V_K 0402_X5R
C704 NC_1U_6.3V_K 0402_X5R
19mA
FOXCONN
HON HAI Precision Ind. Co., Ltd.
CCPBG - R&D Division
Title ICH9-M(POWER) 4/5
Size Custom
Document Number M760
Rev 1.0
Date: Thursday, March 27, 2008
Sheet 20 of 89

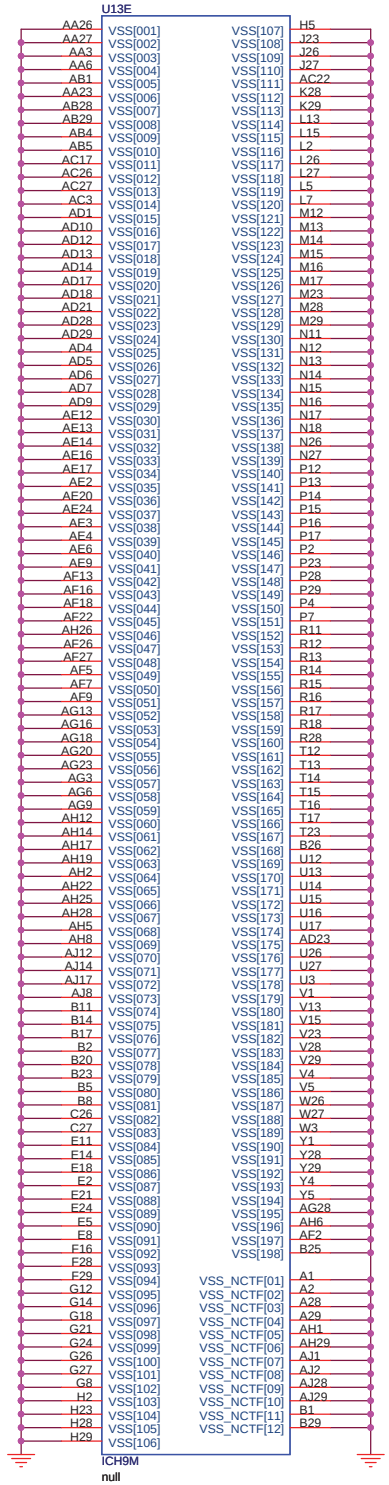

FOXCONN	HON HAI Precision Ind. Co., Ltd. CCPBG - R&D Division	
Title	ICH9-M(GND) 5/5	
Size A3	Document Number M760	Rev 1.0
Date: Thursday, March 27, 2008	Sheet 21 of 89	

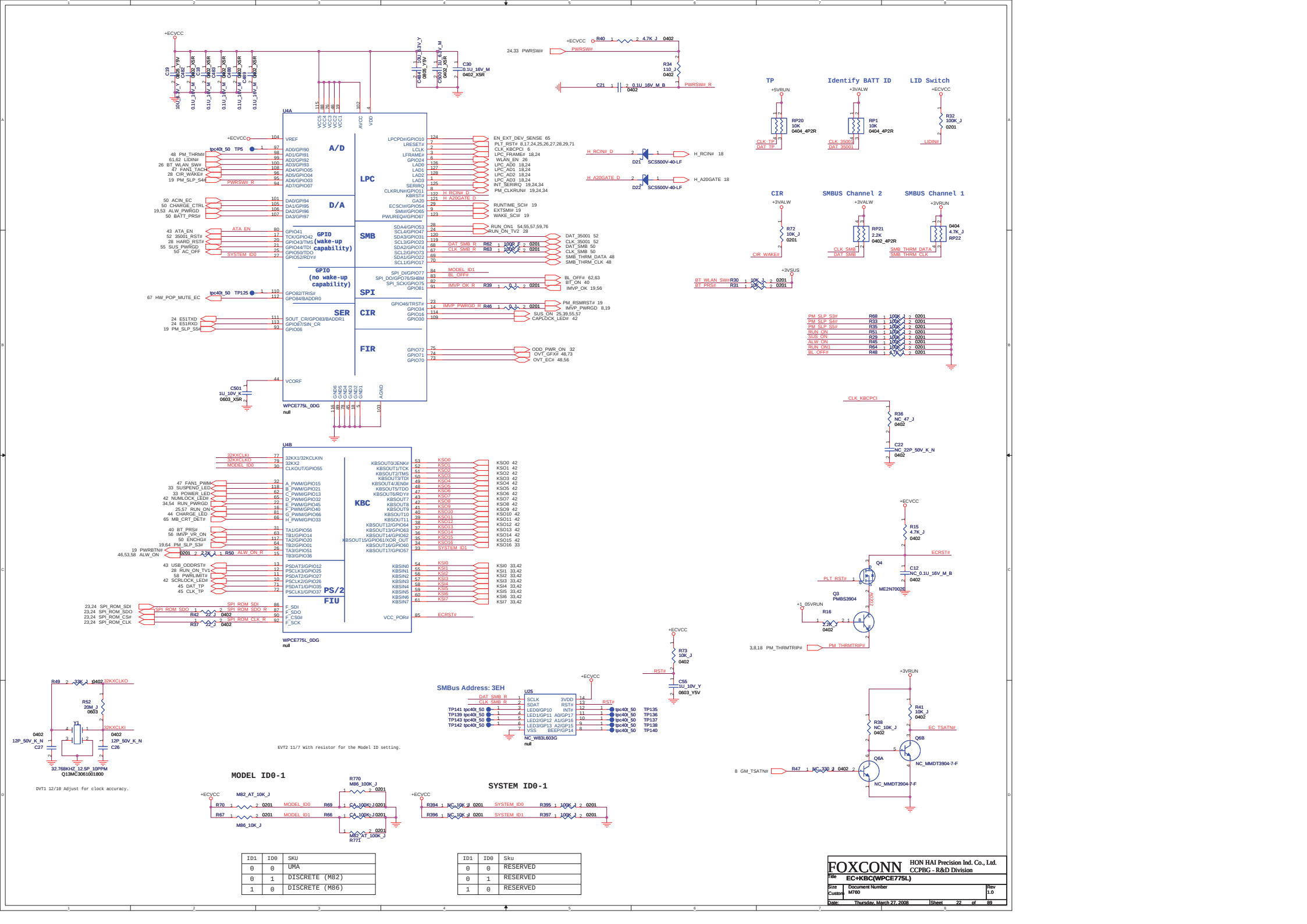
U4A
WPCE775L_0DG
null
A/D
D/A
GPIO
(wake-up capability)
SMB
SPI
SER
CIR
FIR
LPC
U4B
KBC
PS/2
FIU
WPCE775L_0DG
null
TP
Identify BATT ID
LID Switch
CIR
SMBUS Channel 2
SMBUS Channel 1
SMBus Address: 3EH
U25
NC_W83L603G
null
MODEL ID0-1
SYSTEM ID0-1
EVT2 11/7 With resistor for the Model ID setting.
DVT1 12/10 Adjust for clock accuracy.
ID1 ID0 SKU
0 0 UMA
0 1 DISCRETE (M82)
1 0 DISCRETE (M86)
ID1 ID0 Sku
0 0 RESERVED
0 1 RESERVED
1 0 RESERVED
FOXCONN
HON HAI Precision Ind. Co., Ltd.
CCPBG - R&D Division
Title EC+KBC(WPCE775L)
Size Custom
Document Number M760
Rev 1.0
Date: Thursday, March 27, 2008
Sheet 22 of 89

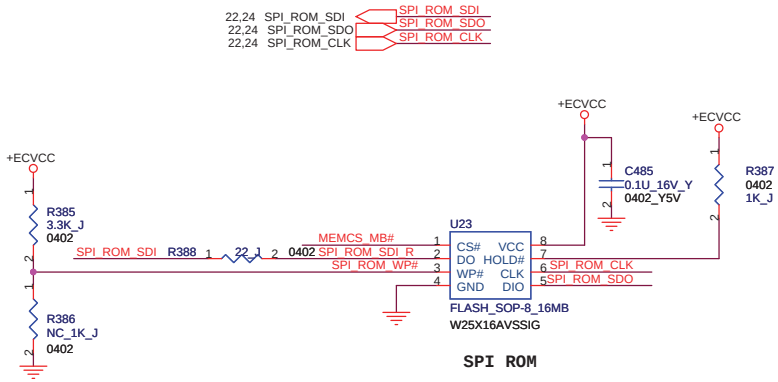

SPI ROM

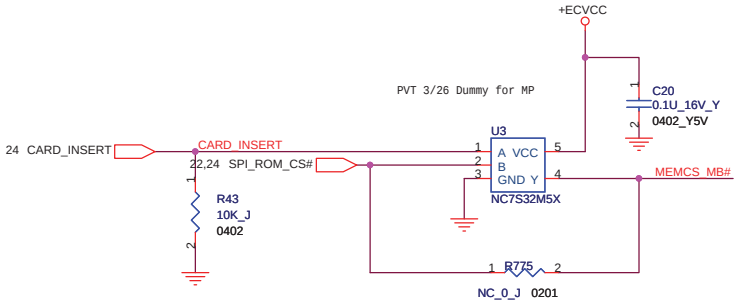

FOXCONN	HON HAI Precision Ind. Co., Ltd. CCPBG - R&D Division	
Title: SPI Flash ROM		
Size: A3	Document Number: M760	Rev: 1.0
Date: Thursday, March 27, 2008	Sheet 23 of 89	

PVT 3/26 Dummy for MP

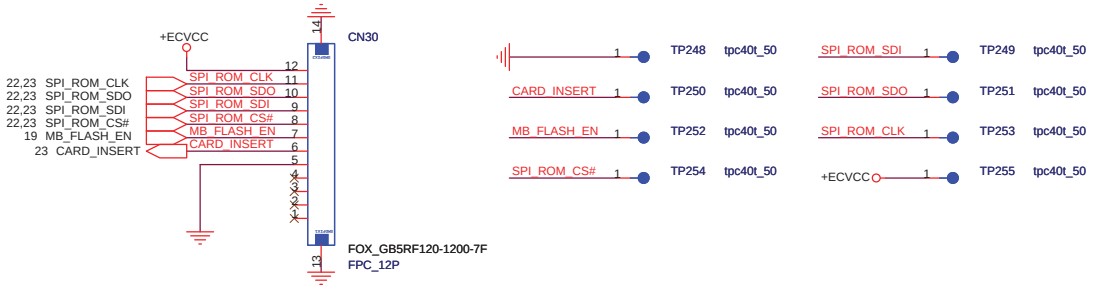

EXTERNAL SPI ROM INTERFACE

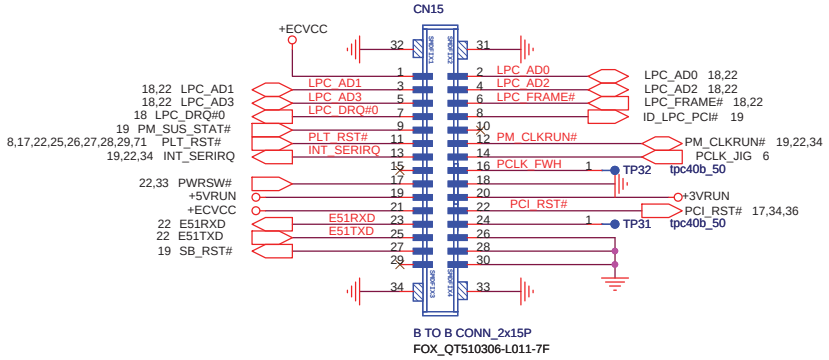

JIG-120

FOXCONN	HON HAI Precision Ind. Co., Ltd. CCPBG - R&D Division	
Title: Debug Port		
Size: A3	Document Number: M760	Rev: 1.0
Date: Thursday, March 27, 2008	Sheet 24 of 89	

+1_5V=>0.65A
+3_3VAux=>0.275A
+3_3V=>1.3A

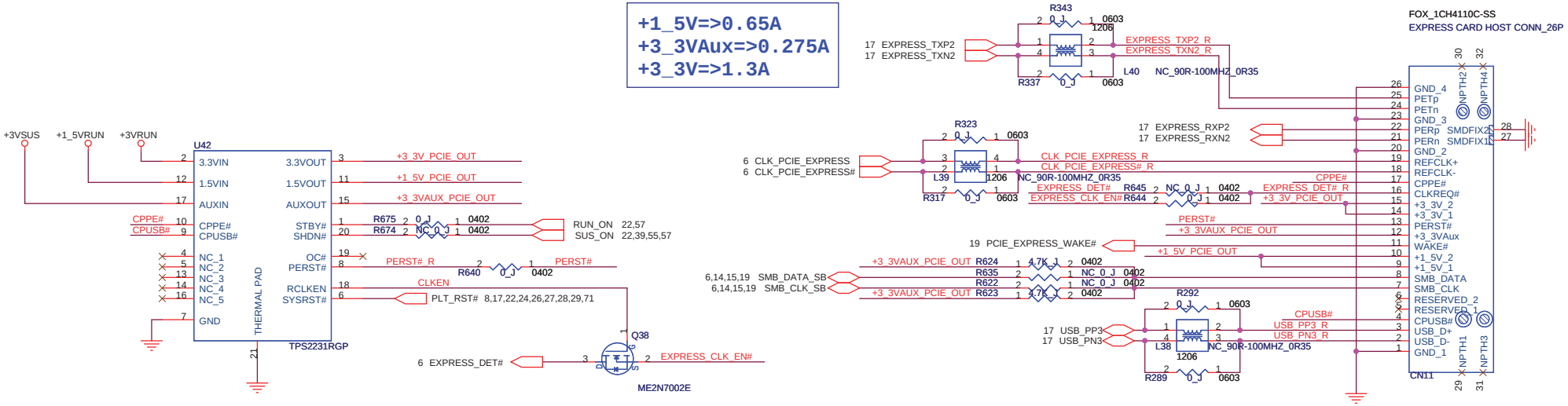

Express Card Slot.

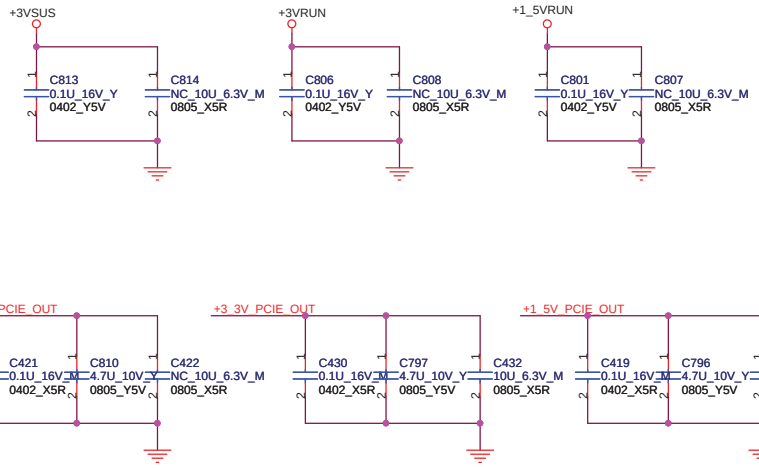

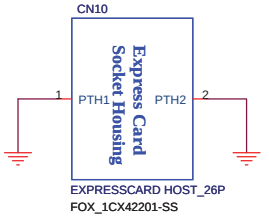

Express Card Housing.

FOXCONN	HON HAI Precision Ind. Co., Ltd. CCPBG - R&D Division	
Title: EXPRESS CARD		
Size: A3	Document Number: M760	Rev: 1.0
Date: Thursday, March 27, 2008	Sheet 25 of 89	

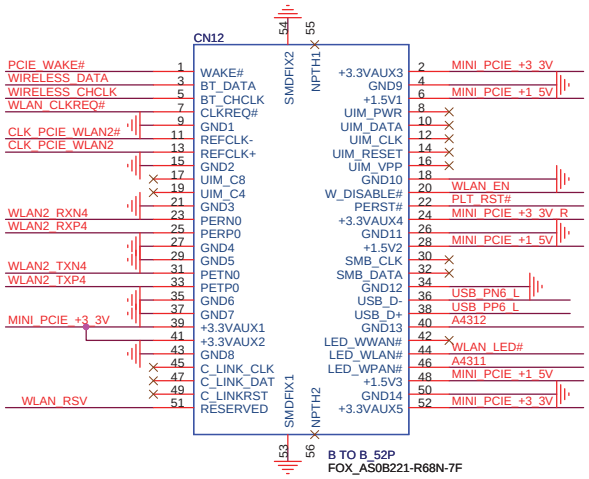

Half Size Mini Card

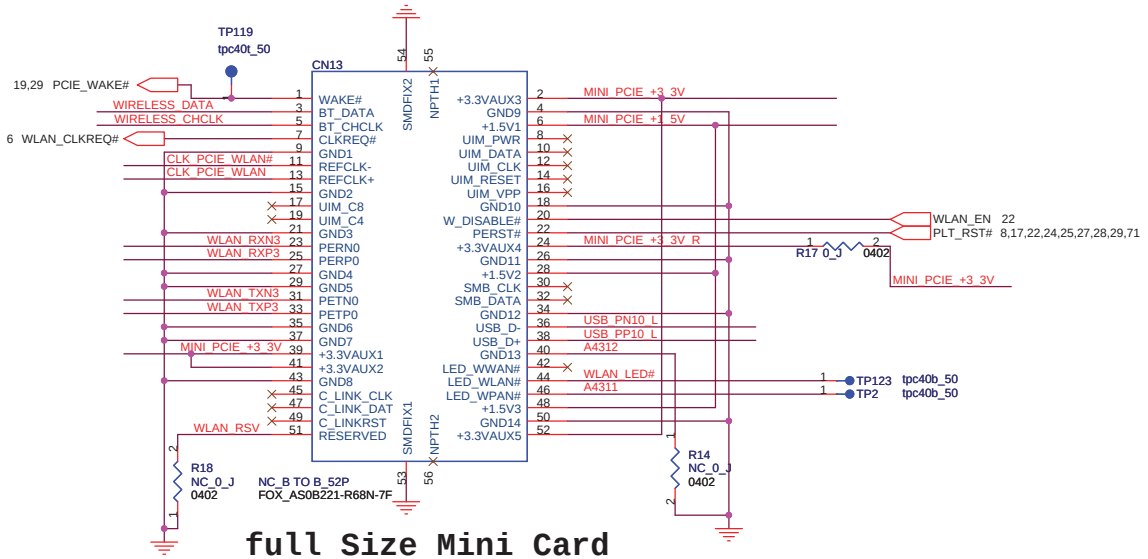

full Size Mini Card

6 CLK_PCIE_WLAN#
6 CLK_PCIE_WLAN
17 WLAN_RXN3
17 WLAN_RXP3
17 WLAN_TXN3
17 WLAN_TXP3

6 CLK_PCIE_WLAN2#
6 CLK_PCIE_WLAN2
17 WLAN2_RXN4
17 WLAN2_RXP4
17 WLAN2_TXN4
17 WLAN2_TXP4

WLAN Switch

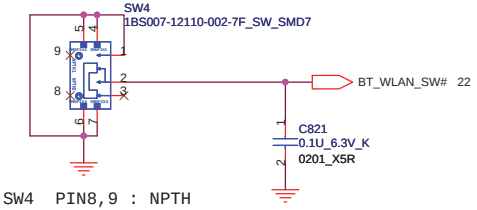

SW4 PIN8,9 : NPTH

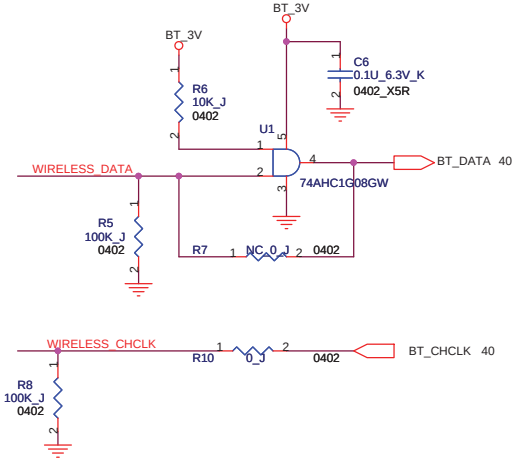

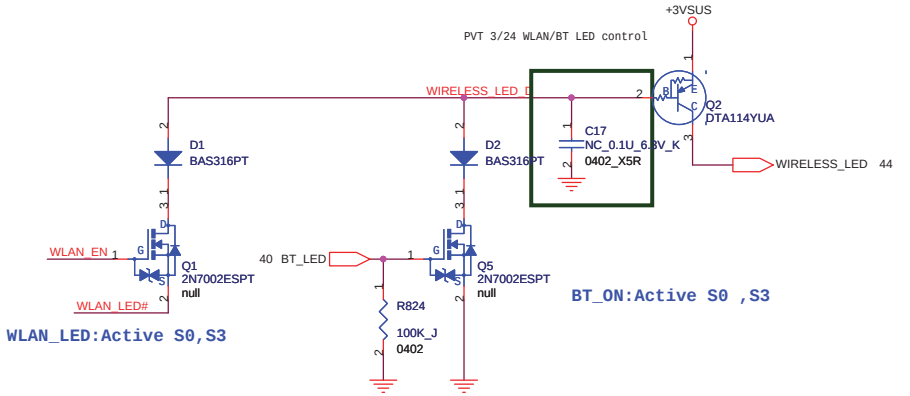

WLAN_LED:Active S0,S3

BT_ON:Active S0 ,S3

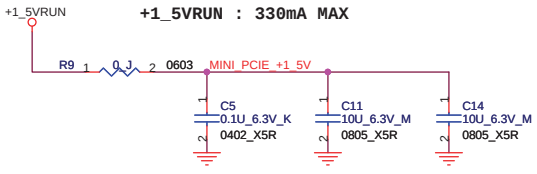

+1_5VRUN : 330mA MAX

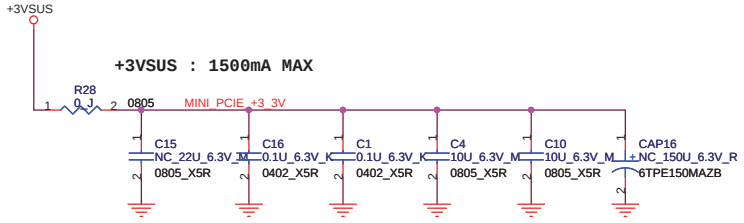

+3VSUS : 1500mA MAX

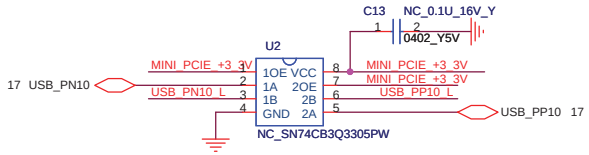

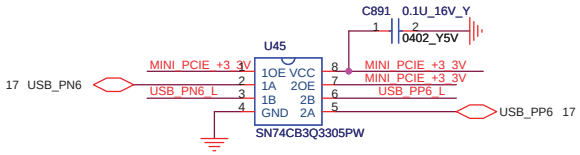

Dummy R17,R9,C5,C11,C14 when use Echo Peak and Shirley Peak

FOXCONN	HON HAI Precision Ind. Co., Ltd. CCPBG - R&D Division	
Title	Mini-PCIE Card (WLAN)	
Size A3	Document Number M760	Rev 1.0
Date: Thursday, March 27, 2008	Sheet 26 of 89	

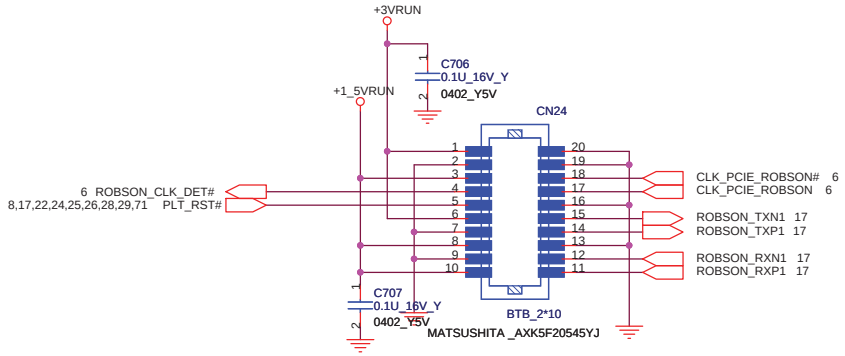

Robson 1.6 Module

FOXCONN	HON HAI Precision Ind. Co., Ltd. CCPBG - R&D Division	
Title	Robson2	
Size A3	Document Number M760	Rev 1.0
Date: Thursday, March 27, 2008	Sheet 27 of 89	

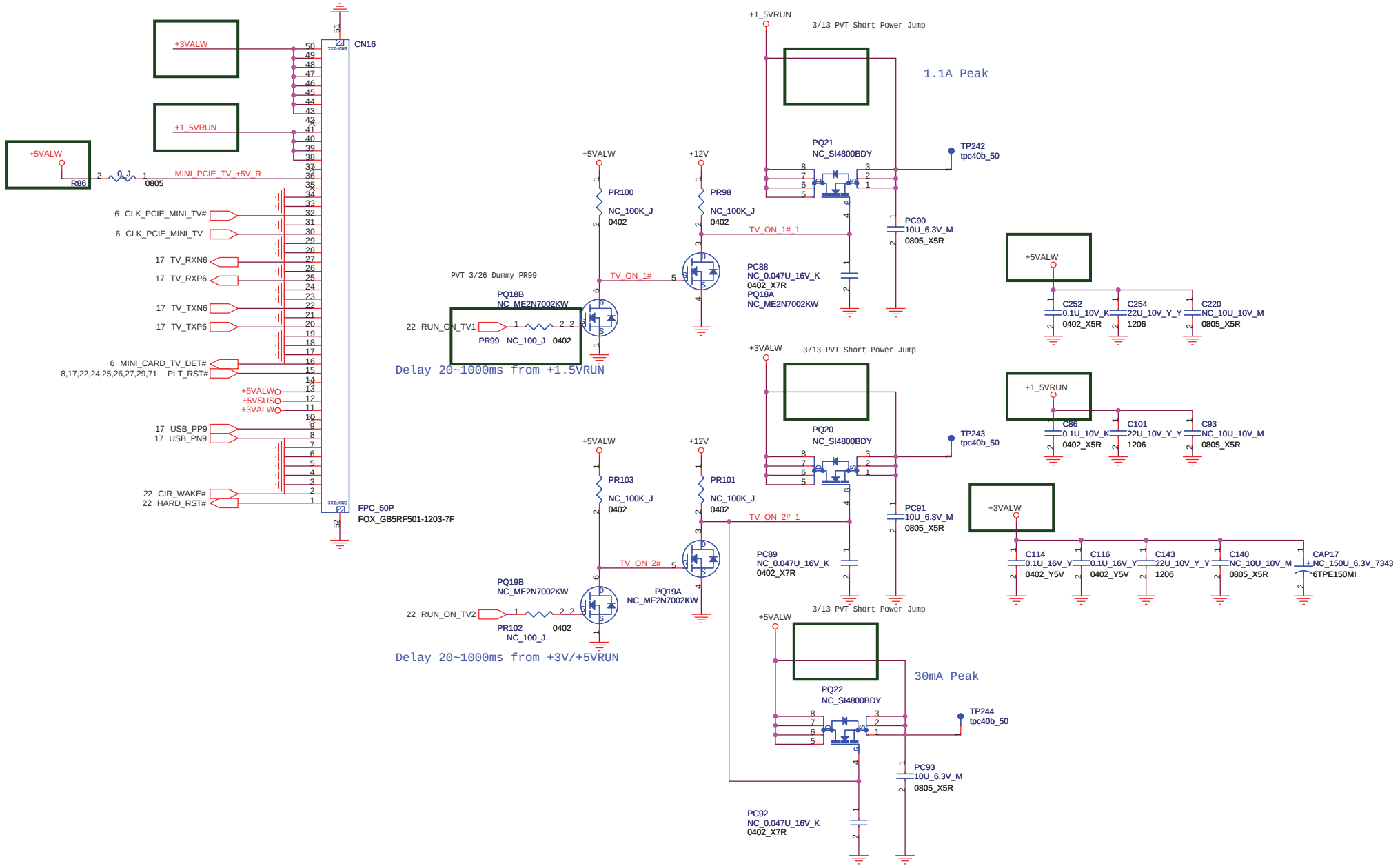

FOXCONN HON HAI Precision Ind. Co., Ltd.
CCPBG - R&D Division

Title	TV Transfer Connector	
Size A3	Document Number M760	Rev 1.0
Date: Thursday, March 27, 2008	Sheet 28 of 89	

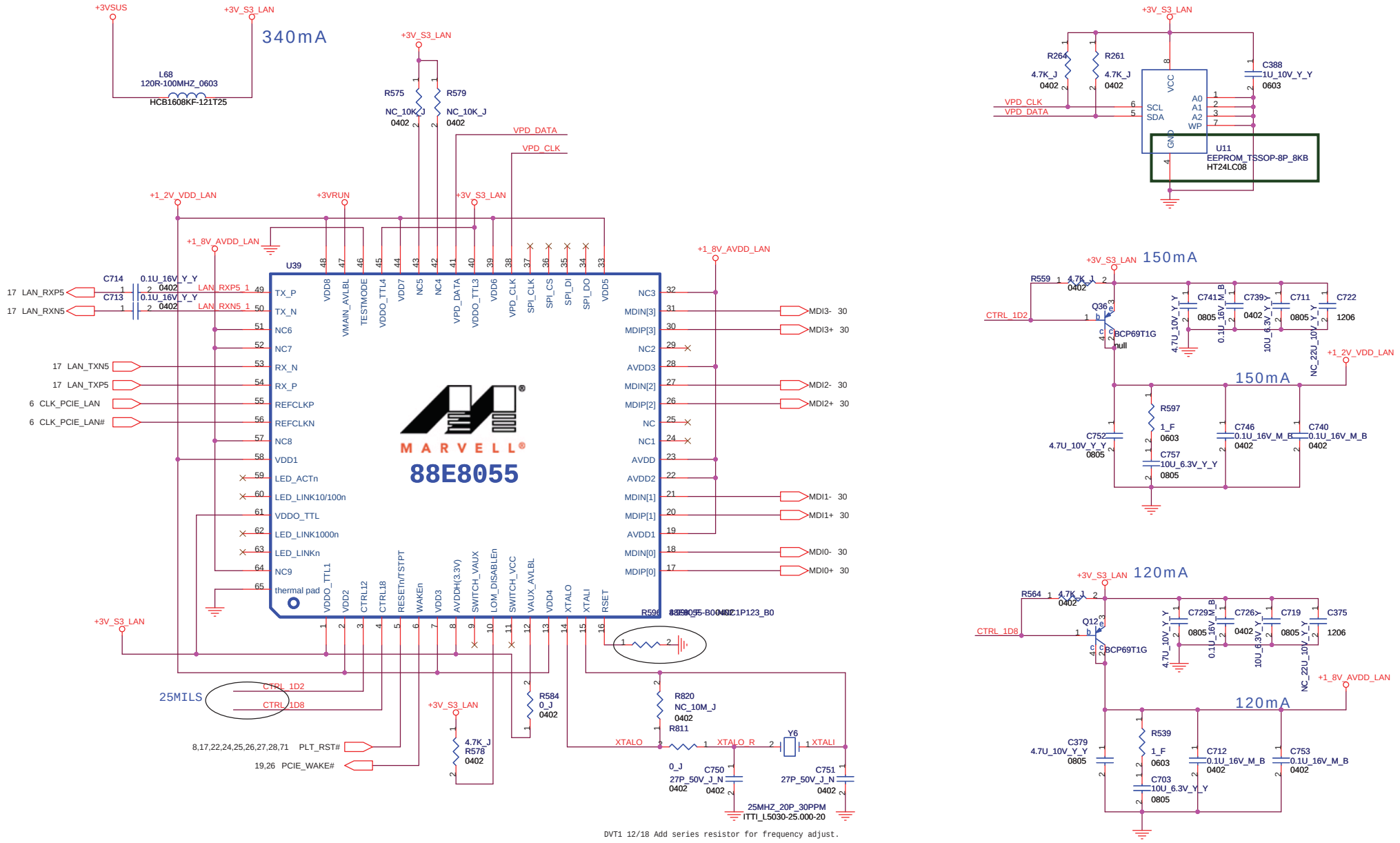

FOXCONN	HON HAI PRECISION IND. CO., LTD. CPBG - R&D Division
Title	LAN (88E8055)(1/2)
Size	A3
Document Number	M760
Rev	1.0
Date:	Thursday, March 27, 2008
Sheet	29 of 89

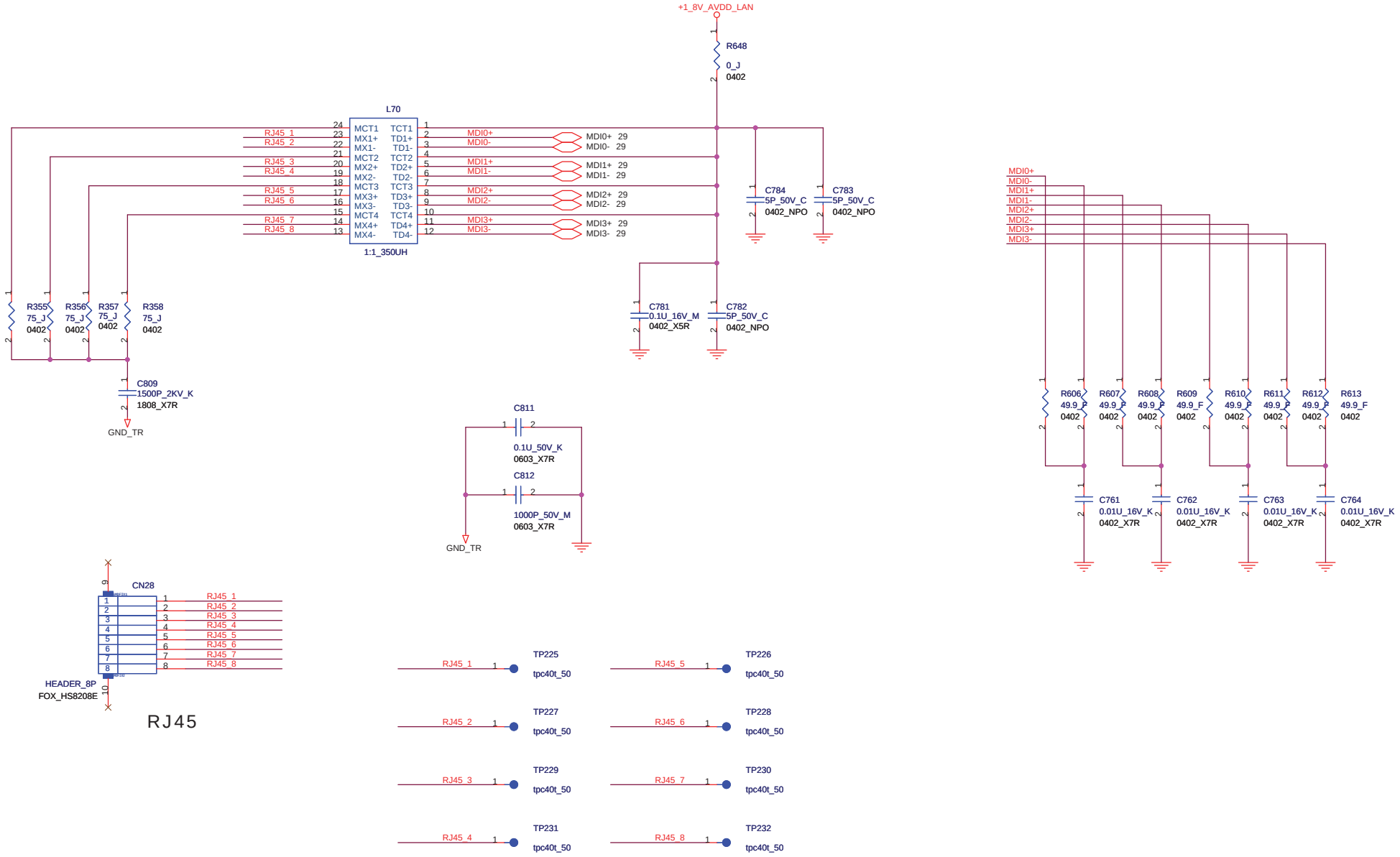

FOXCONN
HON HAI Precision Ind. Co., Ltd.
CCPBG - R&D Division

Title	LAN (Transfomer)(2/2)	
Size A3	Document Number M760	Rev 1.0
Date: Thursday, March 27, 2008	Sheet 30 of 89	

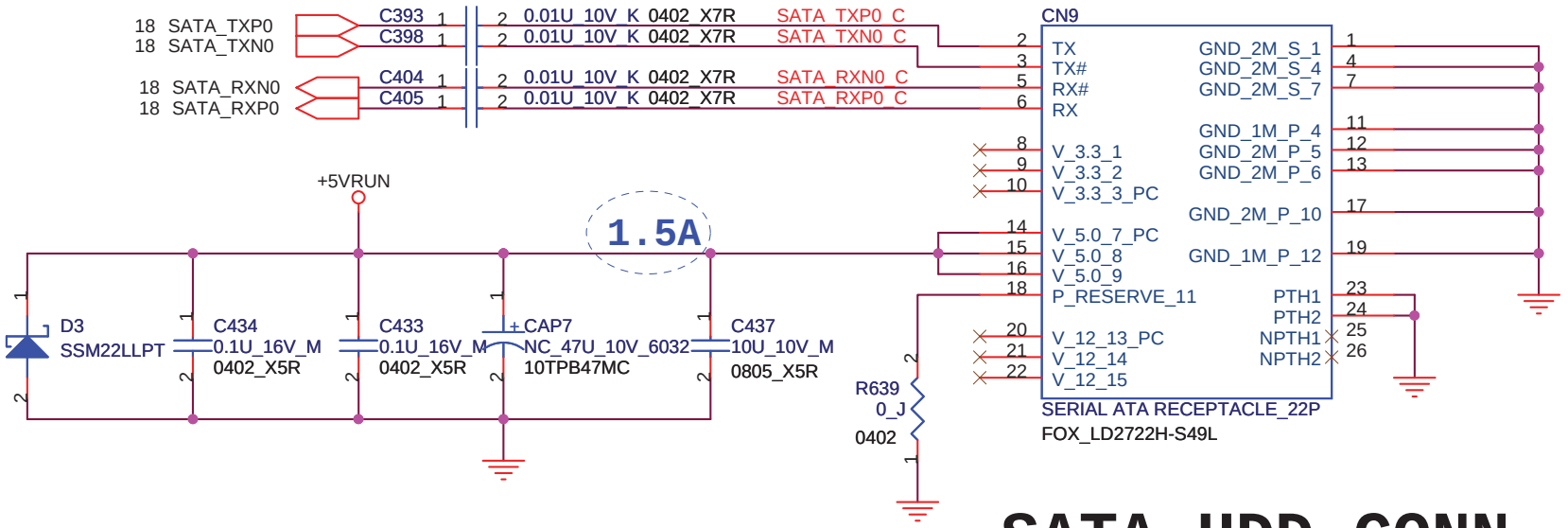

SATA HDD CONN

FOXCONN	HON HAI Precision Ind. Co., Ltd. CCPBG - R&D Division	
Title: SATA HDD		
Size: A	Document Number: M760	Rev: 1.0
Date: Thursday, March 27, 2008	Sheet 31 of 89	

4/17 (MS90)
Follow Adoi san suggest ODD: Master/HDD:Slave

H: Slave
L: Master

ODD must Master

+3VRUN

PVT 3/21 For EMI Solution pleace to near CN33

EC1 0.1U_16V_M 0402_X5R
EC2 0.01U_16V_K 0402_X7R

+5VRUN

R734 NC_4.7K_J 0402
R735 NC_8.2K_J 0402
R738 NC_4.7K_J 0402
R737 NC_8.2K_J 0402

2A

C851 10U_10V_M 0805_X5R
C853 1000P_50V_M_B 0402
C852 0.1U_16V_Y_Y 0402

+5VRUN_ODD

CN33
PTH_2
B TO B_50P
FOX_QT8H0506-44T5R-9F

44 ODD_LED#
43 P_CS0#
43 P_DA0
43 P_DA1
43 P_INTRQ
43 P_IORDY
43 P_DIOW#

ODD_LED#
P_CS0#
P_DA0
P_DA1
P_INTRQ
P_IORDY
P_DIOW#

P_CS1# 43
P_DA2 43
P_DMACK# 43
P_DIOR# 43
P_DMARQ 43

TP223 26MIL
TP224 26MIL

P_DD0
P_DD1
P_DD2
P_DD3
P_DD4
P_DD5
P_DD6
P_DD7

43 ATA_RESET#
ATA_RESET#
VR8
NC_MLVS0603M04_VR
0402 1K_J R740

43 P_DD[0..15]
P_DD[0..15]

ODD_DP#_R 19

03/27 PVT Reserve pull low signal for odd detetion.

+5VRUN_ODD
2A
D8 NC_SSM22LLPT
C176 0.1U_16V_M 0402_X5R
C177 0.1U_16V_M 0402_X5R
+CAP11 NC_47U_10V_6032 10TPB47MC
C198 10U_10V_M 0805_X5R

For ESD.

PATA ODD CONN

ODD_DP# R
19 GPIO37
Q60 2N7002EPT
R838 NC_0_J 0201

PVT 3/27 For ODD_DP# function improvement

+5VALW +5VRUN +5VRUN_ODD
PJ20 OPEN_JUMP_OPEN2
PJ21 OPEN_JUMP_OPEN2
Q46 SI3424BDV-T1-E3
2A
TP185 tpc40t_50
C815 4.7U_10V_K 0805_X5R

PVT 3/25 Change to 17-S13424B-DV00 for PUR suggestion

+12V_1
R678 100K_J 0402
+5VALW
R679 100K_J 0402
ODD_ON# 5
Q47A ME2N7002KW
ODD_ON_1
C816 0.01U_25V_M 0402_X7R

22 ODD_PWR_ON
R680 0_J 0201
ODD_ON_R
Q47B ME2N7002KW
DEFAULT LOW IN S5/S4/S3
R681 10K_J 0201
C817 NC_220P_16V_J 0402_NPO

+5VRUN_ODD
PR208 NC_330_J 0603
ODD_ON# 1
PQ49 NC_2N7002EPT

FOXCONN
HON HAI Precision Ind. Co., Ltd.
CCPBG - R&D Division

Title: PATA ODD
Size: A3
Document Number: M760
Rev: 1.0
Date: Thursday, March 27, 2008
Sheet 32 of 89

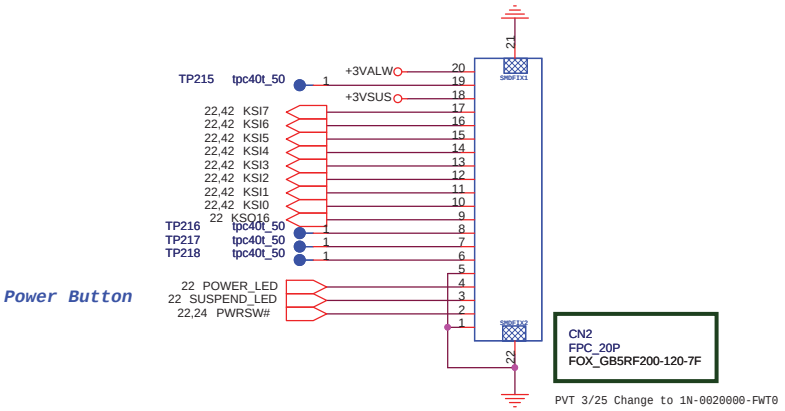

FOXCONN	HON HAI Precision Ind. Co., Ltd. CCPBG - R&D Division	
Title	**Media Key Connector**	
Size A3	Document Number M760	Rev 1.0
Date: Thursday, March 27, 2008	Sheet 33 of 89	

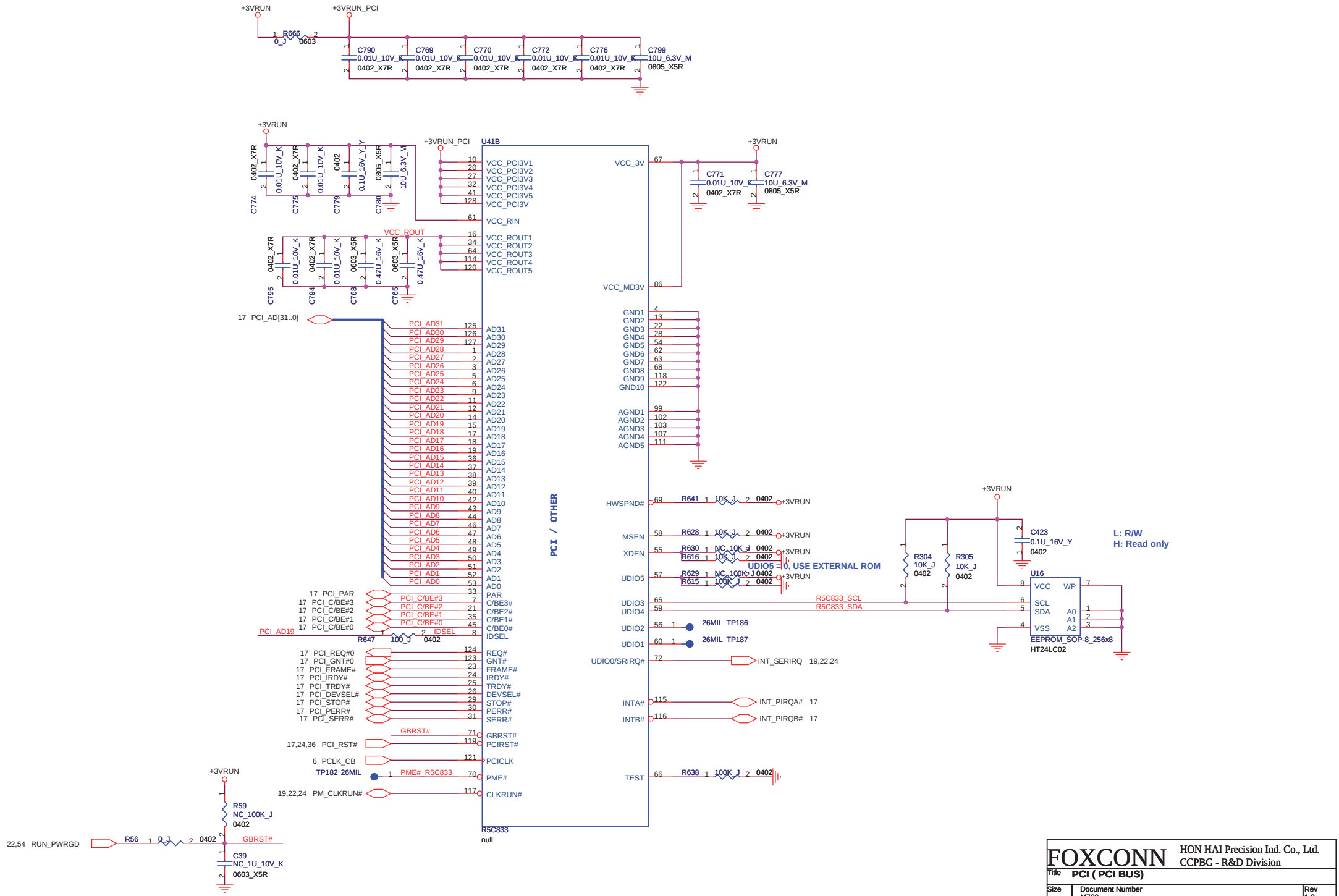

FOXCONN	HON HAI Precision Ind. Co., Ltd. CCPBG - R&D Division	
Title	PCI (PCI BUS)	
Size A3	Document Number M760	Rev 1.0
Date: Thursday, March 27, 2008	Sheet 34 of 89	

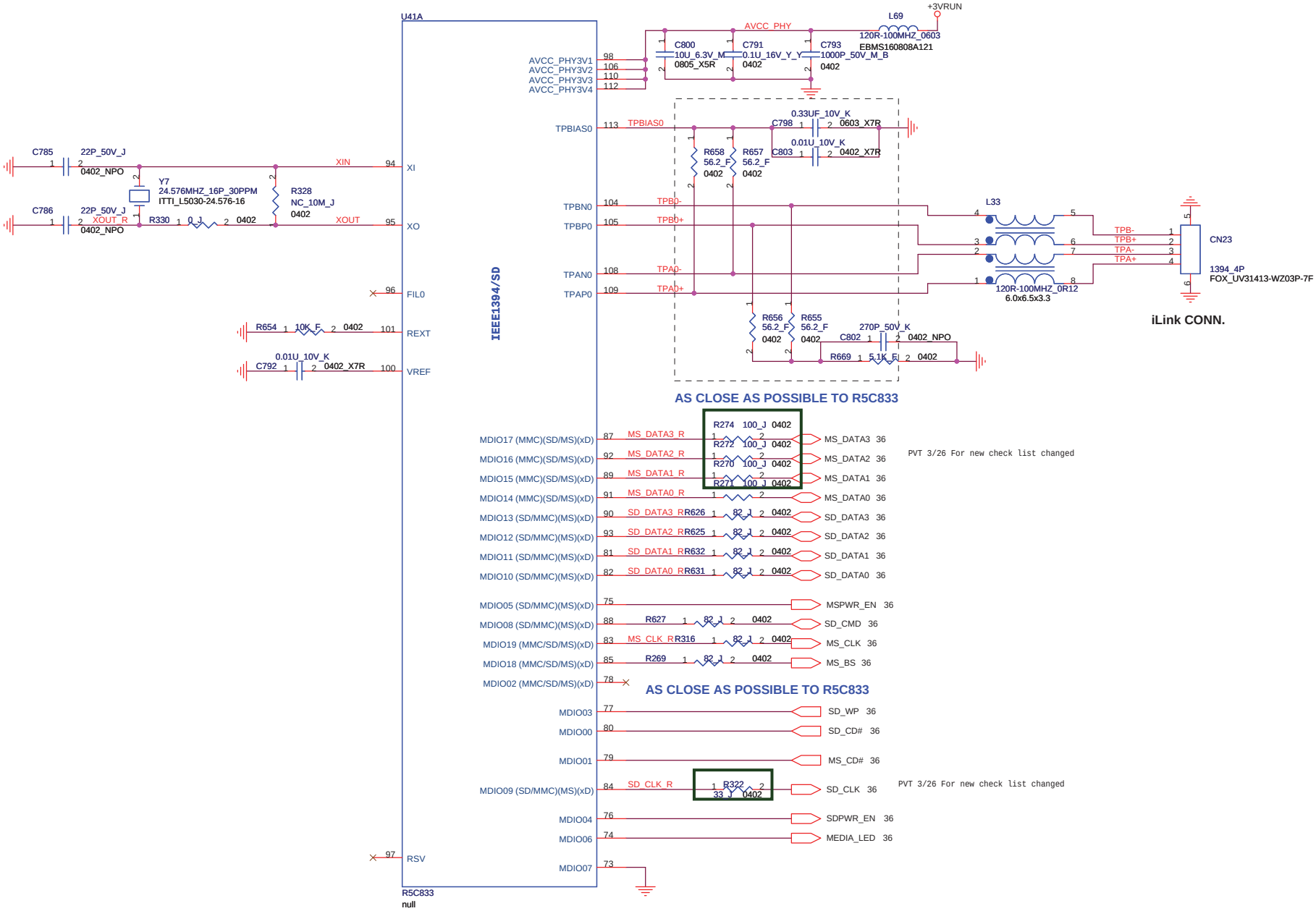

FOXCONN	HON HAI Precision Ind. Co., Ltd. CCPBG - R&D Division	
Title	PCI (ILINK)	
Size A3	Document Number M760	Rev 1.0
Date: Thursday, March 27, 2008	Sheet 35 of 89	

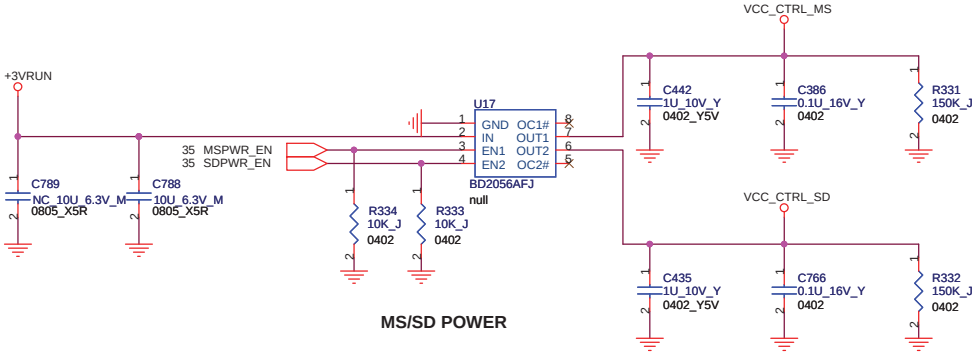

MS/SD POWER

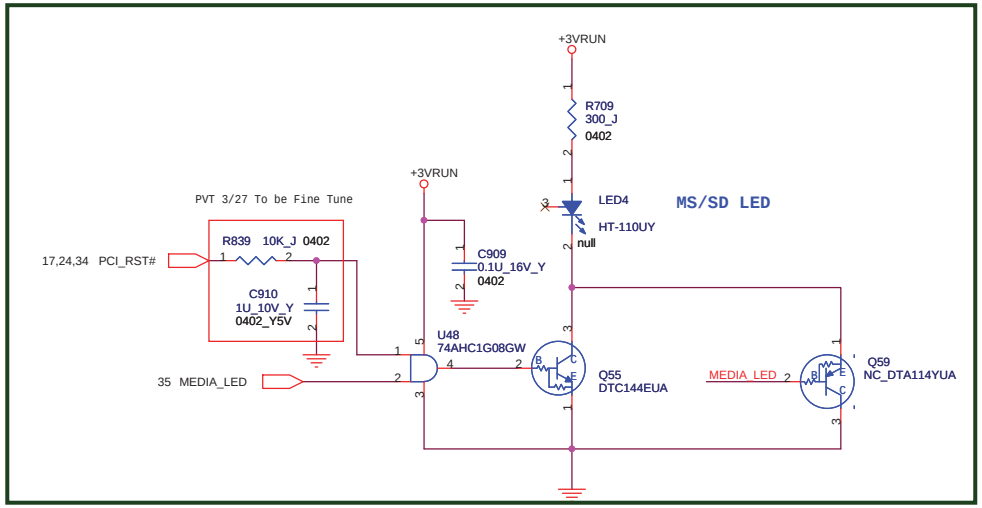

PVT 3/27 Reserve the MEDIA_LED control Active Low Schematic

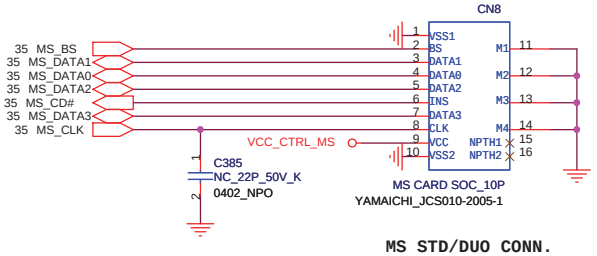

MS STD/DUO CONN.

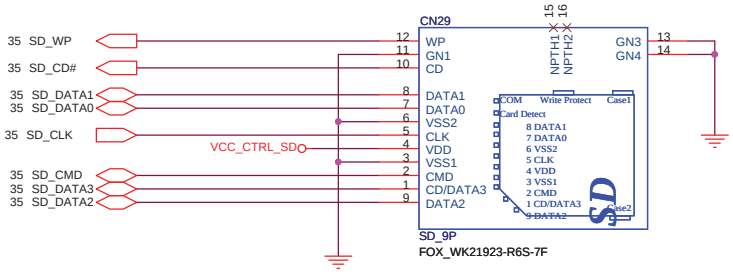

SD CONN.

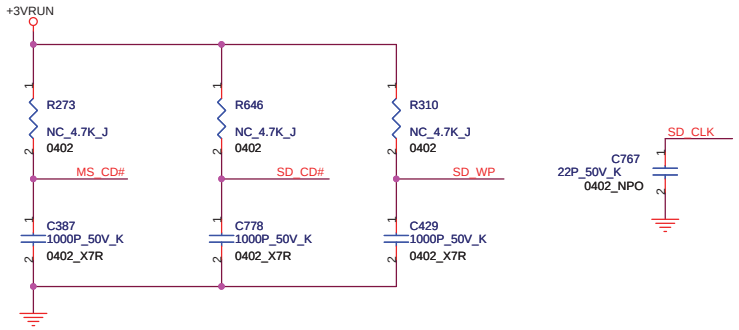

For EMI

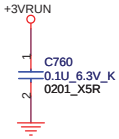

FOXCONN
HON HAI Precision Ind. Co., Ltd.
CCPBG - R&D Division

Title	PCI (MS&SD)	
Size A3	Document Number M760	Rev 1.0
Date: Thursday, March 27, 2008	Sheet 36 of 89	

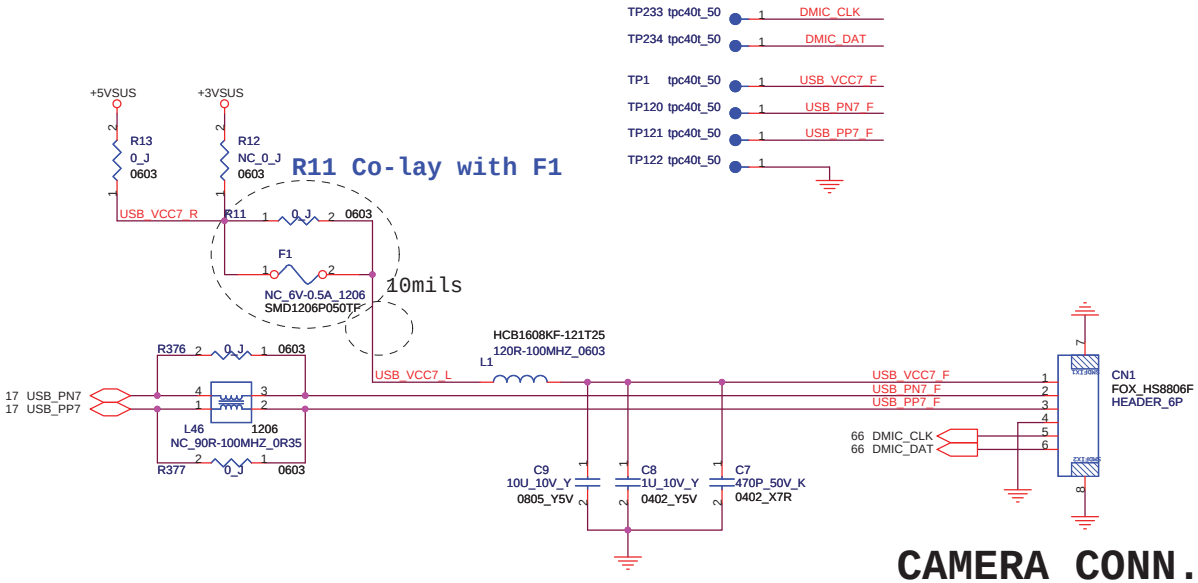

CAMERA CONN.

FOXCONN	HON HAI Precision Ind. Co., Ltd. CCPBG - R&D Division	
Title	Camera Connector	
Size A3	Document Number M760	Rev 1.0
Date: Thursday, March 27, 2008	Sheet 37 of 89	

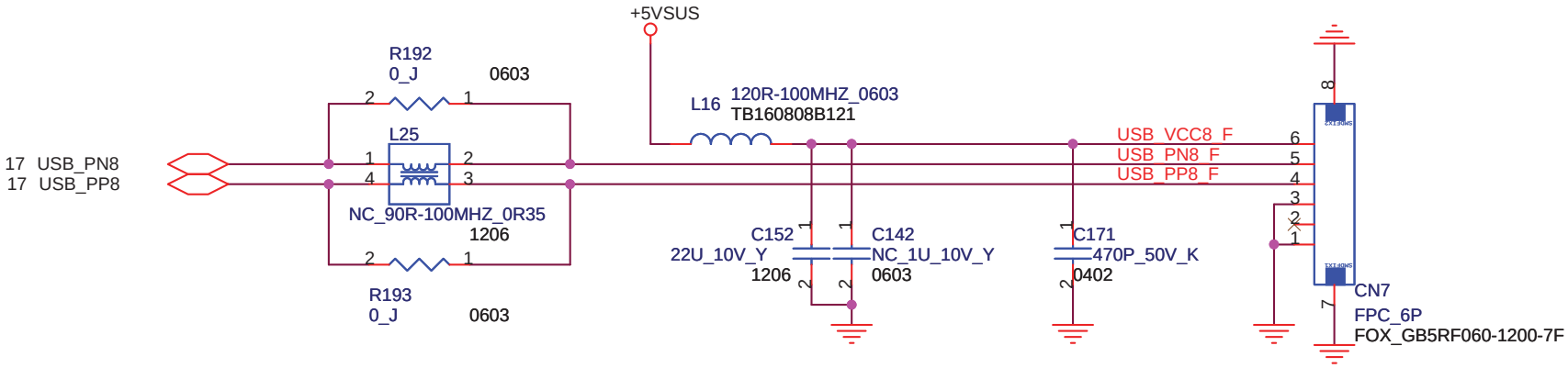

Felica Connector

FOXCONN	HON HAI Precision Ind. Co., Ltd. CCPBG - R&D Division	
Title	FELICA	
Size A	Document Number M760	Rev 1.0
Date: Thursday, March 27, 2008	Sheet 38 of 89	

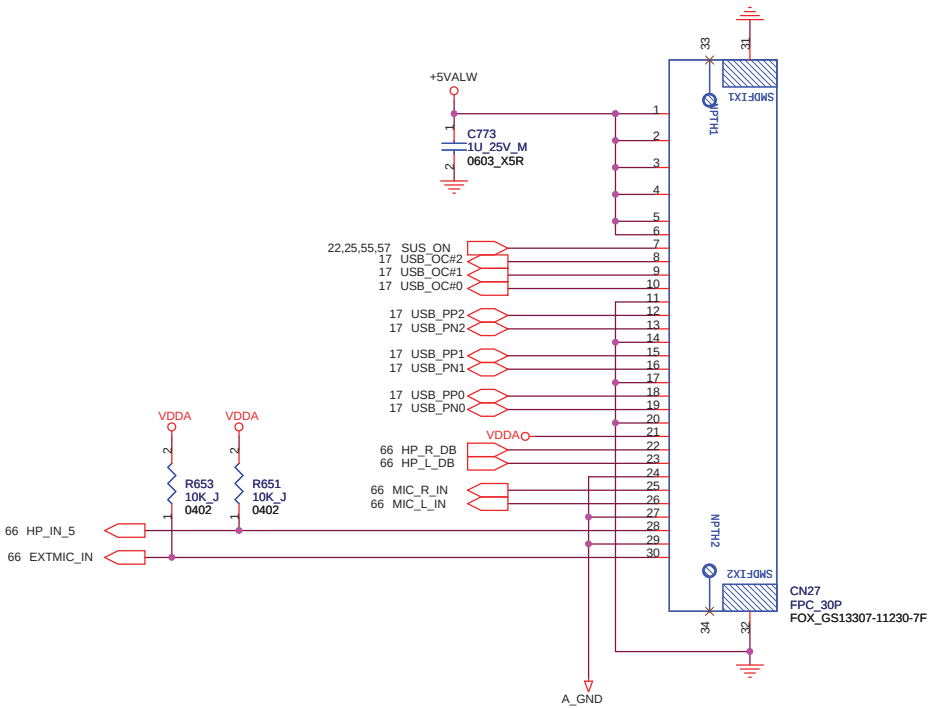

FOXCONN	HON HAI Precision Ind. Co., Ltd. CCPBG - R&D Division	
Title	**Audio+USB Connector**	
Size A3	Document Number M760	Rev 1.0
Date: Thursday, March 27, 2008	Sheet 39 of 89	

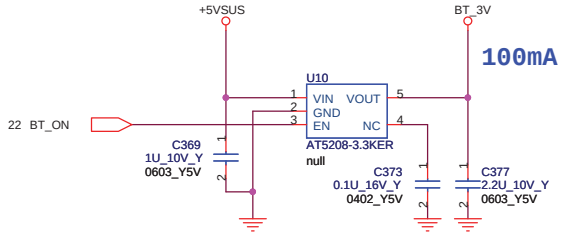

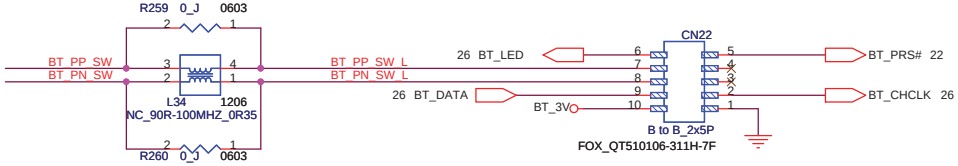

Bluetooth CONN.

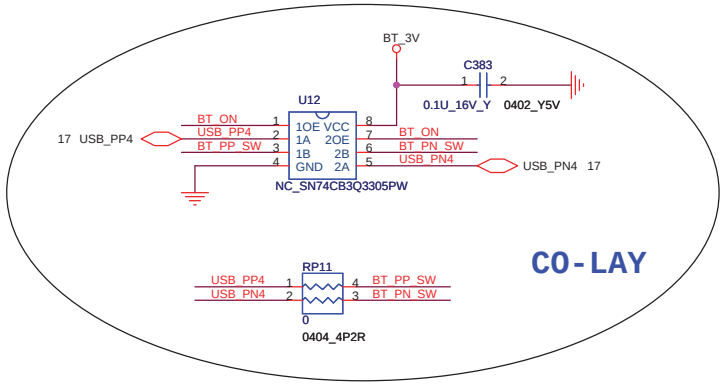

FOXCONN	HON HAI Precision Ind. Co., Ltd. CCPBG - R&D Division	
Title	Bluetooth	
Size A3	Document Number M760	Rev 1.0
Date: Thursday, March 27, 2008	Sheet 40 of 89	

MDC CONN.

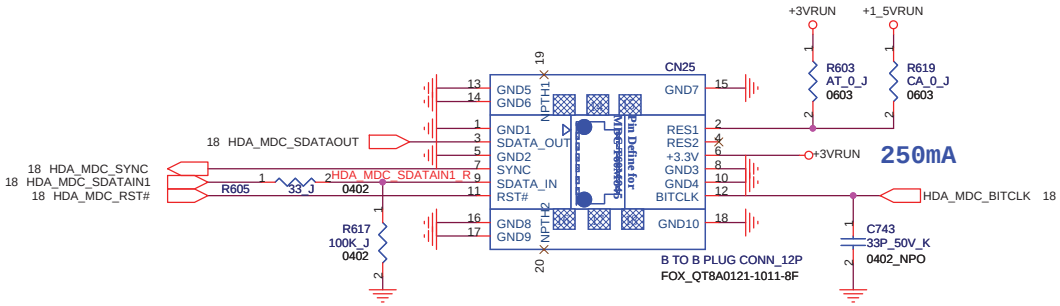

MS90 modem module only (1.5V)

FOXCONN	HON HAI Precision Ind. Co., Ltd. CCPBG - R&D Division	
Title	MDC	
Size A3	Document Number M760	Rev 1.0
Date: Thursday, March 27, 2008	Sheet 41 of 89	

KSI0 1 TP280 tpc40t_50

KSO10 1 TP281 tpc40t_50

KSI7 1 TP282 tpc40t_50

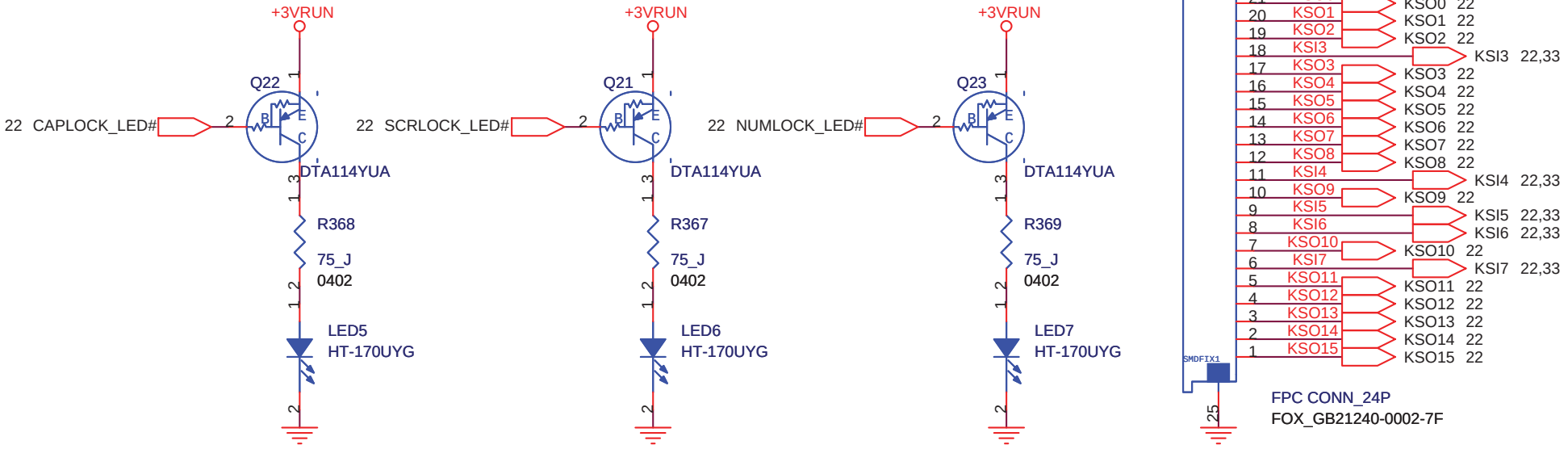

KBC CNN

FOXCONN HON HAI Precision Ind. Co., Ltd.
CCPBG - R&D Division

Title	**KB Connector**	
Size A	Document Number M760	Rev 1.0
Date: Thursday, March 27, 2008	Sheet 42 of 89	

USB2.0-->PATA BRIDGE

Max=85mA

+3VSUS

R741 0_J 0603

+3VSUS_ODD

C854 0.1U_6.3V_K 0201_X5R
C855 0.1U_6.3V_K 0201_X5R
C856 0.1U_6.3V_K 0201_X5R
C857 0.1U_6.3V_K 0201_X5R
C858 0.1U_6.3V_K 0201_X5R
C859 0.1U_6.3V_K 0201_X5R
C630 0.1U_6.3V_K 0201_X5R

Place the bypass capacitors as close to the chip VCC pin

20070829(ODD_RESET#):
1.Change from 0.22uF to 0.1uF net-work with a 10ms time constant;
2. Add a diode to avoid potential voltage feedback.

C860 2.2U_10V_Y 0603_Y5V
C861 0.1U_6.3V_K 0201_X5R

place the two cap close to AVCC Pin

0402_NPO 18P_50V_J C863

Y8 24MHZ_12P_30PPM TXC_7M24000021

ODD_XO_R
0402_NPO 18P_50V_J C862
R809 0_J 0402
NC_10M_J R821 0402
ODD_XO

07'09/10:
Change Crystal & add Cap

must place crystal as close to Pin as possible

22 USB_ODDRST# R768 0_J 0201

NC_CH520S-30PT PD28

+3VSUS R742 100K_J 0402

C864 NC_0.1U_10V_K 0402_X5R

R746 0402 NC_10K_J

07'09/03:
Reserve discharge R

17 USB_PN5
17 USB_PP5

R751 ATAPUEN 6.2K_F 0402

22 ATA_EN

+3VSUS R754 NC_1K_J 0402

R774 1K_J 0402

07'0924:
For part not approve,Change

PVT 3/25 Add TP for ARESET#_R

TP283 tpc40b_50 ARESET#_R

+3VSUS R759 10K_J 0201

U44 EEPROM_SOP-8_256x8 HT24LC02
A2 A1 A0 VSS SDA SCL WP VCC

ARESET# R776 0_J 0201 ARESET# R

R777 NC_10K_J 0201

C865 0.1U_6.3V_K 0201_X5R

+3VSUS

R758 5.6K_J 0402

R760 1.5K_J 0402
R761 1.5K_J 0402

ODD_SCL
ODD_SDA

U43 CY7C68300C-56LFXC

VCC1 VCC2 VCC3 VCC4 VCC5 VCC6 VCC7 XTALIN XTALOUT
AVCC
RESET#
DMINUS
DPLUS
PWR500#/PU10K
ATAPUEN/NC
VBUS_ATA_ENABLE/ATA_EN
DIOW#
DIOR#
DMACK#
IORDY
DMARQ
SCL
SDA
AGND GND1 GND2 GND3 GND4 GND5 GND6 GND7 GND8
INTRQ
DA0
DA1
DRVPWRVLD/DA2
CS0#
CS1#
DA2/VBUS_PWR_VALID
ARESET#
THERMAL PAD
DD0 DD1 DD2 DD3 DD4 DD5 DD6 DD7 DD8 DD9 DD10 DD11 DD12 DD13 DD14 DD15

USB_R_ODDRST#
R748 8.2K_J 0402
R752 22_J 0402
R753 22_J 0402
R755 22_J 0402
R756 82_J 0402
R757 82_J 0402

ATAPUEN
R743 10K_J 0201
R744 10K_J 0201

R745 82_J 0402
RP62 33 0404_4P2R
RP63 33 0404_4P2R
R747 33_J 0402
R749 33_J 0402

P_INTRQ P_DA0 P_DA1 P_CS0# P_CS1# P_DA2 ARESET# D

+5VRUN_ODD
R837 NC_0_J 0402
R836 10K_J 0402
ARESET# D
D23 SCS500V-40-LF
ATA_RESET#

PVT 3/27 Add the power leakage solution

R750 NC_10K_J 0402 +5VRUN_ODD
R835 NC_10K_J 0402 +3VSUS

PVT 3/25 Reserve the Power Source to +3VSUS by MOR

*Layout Note:
Please place these Series R close IC Pin

32 P_DD[0..15] P_DD[0..15]

32 P_CS0# P_CS0#
32 P_DA0 P_DA0
32 P_DA1 P_DA1
32 P_INTRQ P_INTRQ
32 P_IORDY P_IORDY
32 P_DIOW# P_DIOW#
32 P_CS1# P_CS1#
32 P_DA2 P_DA2
32 P_DMARQ P_DMARQ
32 P_DIOR# P_DIOR#
32 P_DMACK# P_DMACK#
32 ATA_RESET# ATA_RESET#

0404_4P2R
RP64 DD1 DD2 P_DD1 P_DD2
RP65 DD0 DD3 P_DD0 P_DD3
RP66 DD4 DD5 P_DD4 P_DD5
RP67 DD6 DD7 P_DD6 P_DD7
RP68 DD8 DD9 P_DD8 P_DD9
RP69 DD10 DD11 P_DD10 P_DD11
RP70 DD12 DD13 P_DD12 P_DD13
RP71 DD14 DD15 P_DD14 P_DD15

07'0928:
Follow FAE suggestion,connect ARESET# instead of GND.
CY7C68300 Ver. A has issue: EEPROM Data will lost.

07'08/30(follow demo SCH):
1.Address : '100';
2.WP connect to ARESET#

FOXCONN HON HAI PRECISION IND. CO., LTD.
CPBG - R&D Division

Title: USB 2.0 to PATA ODD (CY7C68300C-56LFXC)

Size A3 | Document Number M760 | Rev 1.0

Date: Thursday, March 27, 2008 | Sheet 43 of 89

PVT 3/18 Change back to DVT1 solution

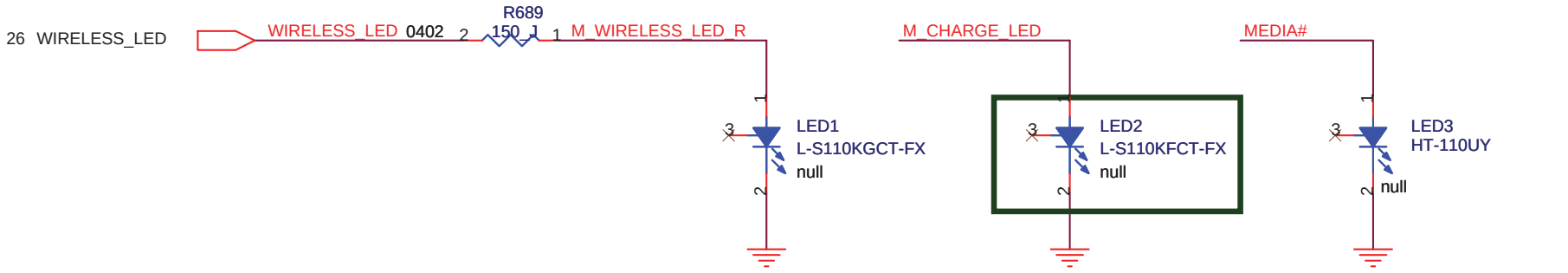

Wireless LED **Charge LED** **ODD/HDD LED**

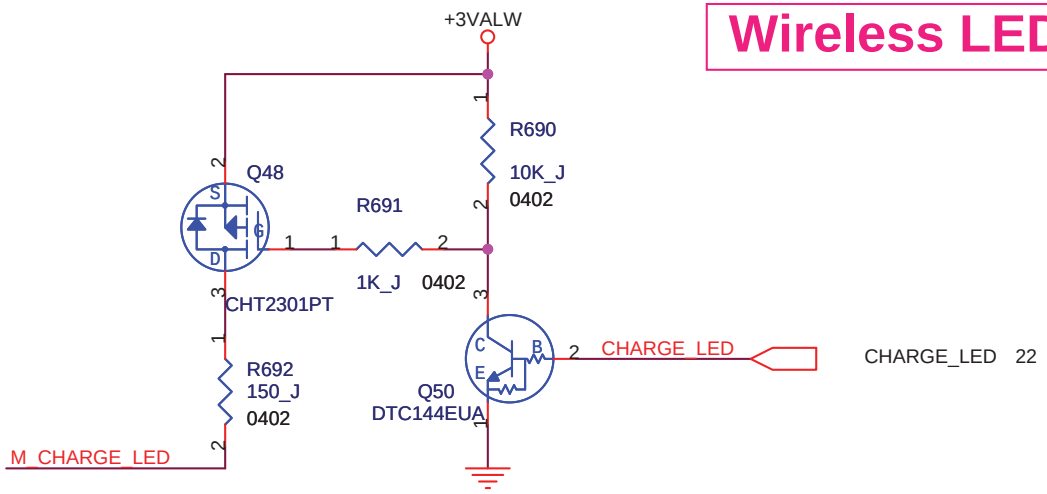

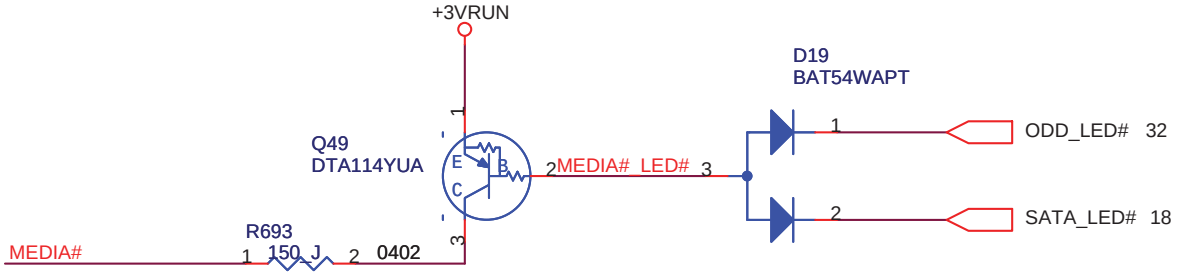

FOXCONN	HON HAI Precision Ind. Co., Ltd. CCPBG - R&D Division	
Title: **Status LED**		
Size: A	Document Number: M760	Rev: 1.0
Date: Thursday, March 27, 2008	Sheet 44 of 89	

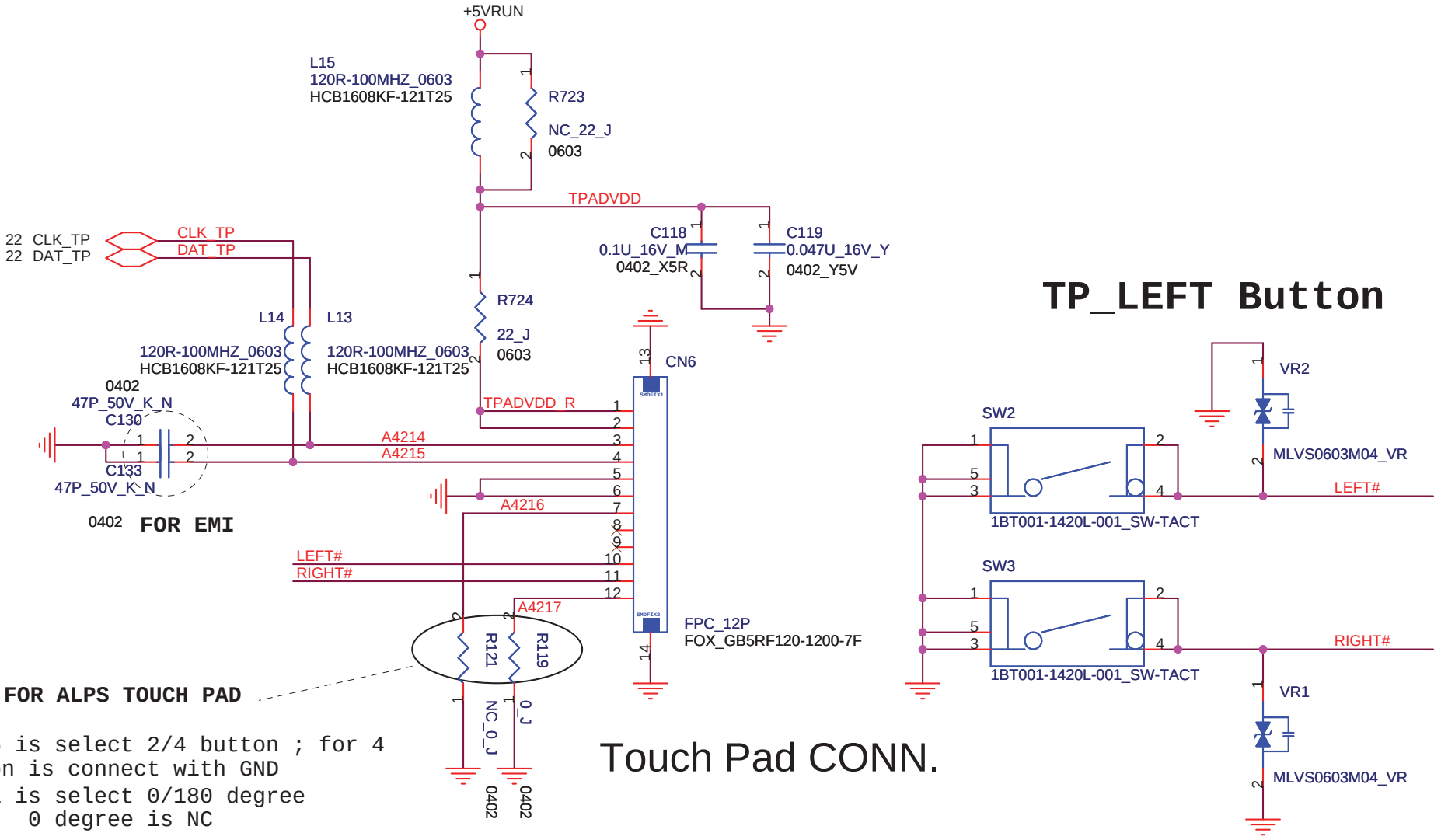

FOXCONN	HON HAI Precision Ind. Co., Ltd. CCPBG - R&D Division	
Title	Touch Pad	
Size A	Document Number M760	Rev 1.0
Date:	Thursday, March 27, 2008	Sheet 45 of 89

HW THERMAL PROTECTION

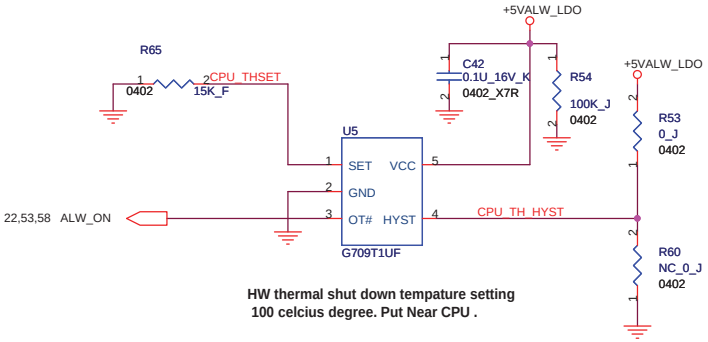

HW thermal shut down tempature setting
100 celcius degree. Put Near CPU .

FOXCONN	HON HAI Precision Ind. Co., Ltd. CCPBG - R&D Division	
Title	**HW Thermal Protection**	
Size A3	Document Number **M760**	Rev 1.0
Date: Thursday, March 27, 2008	Sheet 46 of 89	

FAN

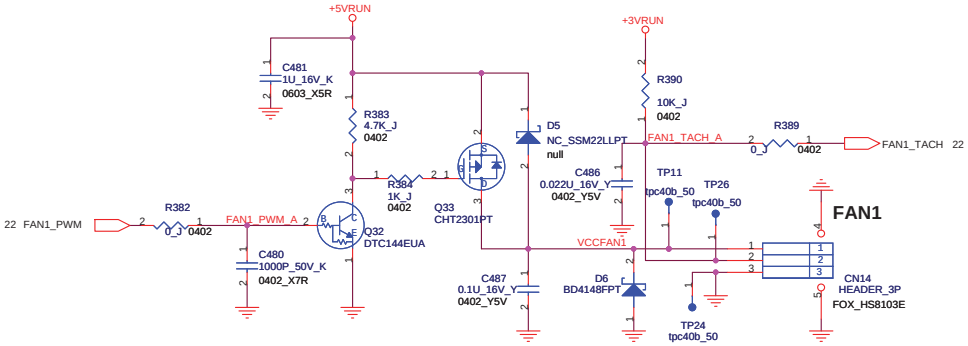

FOXCONN	HON HAI Precision Ind. Co., Ltd. CCPBG - R&D Division	
Title: FAN		
Size: Custom	Document Number: M760	Rev: 1.0
Date: Thursday, March 27, 2008	Sheet 47 of 89	

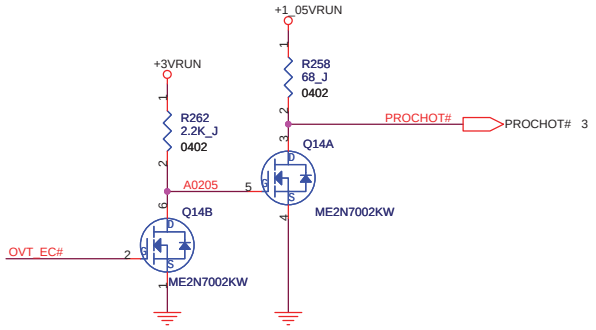

GMCH/VGA SENSOR
G781P8f

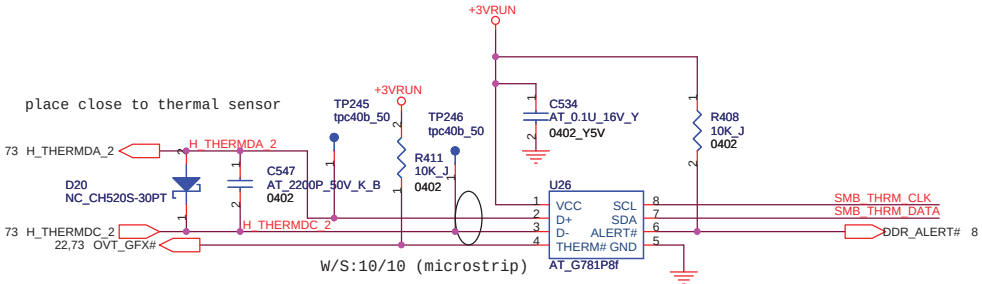

SM bus Address
1001 1000 (G781)

Place Thermal-Sensor near NB

CPU/GMCH/DDR SENSOR
EMC1402-2-ACZL

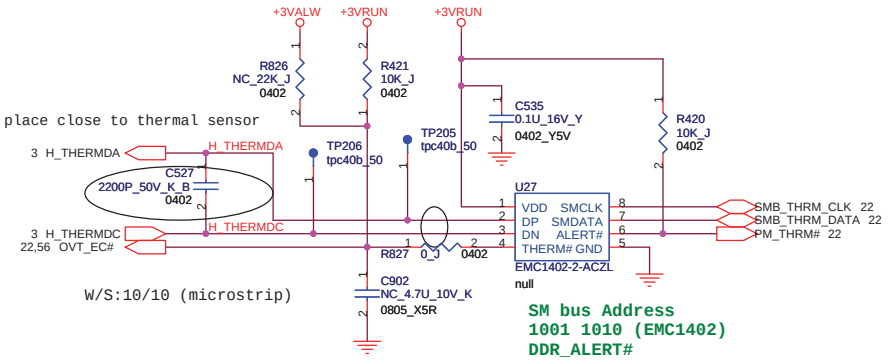

SM bus Address
1001 1010 (EMC1402)
DDR_ALERT#

Place Thermal-Sensor near DDR

FOXCONN	HON HAI Precision Ind. Co., Ltd. CCPBG - R&D Division	
Title: Thermal-Sensor		
Size: A3	Document Number: M760	Rev: 1.0
Date: Thursday, March 27, 2008	Sheet 48 of 89	

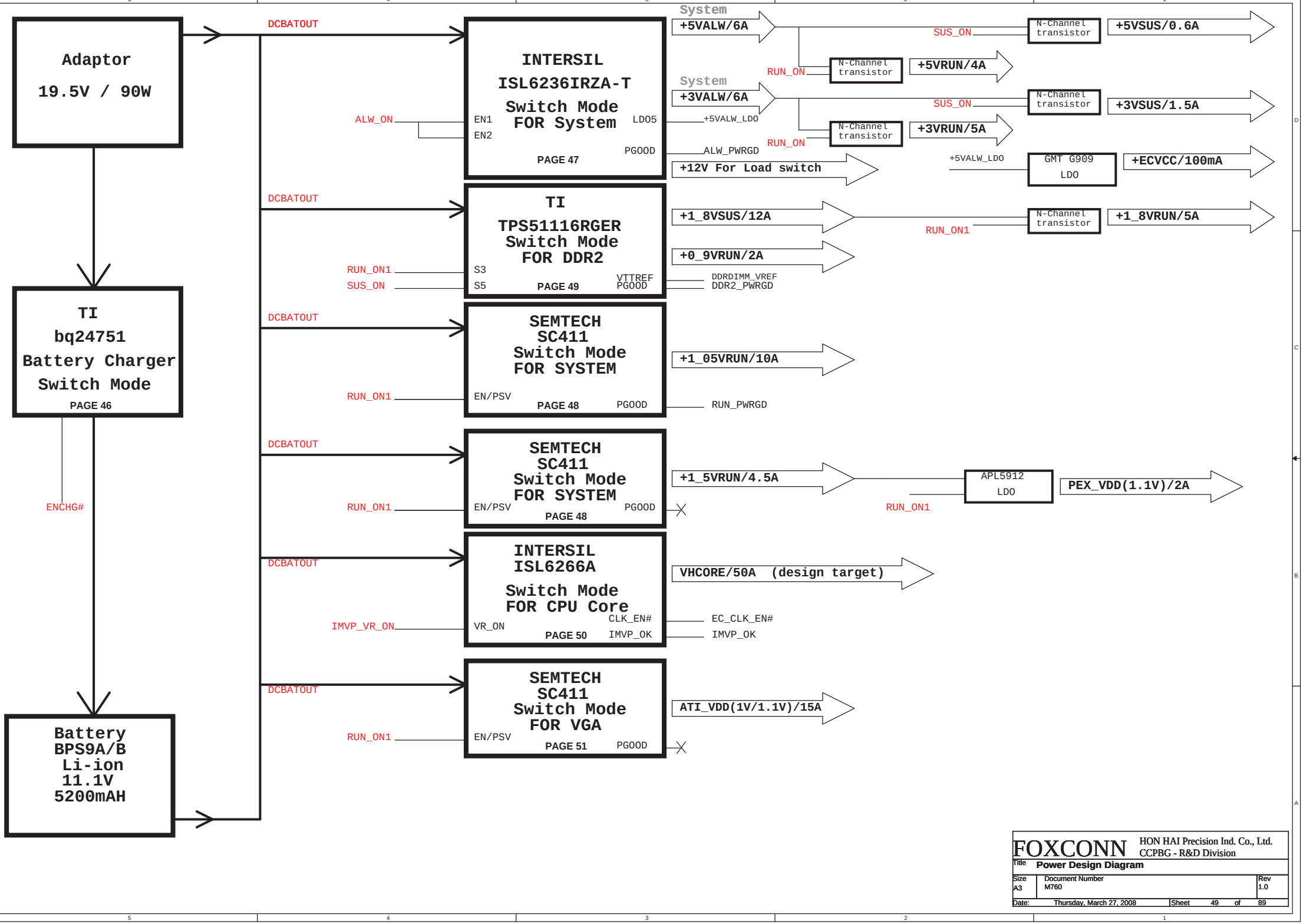

FOXCONN HON HAI Precision Ind. Co., Ltd.
CCPBG - R&D Division

Title: Power Design Diagram		
Size: A3	Document Number: M760	Rev: 1.0
Date: Thursday, March 27, 2008	Sheet 49 of 89	

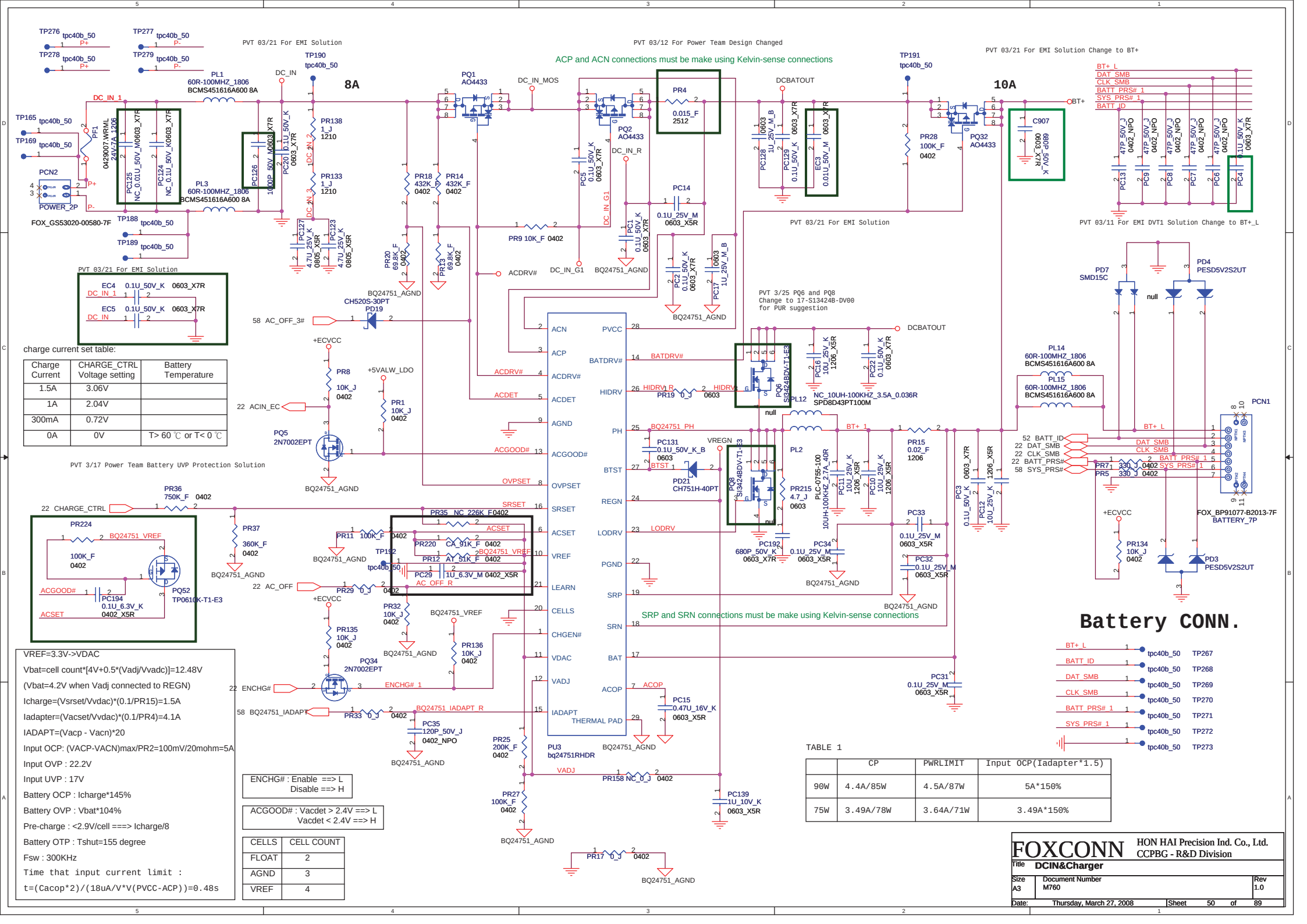
PVT 03/21 For EMI Solution
PVT 03/12 For Power Team Design Changed
ACP and ACN connections must be make using Kelvin-sense connections
PVT 03/21 For EMI Solution Change to BT+
8A
10A
PVT 03/21 For EMI Solution
PVT 03/11 For EMI DVT1 Solution Change to BT+_L
PVT 3/25 PQ6 and PQ8 Change to 17-S13424B-DV00 for PUR suggestion
PVT 03/17 Power Team Battery UVP Protection Solution
SRP and SRN connections must be make using Kelvin-sense connections
Battery CONN.
charge current set table:
Charge Current
CHARGE_CTRL Voltage setting
Battery Temperature
1.5A
3.06V
1A
2.04V
300mA
0.72V
0A
0V
T> 60 ℃ or T< 0 ℃
VREF=3.3V->VDAC
Vbat=cell count*[4V+0.5*(Vadj/Vvadc)]=12.48V
(Vbat=4.2V when Vadj connected to REGN)
Icharge=(Vsrset/Vvdac)*(0.1/PR15)=1.5A
Iadapter=(Vacset/Vvdac)*(0.1/PR4)=4.1A
IADAPT=(Vacp - Vacn)*20
Input OCP: (VACP-VACN)max/PR2=100mV/20mohm=5A
Input OVP : 22.2V
Input UVP : 17V
Battery OCP : Icharge*145%
Battery OVP : Vbat*104%
Pre-charge : <2.9V/cell ===> Icharge/8
Battery OTP : Tshut=155 degree
Fsw : 300KHz
Time that input current limit :
t=(Cacop*2)/(18uA/V*V(PVCC-ACP))=0.48s
ENCHG# : Enable ==> L
Disable ==> H
ACGOOD# : Vacdet > 2.4V ==> L
Vacdet < 2.4V ==> H
CELLS
CELL COUNT
FLOAT
2
AGND
3
VREF
4
TABLE 1
CP
PWRLIMIT
Input OCP(Iadapter*1.5)
90W
4.4A/85W
4.5A/87W
5A*150%
75W
3.49A/78W
3.64A/71W
3.49A*150%
FOXCONN
HON HAI Precision Ind. Co., Ltd.
CCPBG - R&D Division
Title
DCIN&Charger
Size
A3
Document Number
M760
Rev
1.0
Date:
Thursday, March 27, 2008
Sheet
50
of
89

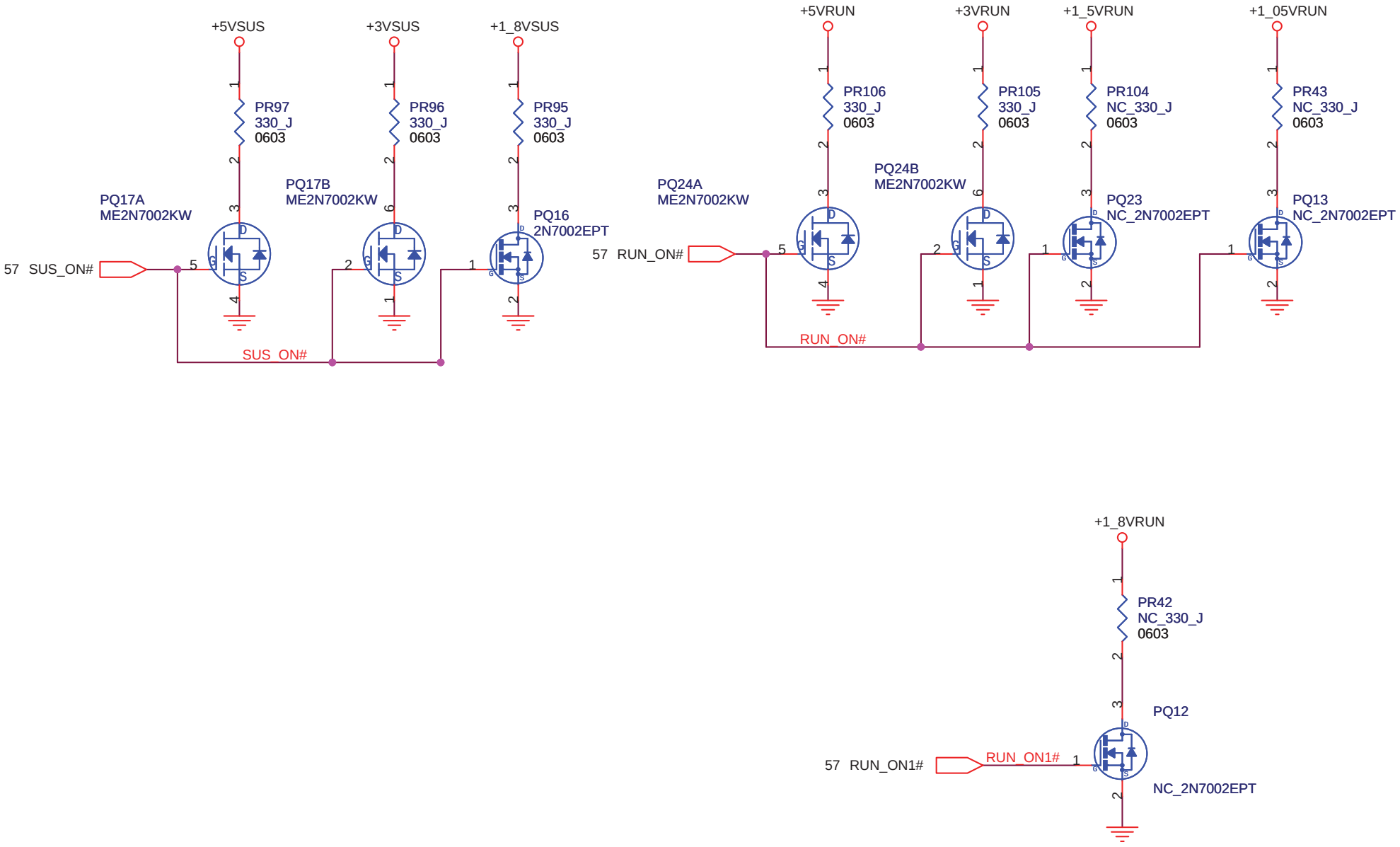

FOXCONN

HON HAI Precision Ind. Co., Ltd.
CCPBG - R&D Division

Title	**DISCHARGE CIRCUIT**	
Size: A	Document Number: M760	Rev: 1.0
Date: Thursday, March 27, 2008	Sheet 51 of 89	

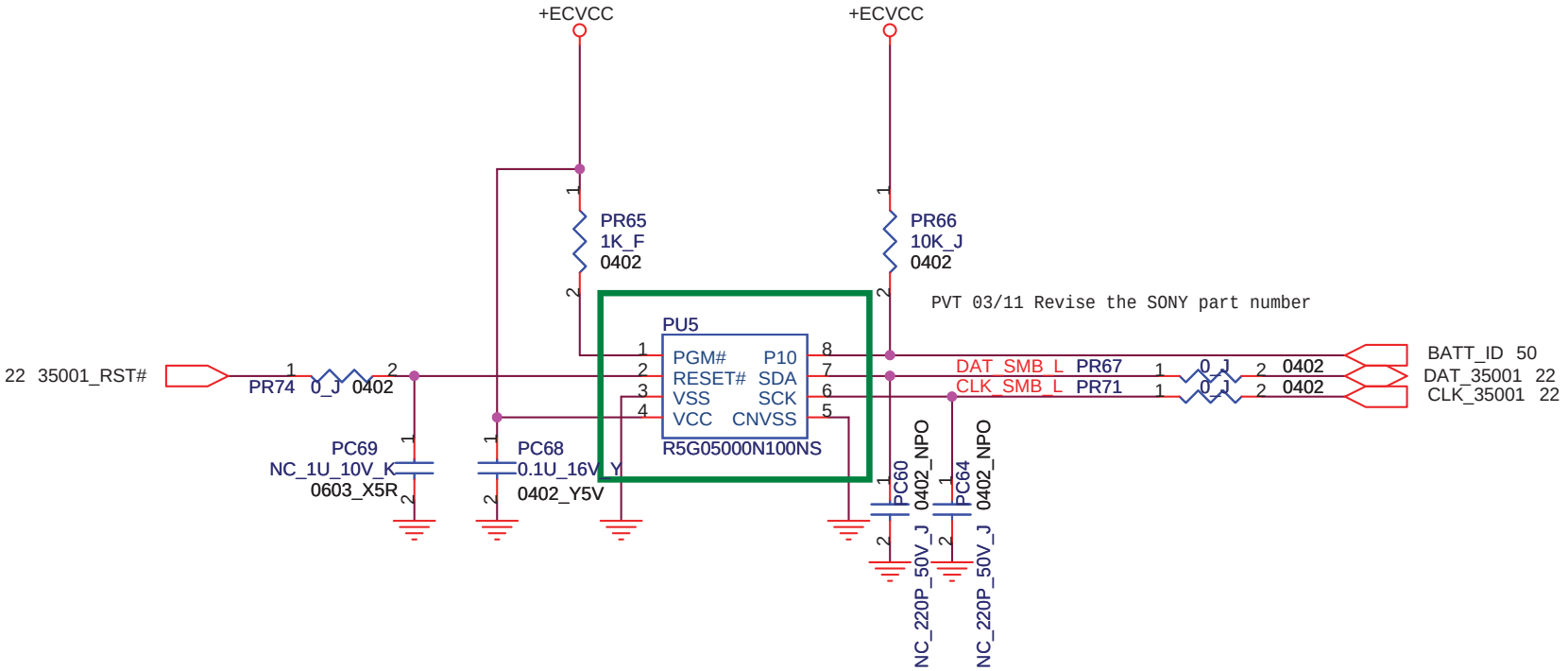

FOXCONN	HON HAI Precision Ind. Co., Ltd. CCPBG - R&D Division	
Title	**Identify IC**	
Size A	Document Number M760	Rev 1.0
Date: Thursday, March 27, 2008	Sheet 52 of 89	

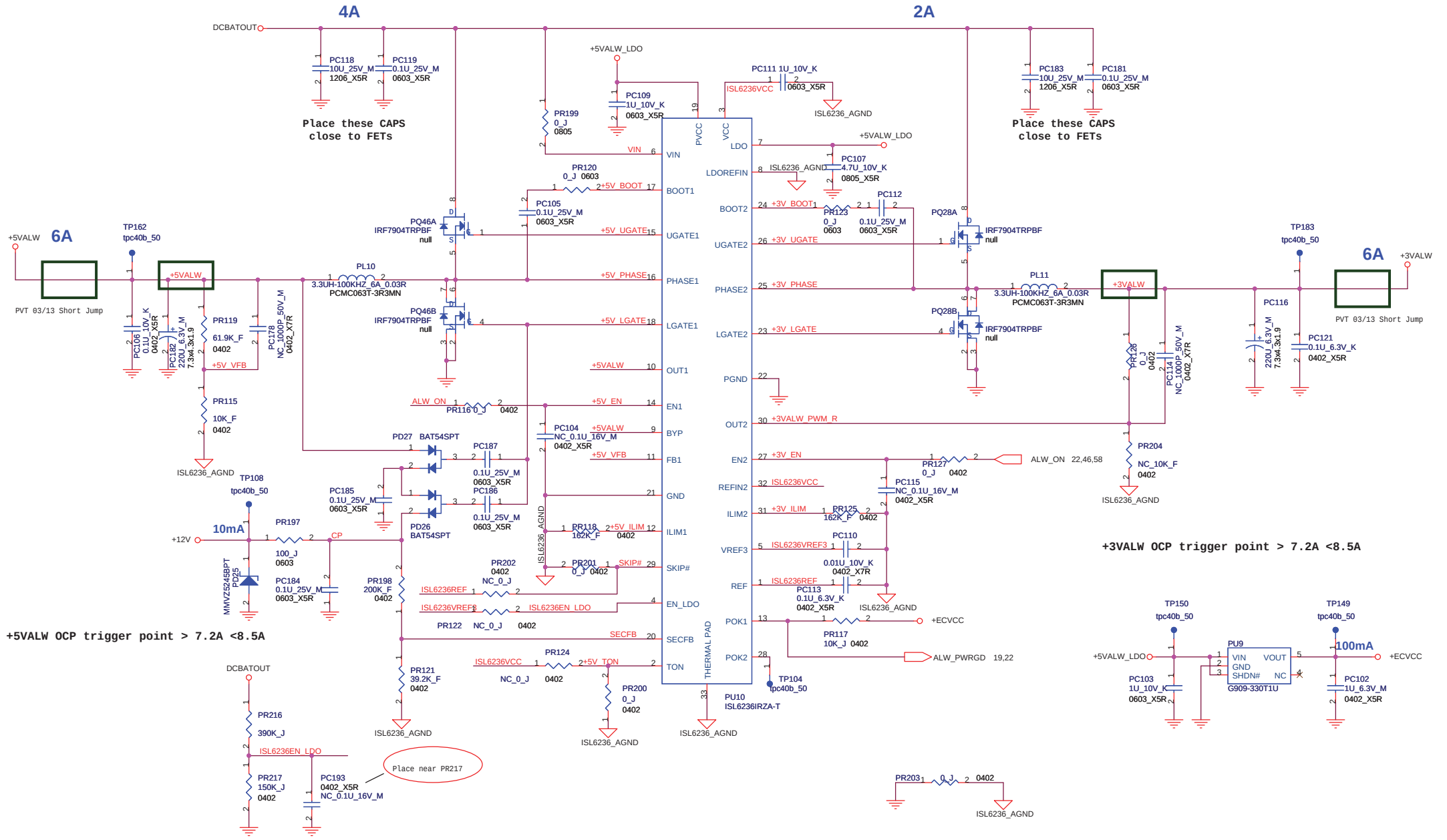

TON	Operating Frequence (+5VALW/+3VALW)
VCC	200KHz/300KHz
REF(OPEN)	400KHz/300KHz
GND	400KHz/500KHz

SKIP#	Operating Mode
GND	Pulse-Skipping
REF	Ultrasonic-Skip
VCC	PWM

L=VOUT(VIN-VOUT)/(VIN*f*LIR*ILOAD(MAX))
Rocp=(Iocp-Iripple/2)*(10*Rds(on))/5u
+5VALW=((PR233/PR235)+1)*VFB1=5.033V

FOXCONN HON HAI Precision Ind. Co., Ltd.
CCPBG - R&D Division

Title	SYS Power (+3_3V/+5V)	
Size A3	Document Number M760	Rev 1.0
Date: Thursday, March 27, 2008	Sheet 53 of 89	

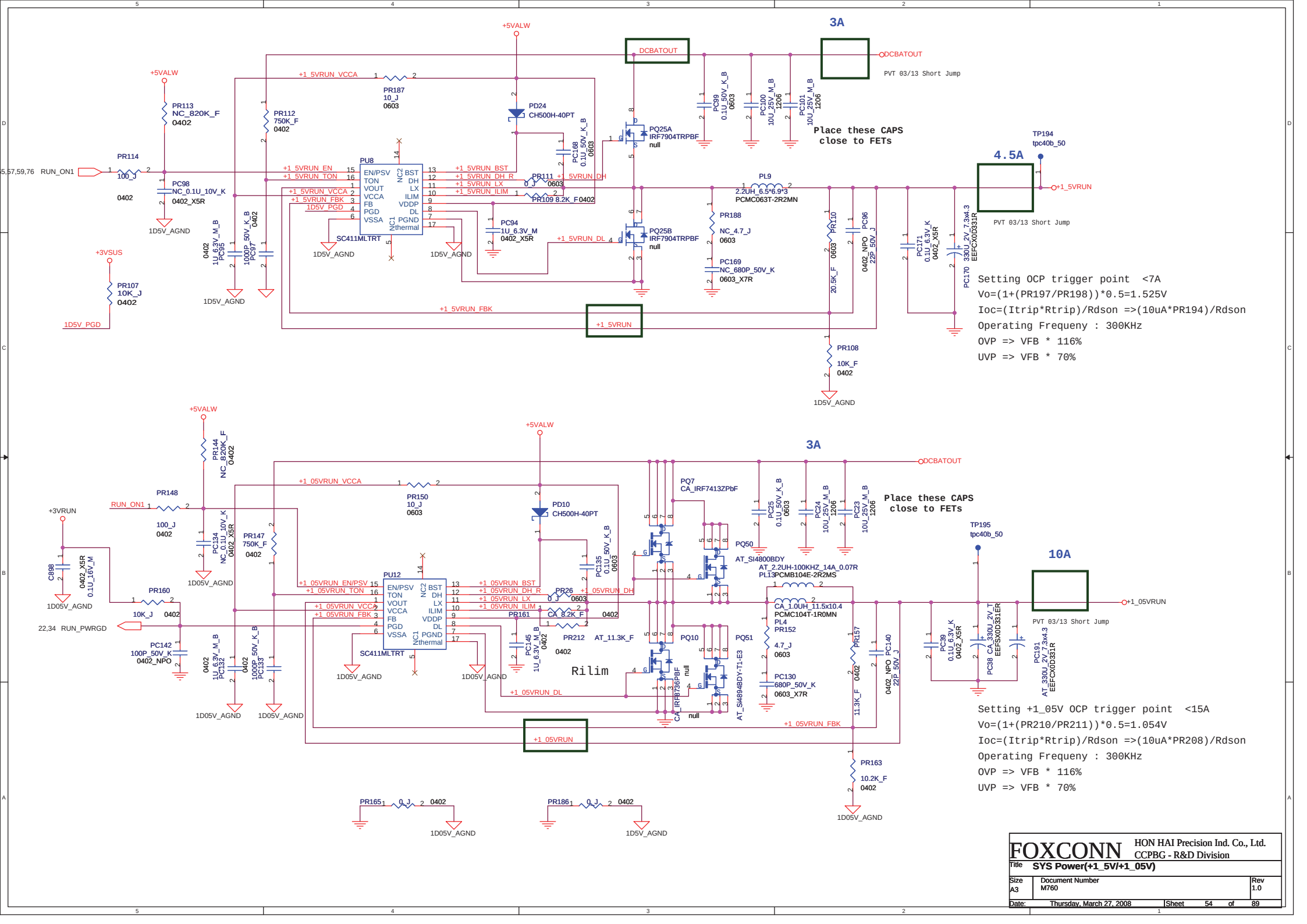

FOXCONN	HON HAI Precision Ind. Co., Ltd. CCPBG - R&D Division		
Title	SYS Power(+1_5V/+1_05V)		
Size A3	Document Number M760		Rev 1.0
Date: Thursday, March 27, 2008		Sheet 54 of 89	

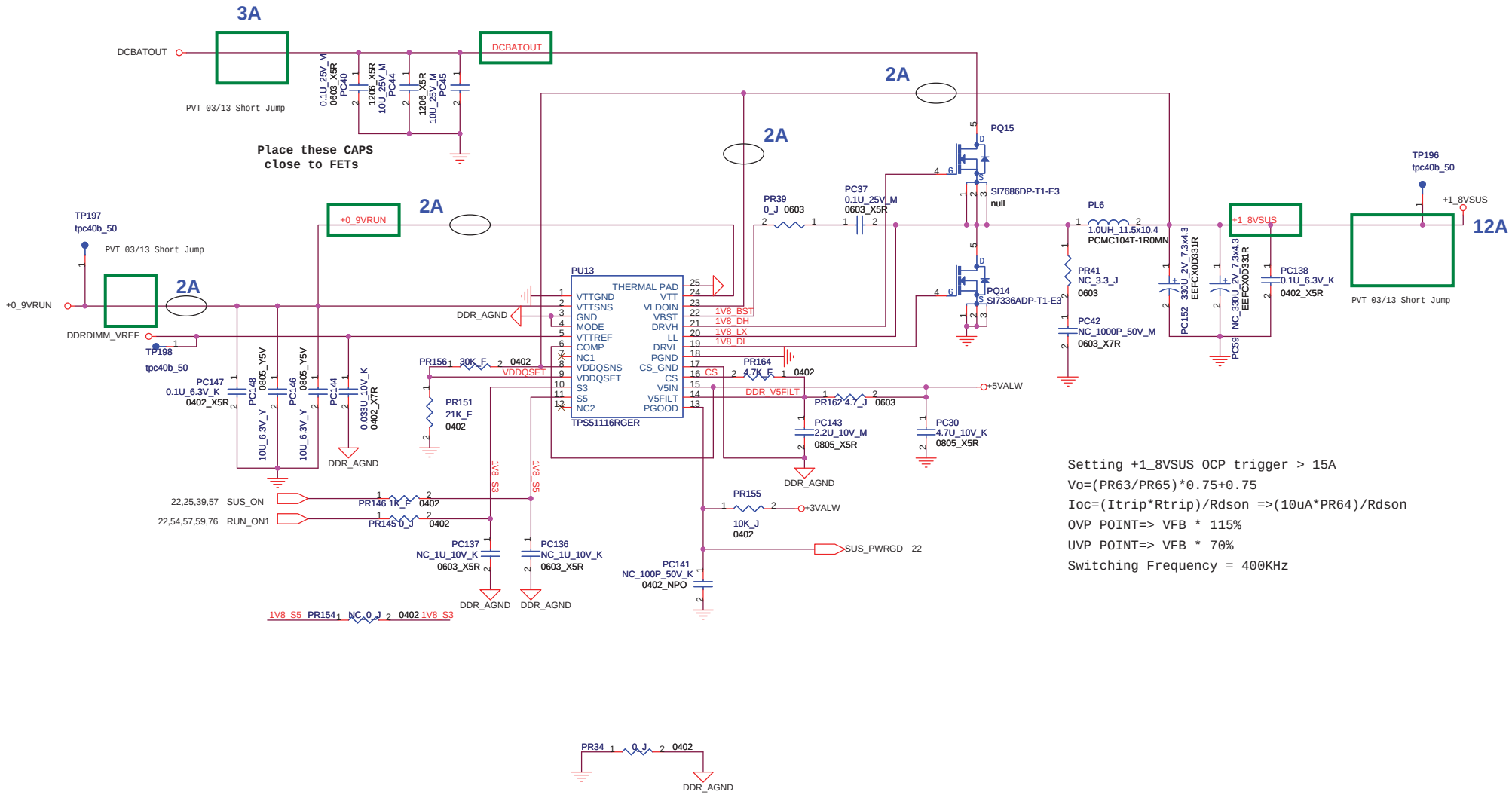

FOXCONN	HON HAI Precision Ind. Co., Ltd. CCPBG - R&D Division		
Title	DDR2 Power(+1_8V/+0_9V)		
Size A3	Document Number M760		Rev 1.0
Date: Thursday, March 27, 2008	Sheet 55 of 89		

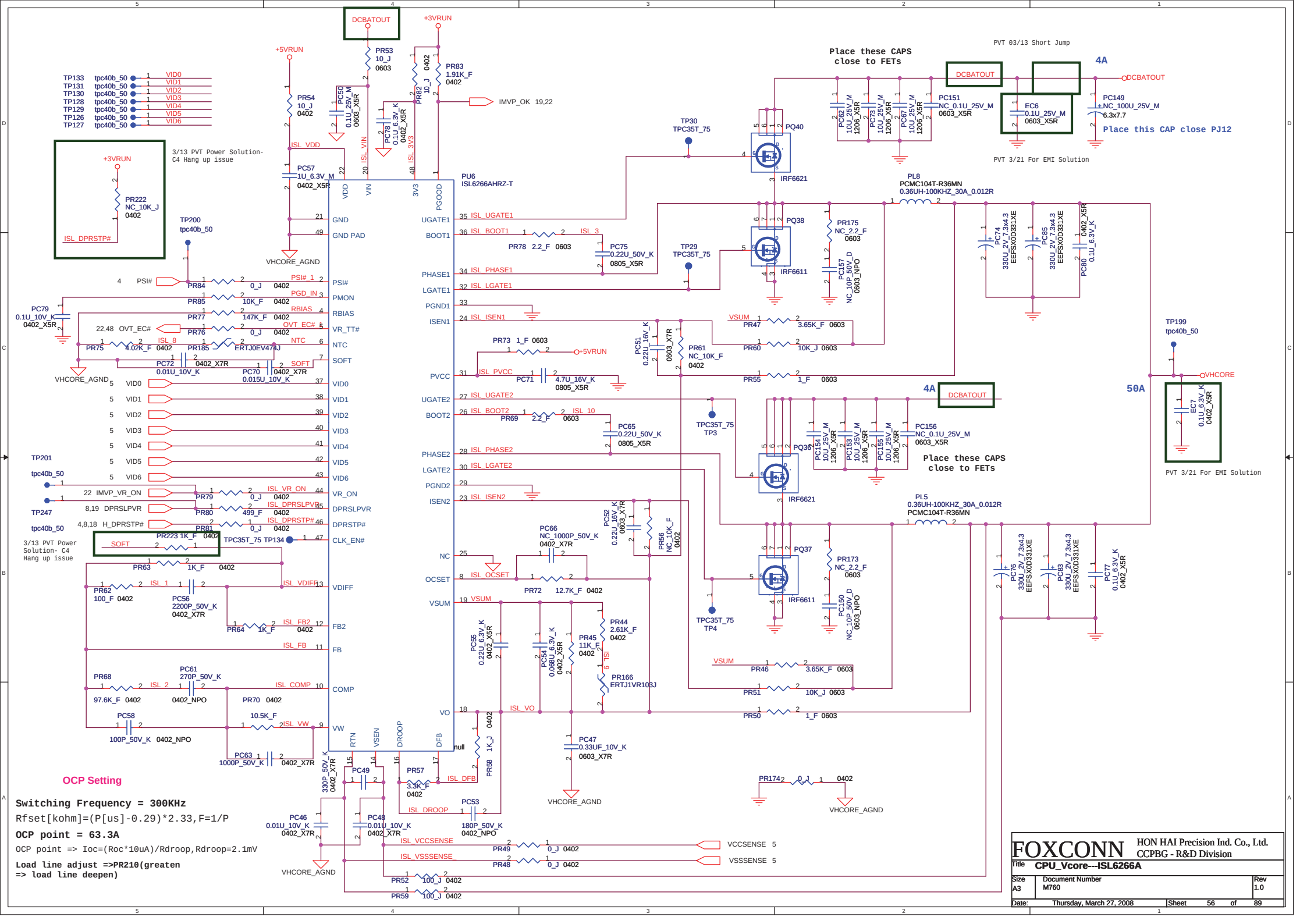
DCBATOUT
+3VRUN
+5VRUN
PR53 10_J 0603
PR83 1.91K_F 0402
PR82 10_J 0402
IMVP_OK 19,22
PR54 10_J 0402
PC50 0.1U_25V_M 0603_X5R
PC78 0.1U_6.3V_K 0402_X5R
ISL_VDD
ISL_VIN
ISL_3V3
PC57 1U_6.3V_M 0402_X5R
PU6 ISL6266AHRZ-T
VDD
VIN
3V3
PGOOD
GND
GND PAD
VHCORE_AGND
TP133 tpc40b_50
TP131 tpc40b_50
TP130 tpc40b_50
TP128 tpc40b_50
TP129 tpc40b_50
TP126 tpc40b_50
TP127 tpc40b_50
VID0
VID1
VID2
VID3
VID4
VID5
VID6
3/13 PVT Power Solution- C4 Hang up issue
PR222 NC_10K_J 0402
ISL_DPRSTP#
TP200 tpc40b_50
PSI#
PMON
RBIAS
VR_TT#
NTC
SOFT
VID0
VID1
VID2
VID3
VID4
VID5
VID6
VR_ON
DPRSLPVR
DPRSTP#
CLK_EN#
VDIFF
FB2
FB
COMP
VW
RTN
VSEN
DROOP
DFB
NC
OCSET
VSUM
VO
PR84 0_J 0402
PR85 10K_F 0402
PR77 147K_F 0402
PR76 0_J 0402
PR75 4.02K_F 0402
PR185 ERTJ0EV474J
PC79 0.1U_10V_K 0402_X5R
PC72 0.01U_10V_K 0402_X7R
PC70 0.015U_10V_K 0402_X7R
PR79 0_J 0402
PR80 499_F 0402
PR81 0_J 0402
PR223 1K_F 0402
PR63 1K_F 0402
PR62 100_F 0402
PC56 2200P_50V_K 0402_X7R
PR64 1K_F 0402
PR68 97.6K_F 0402
PC61 270P_50V_K 0402_NPO
PR70 0402
PC58 100P_50V_K 0402_NPO
10.5K_F
PC63 1000P_50V_K 0402_X7R
PC49 330P_50V_K 0402_X7R
PR57 3.3K_F 0402
PC53 180P_50V_K 0402_NPO
PC46 0.01U_10V_K 0402_X7R
PC48 0.01U_10V_K 0402_X7R
PR52 100_J 0402
PR59 100_J 0402
PR58 1K_J 0402
PC47 0.33UF_10V_K 0603_X7R
PR174 0_J 0402
PR49 0_J 0402
PR48 0_J 0402
VCCSENSE 5
VSSSENSE 5
ISL_VCCSENSE
ISL_VSSSENSE
ISL_DROOP
OCP Setting
Switching Frequency = 300KHz
Rfset[kohm]=(P[us]-0.29)*2.33,F=1/P
OCP point = 63.3A
OCP point => Ioc=(Roc*10uA)/Rdroop,Rdroop=2.1mV
Load line adjust =>PR210(greaten => load line deepen)
Place these CAPS close to FETs
PVT 03/13 Short Jump
4A
DCBATOUT
PC62 10U_25V_M 1206_X5R
PC73 10U_25V_M 1206_X5R
PC67 10U_25V_M 1206_X5R
PC151 NC_0.1U_25V_M 0603_X5R
EC6 0.1U_25V_M 0603_X5R
PC149 NC_100U_25V_M 6.3x7.7
Place this CAP close PJ12
PVT 3/21 For EMI Solution
TP30 TPC35T_75
PQ40
IRF6621
PL8 PCMC104T-R36MN 0.36UH-100KHZ_30A_0.012R
PQ38
IRF6611
PR175 NC_2.2_F 0603
PC157 NC_10P_50V_D 0603_NPO
PC74 330U_2V_7.3x4.3 EEFSX0D331XE
PC85 330U_2V_7.3x4.3 EEFSX0D331XE
PC80 0.1U_6.3V_K 0402_X5R
TP29 TPC35T_75
PR78 2.2_F 0603
PC75 0.22U_50V_K 0805_X5R
PR73 1_F 0603
PC51 0.22U_16V_K 0603_X7R
PR61 NC_10K_F 0402
VSUM
PR47 3.65K_F 0603
PR60 10K_J 0603
PR55 1_F 0603
PC71 4.7U_16V_K 0805_X5R
TP199 tpc40b_50
VHCORE
50A
EC7 0.1U_6.3V_K 0402_X5R
PVT 3/21 For EMI Solution
TPC35T_75 TP3
PC65 0.22U_50V_K 0805_X5R
PQ36
IRF6621
PC154 10U_25V_M 1206_X5R
PC153 10U_25V_M 1206_X5R
PC155 10U_25V_M 1206_X5R
PC156 NC_0.1U_25V_M 0603_X5R
Place these CAPS close to FETs
PL5 0.36UH-100KHZ_30A_0.012R PCMC104T-R36MN
PC52 0.22U_16V_K 0603_X7R
PR56 NC_10K_F 0402
PC66 NC_1000P_50V_K 0402_X7R
PR72 12.7K_F 0402
TPC35T_75 TP4
PQ37
IRF6611
PR173 NC_2.2_F 0603
PC150 NC_10P_50V_D 0603_NPO
PC76 330U_2V_7.3x4.3 EEFSX0D331XE
PC83 330U_2V_7.3x4.3 EEFSX0D331XE
PC77 0.1U_6.3V_K 0402_X5R
PC55 0.22U_6.3V_K 0402_X5R
PC54 0.068U_6.3V_K 0402_X5R
PR44 2.61K_F 0402
PR45 11K_F 0402
PR166 ERTJ1VR103J
PR46 3.65K_F 0603
PR51 10K_J 0603
PR50 1_F 0603
FOXCONN
HON HAI Precision Ind. Co., Ltd.
CCPBG - R&D Division
Title CPU_Vcore---ISL6266A
Size A3
Document Number M760
Rev 1.0
Date: Thursday, March 27, 2008
Sheet 56 of 89

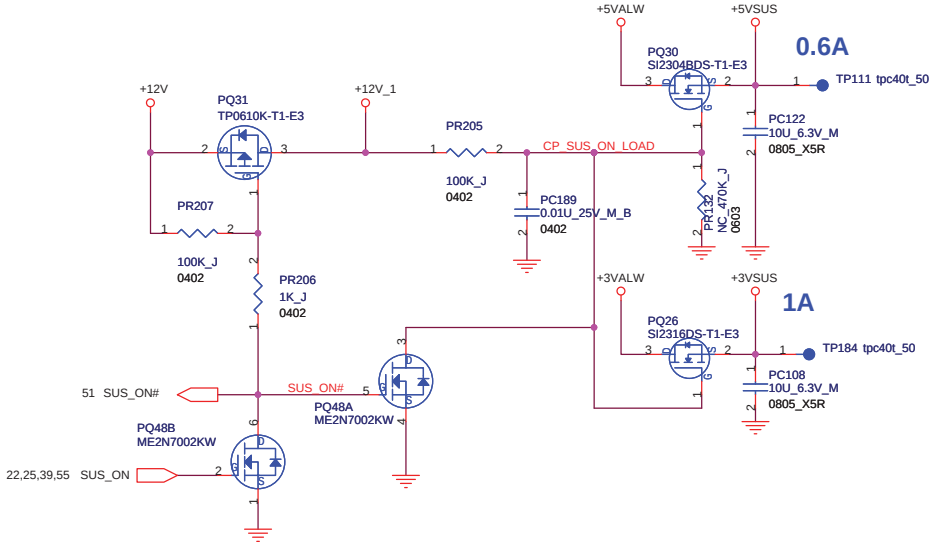

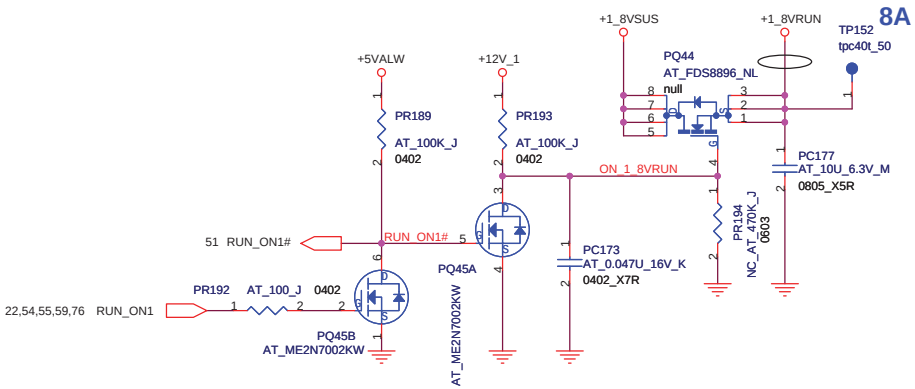

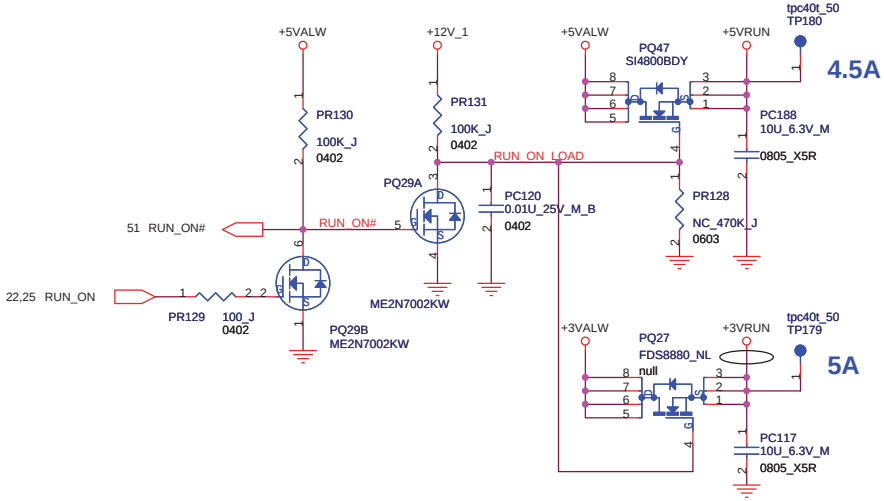

FOXCONN	HON HAI Precision Ind. Co., Ltd. CCPBG - R&D Division	
Title: Others power plan		
Size: A3	Document Number: M760	Rev: 1.0
Date: Thursday, March 27, 2008	Sheet 57 of 89	

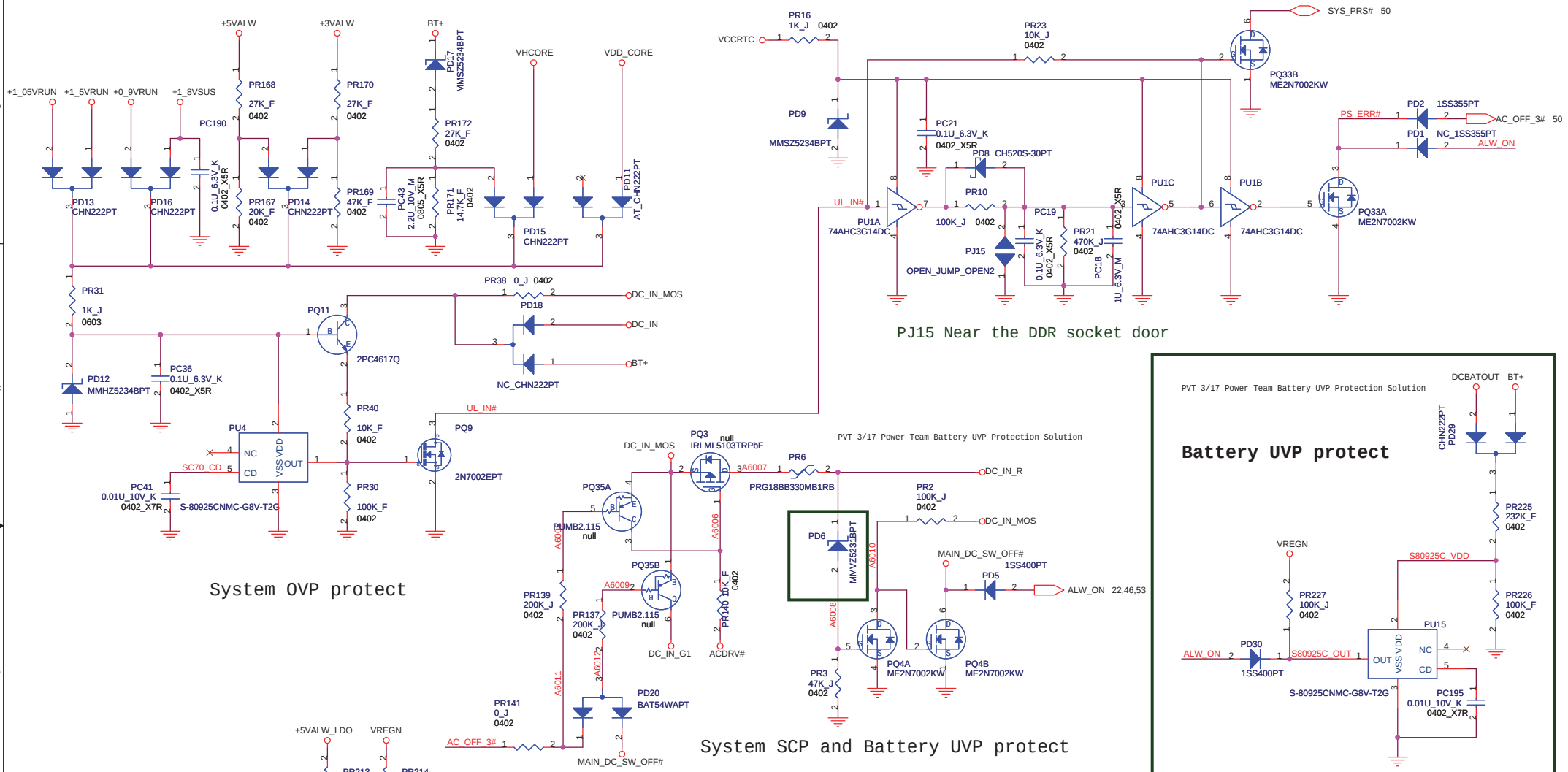

VIINP	90W adaptor
PWRLIMIT	1.8V/87W

adapter max load : 5.7A/3000ms
adapter OCP : 7.5Amax

FOXCONN
HON HAI Precision Ind. Co., Ltd.
CCPBG - R&D Division

Title: OVP protection

Size	Document Number	Rev
A3	M760	1.0

Date: Thursday, March 27, 2008 Sheet 58 of 89

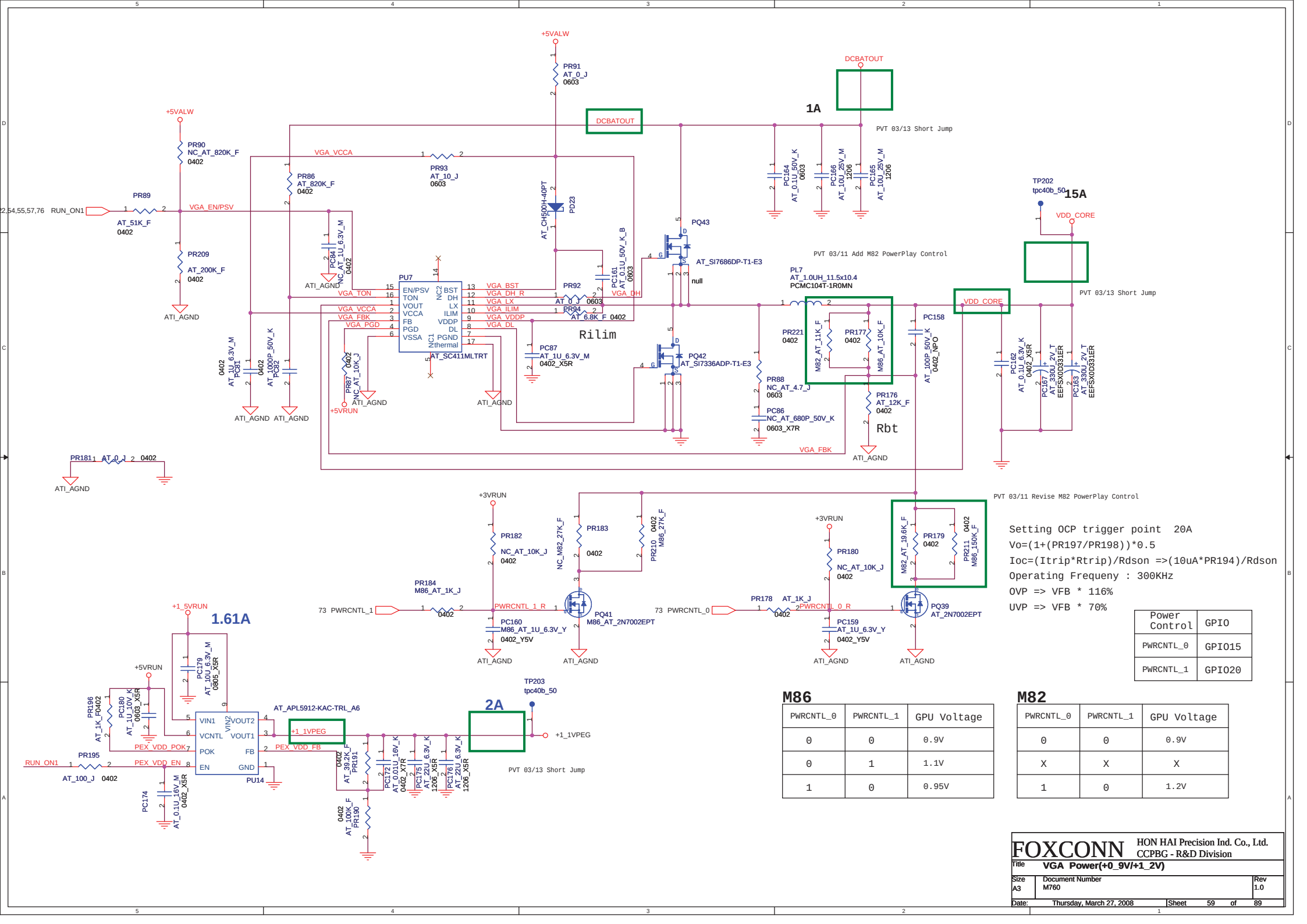
+5VALW
PR91
AT_0_J
0603
DCBATOUT
1A
PVT 03/13 Short Jump
PR90
NC_AT_820K_F
0402
VGA_VCCA
PR93
AT_10_J
0603
PR86
AT_820K_F
0402
PR89
AT_51K_F
0402
22,54,55,57,76 RUN_ON1
VGA_EN/PSV
PR209
AT_200K_F
0402
ATI_AGND
PC84
NC_AT_1U_6.3V_M
0402
AT_CH500H-40PT
PD23
PC164
AT_0.1U_50V_K
0603
PC166
AT_10U_25V_M
1206
PC165
AT_10U_25V_M
1206
TP202
tpc40b_50
15A
VDD_CORE
PVT 03/13 Short Jump
PQ43
AT_SI7686DP-T1-E3
null
PVT 03/11 Add M82 PowerPlay Control
PL7
AT_1.0UH_11.5x10.4
PCMC104T-1R0MN
PU7
EN/PSV
TON
VOUT
VCCA
FB
PGD
VSSA
BST
DH
LX
ILIM
VDDP
DL
PGND
thermal
AT_SC411MLTRT
VGA_TON
VGA_BST
VGA_DH_R
VGA_LX
VGA_ILIM
VGA_VDDP
VGA_DL
VGA_DH
PR92
AT_0
0603
PR94
AT_6.8K_F
0402
PC161
AT_0.1U_50V_K_B
0603
Rilim
PC87
AT_1U_6.3V_M
0402_X5R
PQ42
AT_SI7336ADP-T1-E3
PR221
0402
M82_AT_11K_F
PR177
0402
M86_AT_10K_F
PC158
AT_100P_50V_K
0402_NPO
PR88
NC_AT_4.7_J
0603
PC86
NC_AT_680P_50V_K
0603_X7R
PR176
AT_12K_F
0402
Rbt
VGA_FBK
PC162
AT_0.1U_6.3V_K
0402_X5R
PC167
AT_330U_2V_T
EEFSXOD331ER
PC163
AT_330U_2V_T
EEFSXOD331ER
PR181
AT_0_J
0402
PVT 03/11 Revise M82 PowerPlay Control
+3VRUN
PR182
NC_AT_10K_J
0402
NC_M82_27K_F
PR183
0402
PR210
M86_27K_F
PR184
M86_AT_1K_J
73 PWRCNTL_1
PWRCNTL_1_R
PC160
M86_AT_1U_6.3V_Y
0402_Y5V
PQ41
M86_AT_2N7002EPT
PR180
NC_AT_10K_J
0402
73 PWRCNTL_0
PR178
AT_1K_J
PWRCNTL_0_R
PC159
AT_1U_6.3V_Y
0402_Y5V
PQ39
AT_2N7002EPT
M82_AT_19.6K_F
PR179
0402
PR211
M86_150K_F
Setting OCP trigger point 20A
Vo=(1+(PR197/PR198))*0.5
Ioc=(Itrip*Rtrip)/Rdson =>(10uA*PR194)/Rdson
Operating Frequeny : 300KHz
OVP => VFB * 116%
UVP => VFB * 70%
+1_5VRUN
1.61A
PC179
AT_10U_6.3V_M
0805_X5R
PR196
AT_1K_F0402
PC180
AT_1U_10V_K
0603_X5R
AT_APL5912-KAC-TRL_A6
VIN1
VIN2
VCNTL
POK
EN
VOUT2
VOUT1
FB
GND
PU14
PEX_VDD_POK
PEX_VDD_EN
PEX_VDD_FB
+1_1VPEG
PR195
RUN_ON1
AT_100_J
0402
PC174
AT_0.1U_16V_M
0402_X5R
PR191
AT_39.2K_F
0402
PC172
AT_0.01U_16V_K
0402_X7R
PC175
AT_22U_6.3V_K
1206_X5R
PC176
AT_22U_6.3V_K
1206_X5R
PR190
AT_100K_F
0402
TP203
tpc40b_50
2A
+1_1VPEG
PVT 03/13 Short Jump
M86
PWRCNTL_0 | PWRCNTL_1 | GPU Voltage
0 | 0 | 0.9V
0 | 1 | 1.1V
1 | 0 | 0.95V
M82
PWRCNTL_0 | PWRCNTL_1 | GPU Voltage
0 | 0 | 0.9V
X | X | X
1 | 0 | 1.2V
Power Control | GPIO
PWRCNTL_0 | GPIO15
PWRCNTL_1 | GPIO20
FOXCONN
HON HAI Precision Ind. Co., Ltd.
CCPBG - R&D Division
Title
VGA Power(+0_9V/+1_2V)
Size
A3
Document Number
M760
Rev
1.0
Date:
Thursday, March 27, 2008
Sheet
59
of
89

FOXCONN

HON HAI Precision Ind. Co., Ltd.
CCPBG - R&D Division

Title: **GMCH Power**

Size	Document Number	Rev
A3	M760	1.0

Date: Thursday, March 27, 2008 Sheet 60 of 89

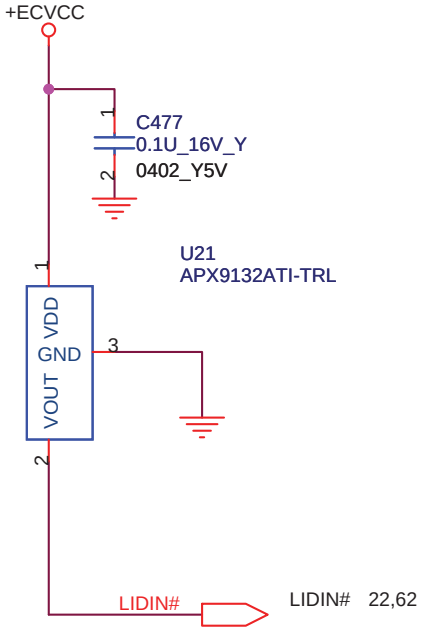

LID Switch

FOXCONN	HON HAI Precision Ind. Co., Ltd. CCPBG - R&D Division	
Title: LID SWITCH		
Size: A	Document Number: M760	Rev: 1.0
Date: Thursday, March 27, 2008	Sheet 61 of 89	

INVERTER CONN.

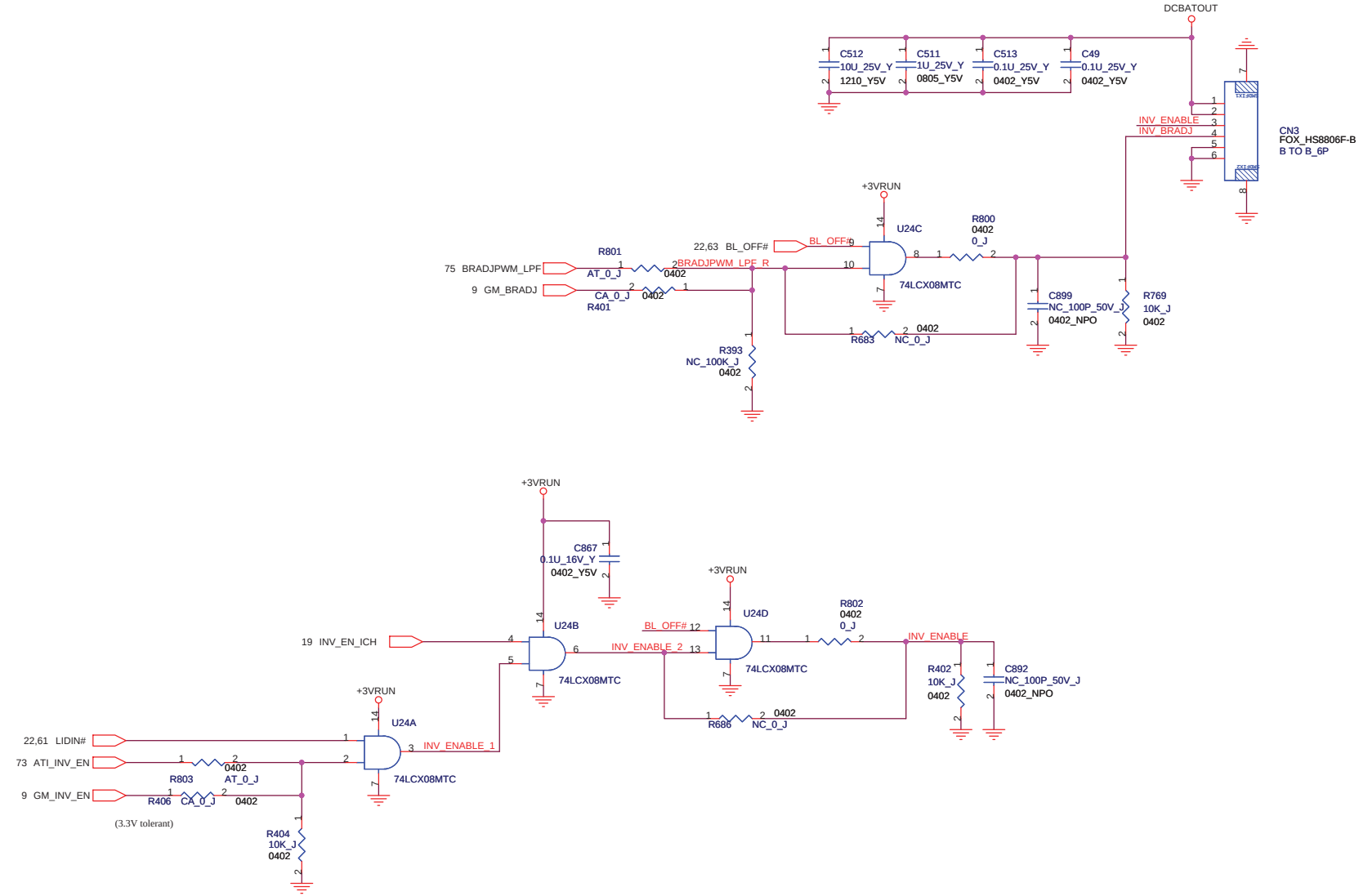

FOXCONN	HON HAI Precision Ind. Co., Ltd. CCPBG - R&D Division	
Title	Inverter	
Size A3	Document Number M760	Rev 1.0
Date: Thursday, March 27, 2008	Sheet 62 of 89	

Group1,Group2 should be close

LVDS

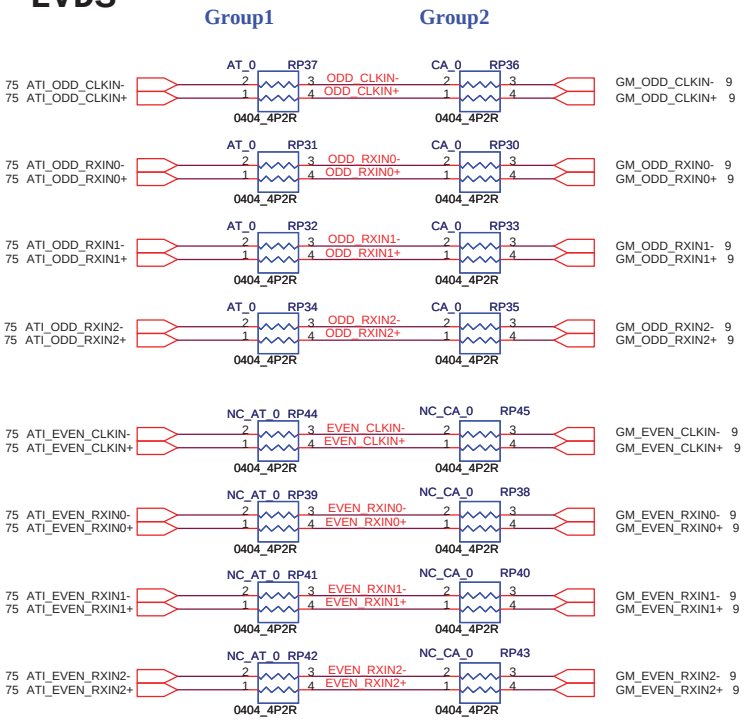

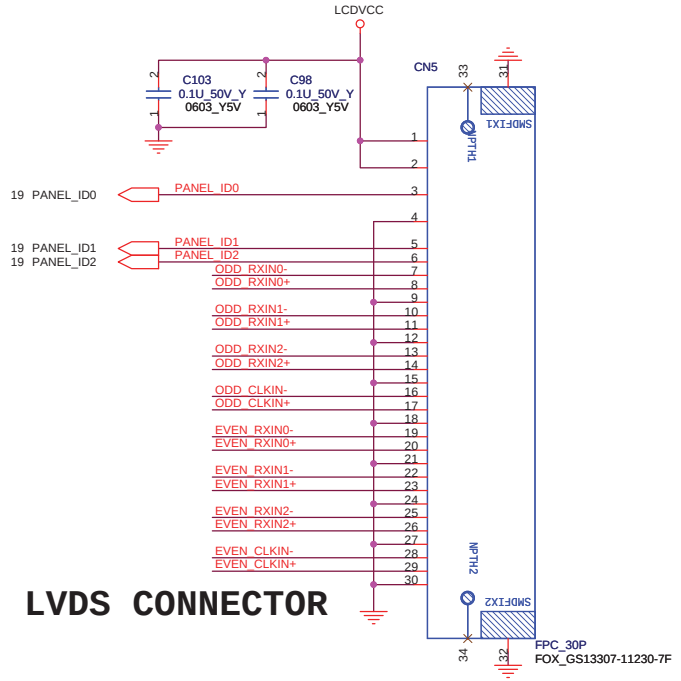

LVDS CONNECTOR

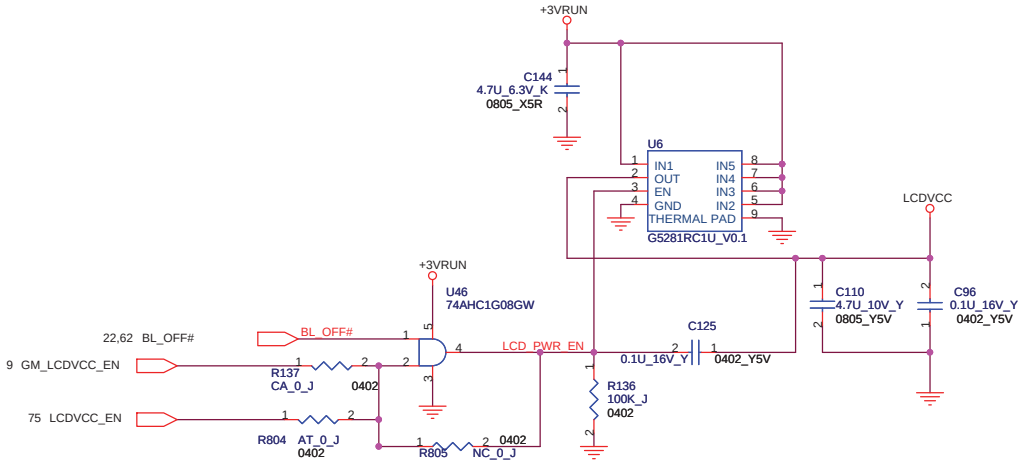

FOXCONN	HON HAI Precision Ind. Co., Ltd. CCPBG - R&D Division	
Title: LVDS		
Size: A3	Document Number: M760	Rev: 1.0
Date: Thursday, March 27, 2008	Sheet 63 of 89	

This layout is AMD recommend ,Please Follow it!

C734 CA_1U_10V_Y 0603 | C374 CA_10U_6.3V_Y 0805_Y5V | C721 CA_1000P_50V_M 0402_X7R | C694 CA_0.01U_25V_M 0402_X7R | C699 CA_0.1U_16V_Y 0402_Y5V | C733 CA_0.1U_16V_Y 0402_Y5V | C732 CA_0.1U_16V_Y 0402_Y5V

+3VRUN

HDMI_DDC_EN, HDMI_DET_5, HDMI_SDA_LSF, HDMI_SCL_LSF

R507 CA_0_J 0201 HDMI_SDA
R508 CA_0_J 0201 HDMI_SCL

PVT 03/11 Change the Path through the repeater for L model

C715 CA_0.1U_16V_Y 0402_Y5V | C693 CA_0.1U_16V_Y 0402_Y5V | C700 CA_0.1U_16V_Y 0402_Y5V | C705 CA_0.01U_25V_M 0402_X7R | C730 CA_1000P_50V_M 0402_X7R | C389 CA_10U_6.3V_Y 0805_Y5V

+3VRUN

Data line capacitance to GND need less than 10pF, so those parts need close to HDMI connector

73 ATI_HDMI_TXCA
73 ATI_HDMI_TXCA#
73 ATI_HDMI_D0
73 ATI_HDMI_D0#
73 ATI_HDMI_D1
73 ATI_HDMI_D1#
73 ATI_HDMI_D2
73 ATI_HDMI_D2#
DVT1 12/25 Delete H SKU path (thru PS8101)

U37 CA_PS8101QFN48G null

9 TMDS_B_CLK#	TMDS_B_CLK#	HDMI_TXC- R
9 TMDS_B_CLK	TMDS_B_CLK	HDMI_TXC+ R
9 TMDS_B_DATA0#	TMDS_B_DATA0#	TMDS_D0- R
9 TMDS_B_DATA0	TMDS_B_DATA0	TMDS_D0+ R
9 TMDS_B_DATA1#	TMDS_B_DATA1#	TMDS_D1- R
9 TMDS_B_DATA1	TMDS_B_DATA1	TMDS_D1+ R
9 TMDS_B_DATA2#	TMDS_B_DATA2#	TMDS_D2- R
9 TMDS_B_DATA2	TMDS_B_DATA2	TMDS_D2+ R

0404_4P2R RP72 CA_0: TMDS_D2+ R, TMDS_D2- R
R481 0_J 0603 | L56 ACM2012H-900-2P-T | R482 0_J 0603
TMDS_D2+ → HTX2+, TMDS_D2- → HTX2-, NC_90R-100MHZ_0.3A_0.3R

0404_4P2R RP73 CA_0: TMDS_D1+ R, TMDS_D1- R
R484 0_J 0603 | L59 ACM2012H-900-2P-T | R485 0_J 0603
TMDS_D1+ → HTX1+, TMDS_D1- → HTX1-, NC_90R-100MHZ_0.3A_0.3R

0404_4P2R RP74 CA_0: TMDS_D0+ R, TMDS_D0- R
R486 0_J 0603 | L61 ACM2012H-900-2P-T | R490 0_J 0603
TMDS_D0+ → HTX0+, TMDS_D0- → HTX0-, NC_90R-100MHZ_0.3A_0.3R

0404_4P2R RP75 CA_0: HDMI_TXC+ R, HDMI_TXC- R
R491 0_J 0603 | L64 ACM2012H-900-2P-T | R493 0_J 0603
HDMI_TXC+ → HTXC+, HDMI_TXC- → HTXC-, NC_90R-100MHZ_0.3A_0.3R

(TMDS inputs equalization control)
PC1,PC0 Configuration
00: 8 dB,
01: 4 dB,
10: 12 dB,
11: 0 dB

RP46 NC_AT_00404_4P2R: HDMI_SDA, HDMI_SCL → ATI_HDMI_SDA, ATI_HDMI_SCL
RP53 NC_CA_00404_4P2R: HDMIB_CTRL_DATA, HDMIB_CTRL_CLK → HDMIB_CTRL_DATA, HDMIB_CTRL_CLK

CA_499_F R574 0402

HDMIB_CTRL_DATA R568 CA_0_J 0201 HDMIB_SDA_LSF
HDMIB_CTRL_CLK R569 CA_0_J 0201 HDMIB_SCL_LSF

PVT 03/11 Change the Path through the repeater for L model

HDMI_PC0, HDMI_PC1, ATI_HDMI_DET_3, HDMI_RT_EN#

ByPass PS8101

+3VRUN
PVT 03/11 Stuff R505
R572 CA_2.2K_J 0402 HDMI_PC0
R573 CA_2.2K_J 0402 HDMI_PC1
R505 CA_2.2K_J 0402 HDMI_DDC_EN
R570 CA_2.2K_J 0402 HDMI_RT_EN#

RP76 AT_0 0404_4P2R: HDMIB_CTRL_DATA_1, HDMIB_CTRL_CLK_1 → ATI_HDMI_SDA 73, ATI_HDMI_SCL 73
RP77 CA_0 0404_4P2R: → HDMIB_CTRL_DATA 8, HDMIB_CTRL_CLK 8

U36 RClamp0524P.TCT null
HDMI_SCL, HDMI_SDA, HDMI_DET_5

+5VRUN
Q57 SI2301BDS-T1-E3
F3 16V-0.25_1206 SMD1206P025TF
+5VRUN_L188 → +5VRUN_F
C908 NC_0.1U_16V_M 0402_X5R
R831 10K_J 0402
D18 NC_SSM22LLPT null
R497 NC_0_J 0603
HDMI_LEAK_CTRL
19,22 PM_SLP_S3#
Q58 DTC144EUA
L65 33R-100MHZ_0805 BCMS201209A330
+5VRUN_L188
TP92 26MIL
PVT 03/27 Modify HDMI 5V Voltage Drop Solution as M770

CN21 HDMI_19P FOX_QJ5119L-NK03-4F
HTX2+, HTX2-, HTX1+, HTX1-, HTX0+, HTX0-, HTXC+, HTXC-, HDMI_CEC, HDMI_SCL, HDMI_SDA, HDMI_+5VRUN, HDMI_DET_5
PTH1 PTH2 PTH3 PTH4
C670 0.1U_16V_K 0402_X7R
R496 100K_J 0402

R766 CA_5.76K_F 0402
R504 AT_2.2K_J 0402
R518 AT_2.2K_J 0402
R567 AT_0_J 0201 → ATI_HDMI_DET_3 65,73
Q34B 2N7002DW-7-F
PVT 03/11 Change to EVT2 Solution
HDMI_DET_5
Q34A 2N7002DW-7-F
TMDS_B_HPD# 9
TMDS_B_HPD# = 900mV
R510 CA_2.2K_J 0402

RP55 AT_0: HDMI_TXC-, HDMI_TXC+ → ATI_HDMI_TXCA, ATI_HDMI_TXCA#
RP57 AT_0: TMDS_D0-, TMDS_D0+ → ATI_HDMI_D0, ATI_HDMI_D0#
RP59 AT_0: TMDS_D1-, TMDS_D1+ → ATI_HDMI_D1, ATI_HDMI_D1#
RP61 AT_0: TMDS_D2-, TMDS_D2+ → ATI_HDMI_D2, ATI_HDMI_D2#
0404_4P2R
R276 AT_499_F 0402 | R275 AT_499_F 0402 | R268 AT_499_FAT 0402 | R266 AT_499_FAT 0402 | R265 AT_499_F 0402 | R263 AT_499_FAT 0402 | R257 AT_499_F 0402 | R255 AT_499_F 0402

+5VRUN
Q13 AT_2N7002EPT

PVT 03/11 Change the Path through the repeater for L model
+3VRUN
D11 BAS316
R513 NC_CA_0_J 0402
R512 AT_1K_J 0402
R531 AT_1K_J 0402
R515 2.2K_J 0402
R538 2.2K_J 0402
R511 2.2K_J 0402
R506 2.2K_J 0402
HDMIB_CTRL_CLK_1 → HDMI_SCL
HDMIB_CTRL_DATA_1 → HDMI_SDA
Q35A AT_UPA672T-T1-A
Q35B AT_UPA672T-T1-A

FOXCONN	HON HAI Precision Ind. Co., Ltd. CCPBG - R&D Division		
Title	HDMI		
Size A3	Document Number M760		Rev 1.0
Date: Thursday, March 27, 2008		Sheet 64 of 89	

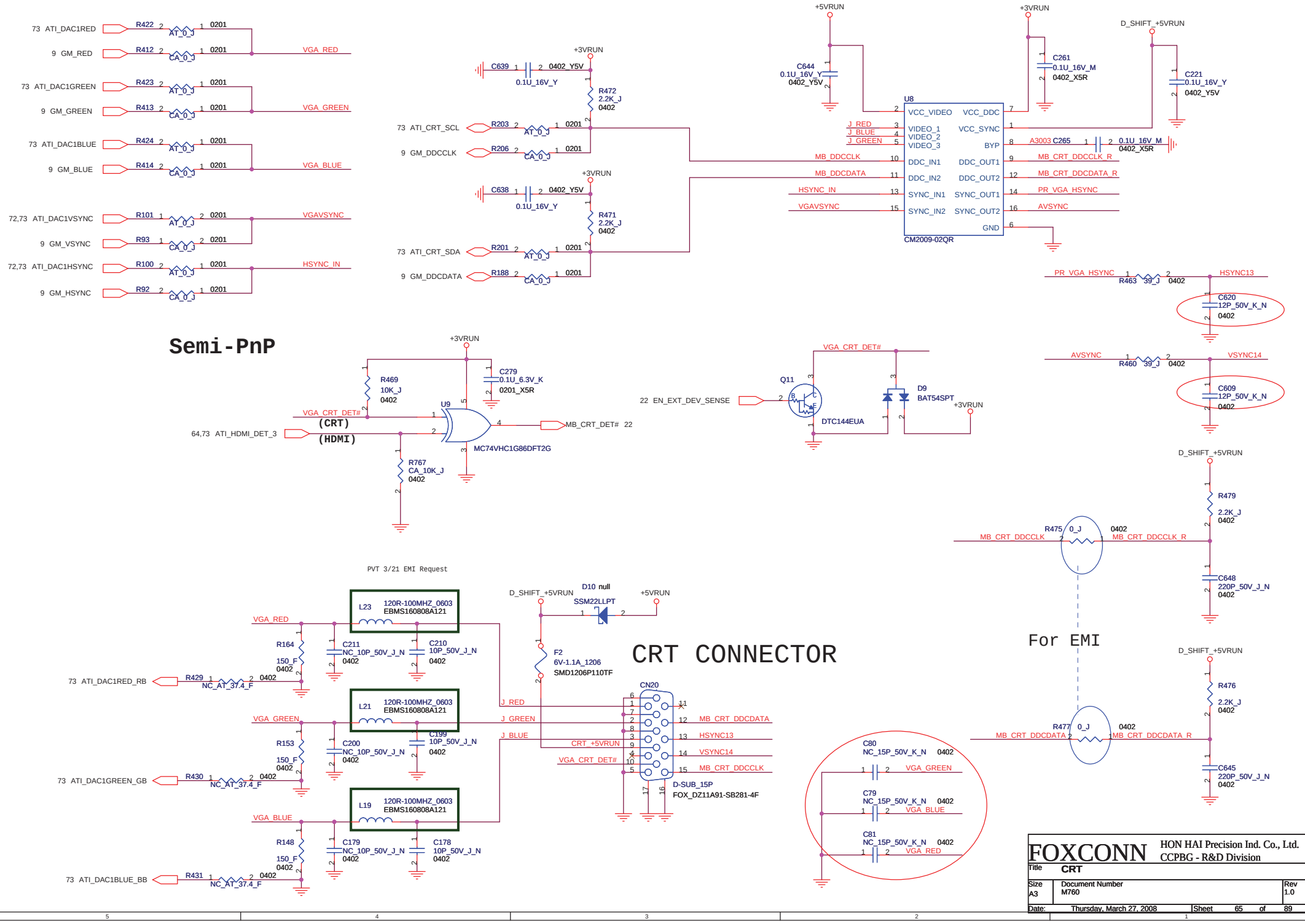
73 ATI_DAC1RED
R422 2 AT_0_J 1 0201
9 GM_RED
R412 2 CA_0_J 1 0201
VGA_RED
73 ATI_DAC1GREEN
R423 2 AT_0_J 1 0201
9 GM_GREEN
R413 2 CA_0_J 1 0201
VGA_GREEN
73 ATI_DAC1BLUE
R424 2 AT_0_J 1 0201
9 GM_BLUE
R414 2 CA_0_J 1 0201
VGA_BLUE
72,73 ATI_DAC1VSYNC
R101 1 AT_0_J 2 0201
9 GM_VSYNC
R93 1 CA_0_J 2 0201
VGAVSYNC
72,73 ATI_DAC1HSYNC
R100 2 AT_0_J 1 0201
9 GM_HSYNC
R92 2 CA_0_J 1 0201
HSYNC_IN
+3VRUN
C639 1 2 0402_Y5V
0.1U_16V_Y
R472 2.2K_J 0402
73 ATI_CRT_SCL
R203 2 AT_0_J 1 0201
9 GM_DDCCLK
R206 2 CA_0_J 1 0201
C638 1 2 0402_Y5V
0.1U_16V_Y
R471 2.2K_J 0402
73 ATI_CRT_SDA
R201 2 AT_0_J 1 0201
9 GM_DDCDATA
R188 2 CA_0_J 1 0201
+5VRUN
C644 0.1U_16V_Y 0402_Y5V
+3VRUN
C261 0.1U_16V_M 0402_X5R
D_SHIFT_+5VRUN
C221 0.1U_16V_Y 0402_Y5V
U8
VCC_VIDEO
VCC_DDC
J_RED
J_BLUE
J_GREEN
VIDEO_1
VIDEO_2
VIDEO_3
VCC_SYNC
BYP
A3003 C265 0.1U_16V_M 0402_X5R
MB_DDCCLK
MB_DDCDATA
HSYNC_IN
VGAVSYNC
DDC_IN1
DDC_IN2
SYNC_IN1
SYNC_IN2
DDC_OUT1
DDC_OUT2
SYNC_OUT1
SYNC_OUT2
GND
MB_CRT_DDCCLK_R
MB_CRT_DDCDATA_R
PR_VGA_HSYNC
AVSYNC
CM2009-02QR
PR_VGA_HSYNC
R463 39_J 0402
HSYNC13
C620 12P_50V_K_N 0402
AVSYNC
R460 39_J 0402
VSYNC14
C609 12P_50V_K_N 0402
Semi-PnP
+3VRUN
R469 10K_J 0402
C279 0.1U_6.3V_K 0201_X5R
U9
VGA_CRT_DET#
(CRT)
(HDMI)
64,73 ATI_HDMI_DET_3
MB_CRT_DET# 22
MC74VHC1G86DFT2G
R767 CA_10K_J 0402
VGA_CRT_DET#
Q11
22 EN_EXT_DEV_SENSE
DTC144EUA
D9 BAT54SPT
+3VRUN
D_SHIFT_+5VRUN
R479 2.2K_J 0402
R475 0_J 0402
MB_CRT_DDCCLK
MB_CRT_DDCCLK_R
C648 220P_50V_J_N 0402
For EMI
D_SHIFT_+5VRUN
R476 2.2K_J 0402
R477 0_J 0402
MB_CRT_DDCDATA
MB_CRT_DDCDATA_R
C645 220P_50V_J_N 0402
PVT 3/21 EMI Request
CRT CONNECTOR
VGA_RED
L23 120R-100MHZ_0603 EBMS160808A121
R164 150_F 0402
C211 NC_10P_50V_J_N 0402
C210 10P_50V_J_N 0402
73 ATI_DAC1RED_RB
R429 1 NC_AT_37.4_F 2 0402
VGA_GREEN
L21 120R-100MHZ_0603 EBMS160808A121
R153 150_F 0402
C200 NC_10P_50V_J_N 0402
C199 10P_50V_J_N 0402
73 ATI_DAC1GREEN_GB
R430 1 NC_AT_37.4_F 2 0402
VGA_BLUE
L19 120R-100MHZ_0603 EBMS160808A121
R148 150_F 0402
C179 NC_10P_50V_J_N 0402
C178 10P_50V_J_N 0402
73 ATI_DAC1BLUE_BB
R431 1 NC_AT_37.4_F 2 0402
D_SHIFT_+5VRUN
D10 null SSM22LLPT
+5VRUN
F2 6V-1.1A_1206 SMD1206P110TF
J_RED
J_GREEN
J_BLUE
CRT_+5VRUN
VGA_CRT_DET#
CN20
MB_CRT_DDCDATA
HSYNC13
VSYNC14
MB_CRT_DDCCLK
D-SUB_15P
FOX_DZ11A91-SB281-4F
C80 NC_15P_50V_K_N 0402
VGA_GREEN
C79 NC_15P_50V_K_N 0402
VGA_BLUE
C81 NC_15P_50V_K_N 0402
VGA_RED
FOXCONN
HON HAI Precision Ind. Co., Ltd.
CCPBG - R&D Division
Title
CRT
Size
A3
Document Number
M760
Rev
1.0
Date:
Thursday, March 27, 2008
Sheet
65
of
89

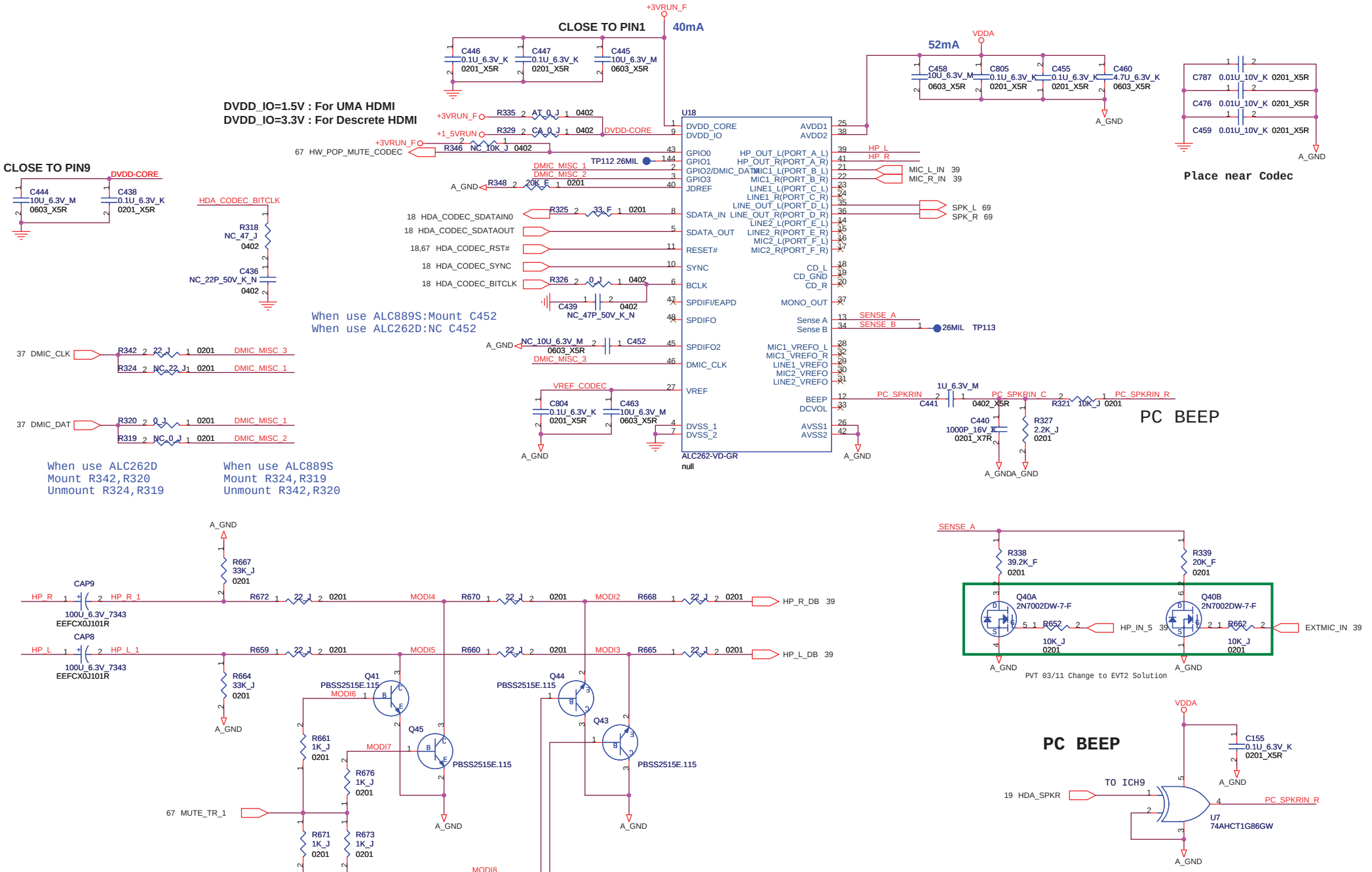

FOXCONN	HON HAI Precision Ind. Co., Ltd. CCPBG - R&D Division	
Title	AUDIO(CODEC)	
Size A3	Document Number M760	Rev 1.0
Date: Thursday, March 27, 2008	Sheet 66 of 89	

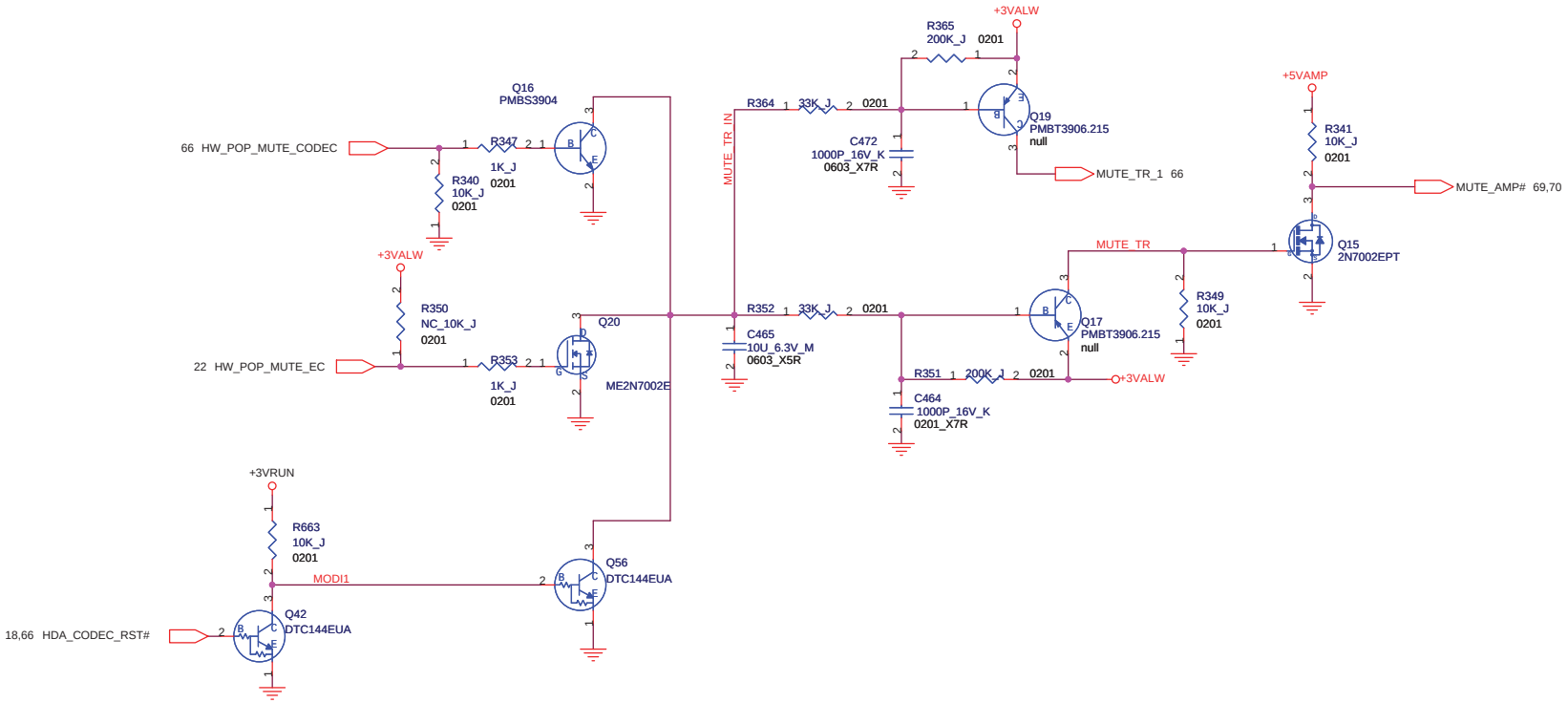

Q42 for 1.5V power level

FOXCONN	HON HAI Precision Ind. Co., Ltd. CCPBG - R&D Division	
Title	AUDIO (MUTE)	
Size A3	Document Number M760	Rev 1.0
Date: Thursday, March 27, 2008	Sheet 67 of 89	

AUDIO POWER(4.75V/200mA)

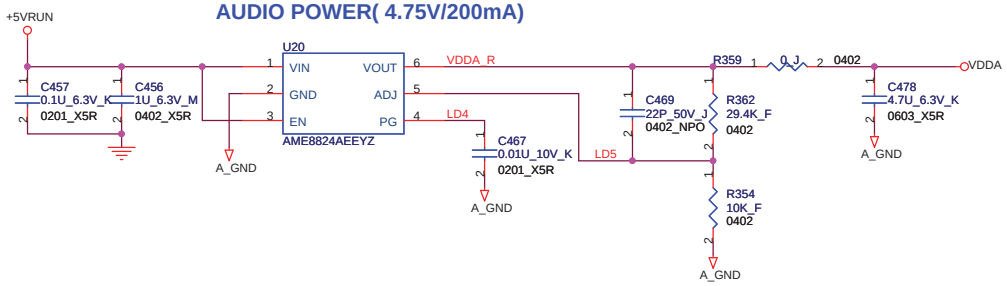

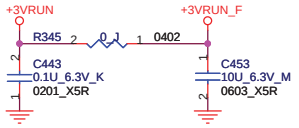

FOXCONN	HON HAI Precision Ind. Co., Ltd. CCPBG - R&D Division	
Title	AUDIO POWER	
Size A3	Document Number M760	Rev 1.0
Date: Thursday, March 27, 2008	Sheet 68 of 89	

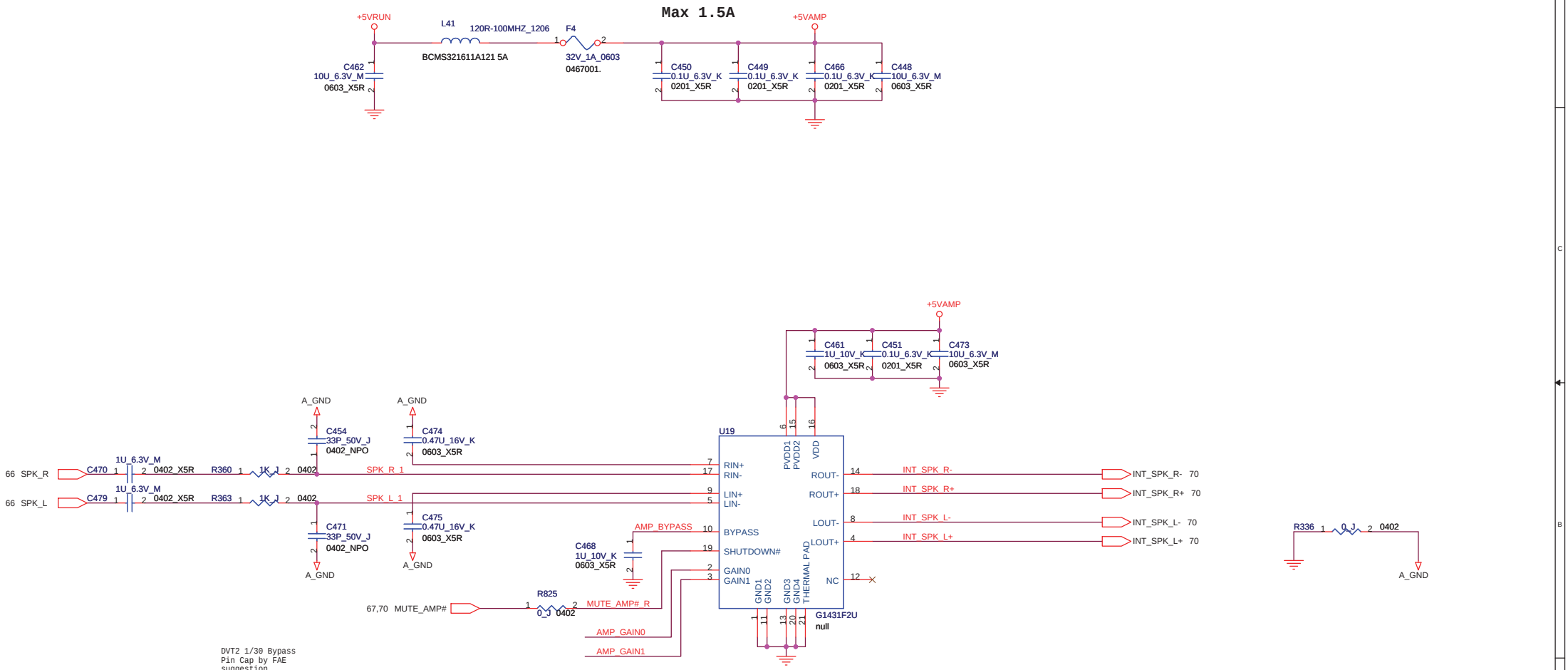

SPEAKER AMP

	GAIN0	GAIN1
6 dB	0	0
10 dB	0	1
15.6 dB	1	0
21.6 dB	1	1

FOXCONN
HON HAI Precision Ind. Co., Ltd.
CCPBG - R&D Division

Title	AUDIO SPEAKER AMP	
Size A3	Document Number M760	Rev 1.0
Date: Thursday, March 27, 2008	Sheet 69 of 89	

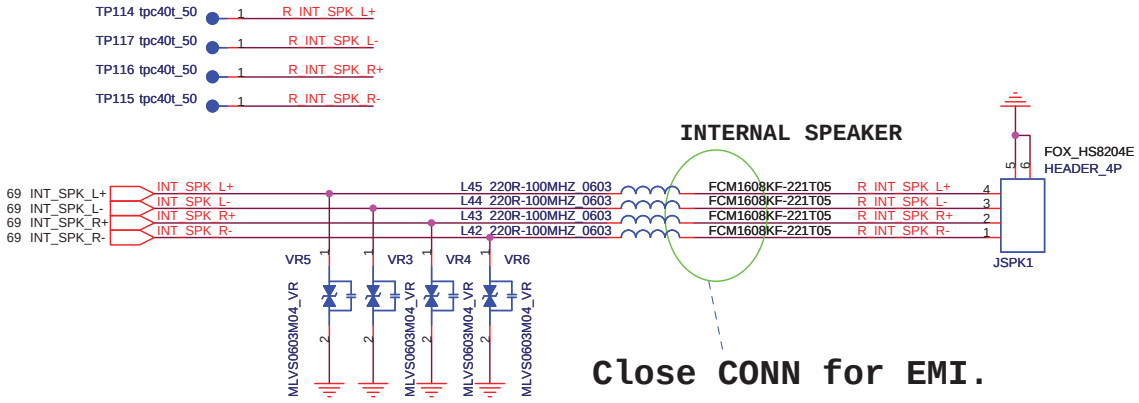

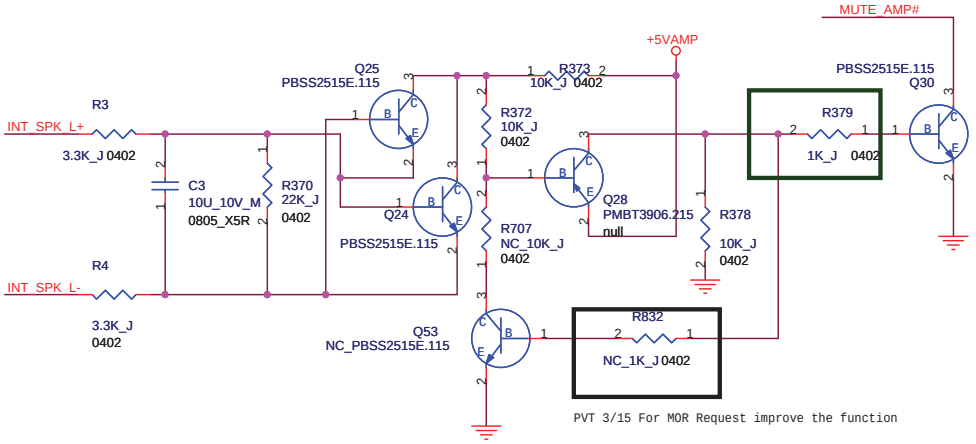

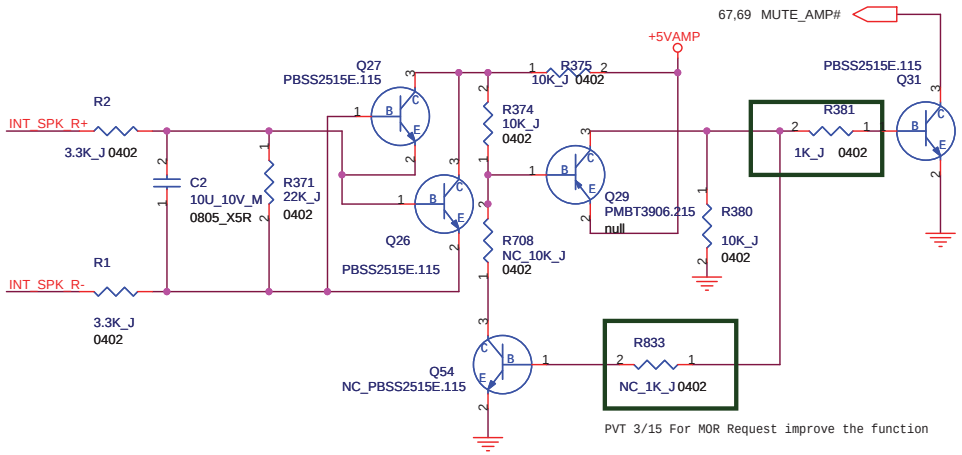

For Mor request,add the speaker cable short protection circuit

FOXCONN	HON HAI Precision Ind. Co., Ltd. CCPBG - R&D Division	
Title	AUDIO SPEAKER CONNECTOR	
Size B	Document Number M760	Rev 1.0
Date: Thursday, March 27, 2008	Sheet 70 of 89	

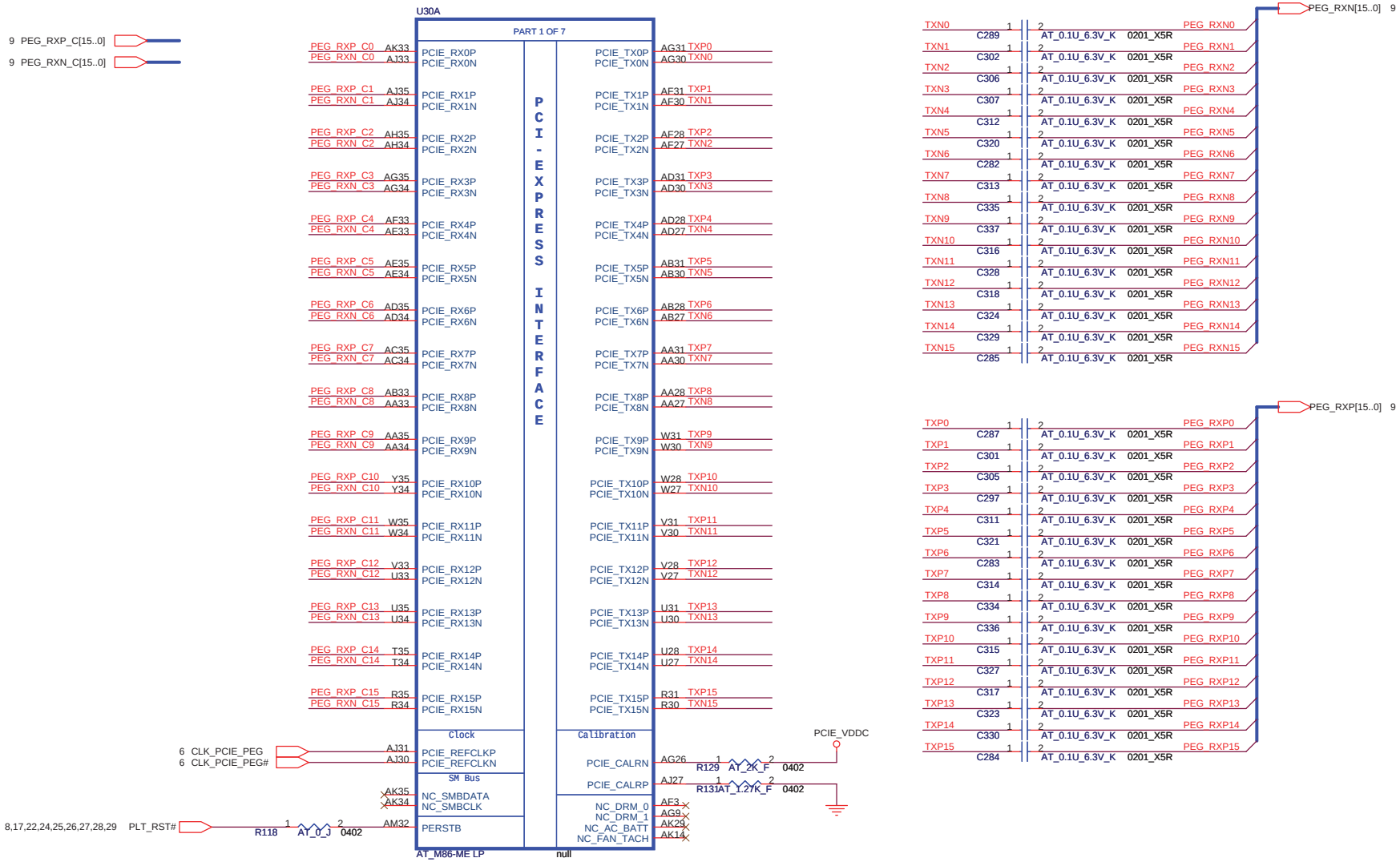

FOXCONN HON HAI Precision Ind. Co., Ltd.
CCPBG - R&D Division

Title	VGA (PCI EXPRESS) 1 OF 6	
Size A3	Document Number M760	Rev 1.0
Date: Thursday, March 27, 2008	Sheet 71 of 89	

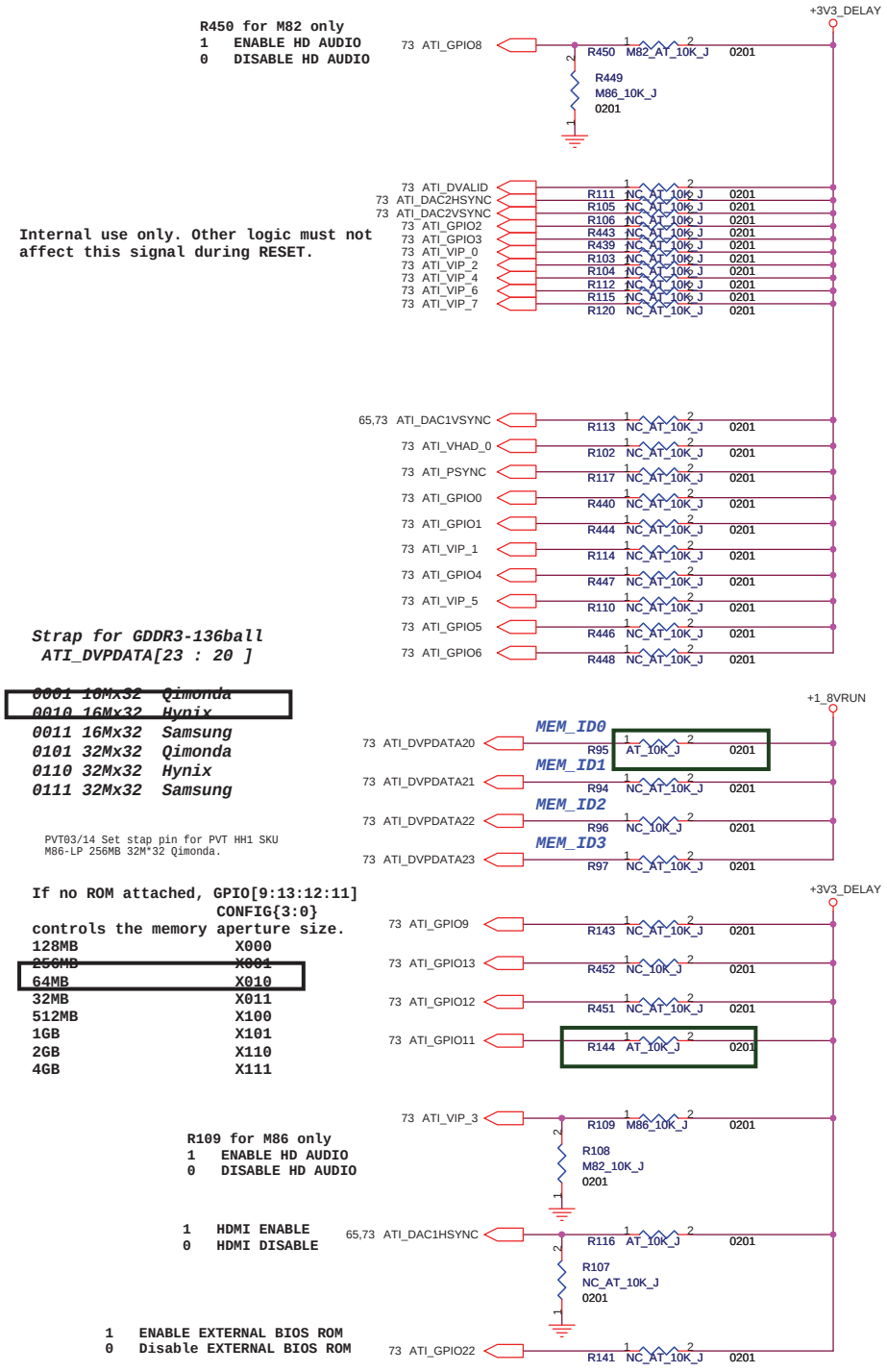

CONFIGURATION STRAPS

ALLOW FOR PULLUP PADS FOR THESE STRAPS AND IF THESE GPIOS ARE USED, THEY MUST NOT CONFLICT DURING RESET

RECOMMENDED SETTINGS
0= DO NOT INSTALL RESISTOR
1 = INSTALL 10K RESISTOR
X = DESIGN DEPENDANT
NA = NOT APPLICABLE

STRAPS	PIN	DESCRIPTION OF DEFAULT SETTINGS	
BIF_MSI_DIS	VIP1	MESSAGE SIGNAL INTERRUPT ENABLED	0
BIF_AUDIO_EN	VIP3	ENABLE HD AUDIO (SEE NOTE 1)	X
BIF_64BAR_EN_A	VIP5	64 BIT BARS DISABLED	0
TX_PWRS_ENB	GPIO0	PCIE FULL TX OUTPUT SWING (0: 50% Tx output swing, 1: Full Tx output swing)	X
TX_DEEMPH_EN	GPIO1	PCIE TRANSMITTER DE-EMPHASIS ENABLED	X
BIF_DEBUG_ACCESS	GPIO4	DEBUG SIGNALS NOT MUXED OUT	0
BIOS_ROM_EN	GPIO_22_ROMCSB	ENABLE EXTERNAL BIOS ROM	1
ROMIDCFG(3:0)	GPIO[13:11,9]	SERIAL ROM TYPE OR MEMORY APERTURE SIZE SELECT	X X X X
VIP_DEVICE_STRAP_ENA	VSYNC	IGNORE VIP DEVICE STRAPS	0
BIF_VGA DIS	PSYNC	VGA ENABLED	O
BIF_HDMI_EN	HSYNC	HDMI ENABLE (SEE NOTE 2)	X
MEM_TYPE	ANY UNUSED GPIO OR DVP THAT ARE NOT CONFIG STRAPS FOR EXAMPLE DVPDATA20:23 IN THIS DESIGN	MEMORY TYPE,MAKE AND SIZE INFO	X X X X
BIF_GEN2_EN_A	GPIO_5	1 = Advertises the PCI-E device as 5.0 GT/s capable at power-on. 0 = Advertises the PCI-E device as 2.5 GT/s capable at power-on	0
DEBUG_ I2C_ENABLE	GPIO_6	Disable DEBUG_I2C	0

FOXCONN HON HAI Precision Ind. Co., Ltd.
CCPBG - R&D Division

Title: VGA (STRAP) 2 OF 6

Size: A3 | Document Number: M760 | Rev: 1.0

Date: Thursday, March 27, 2008 | Sheet 72 of 89

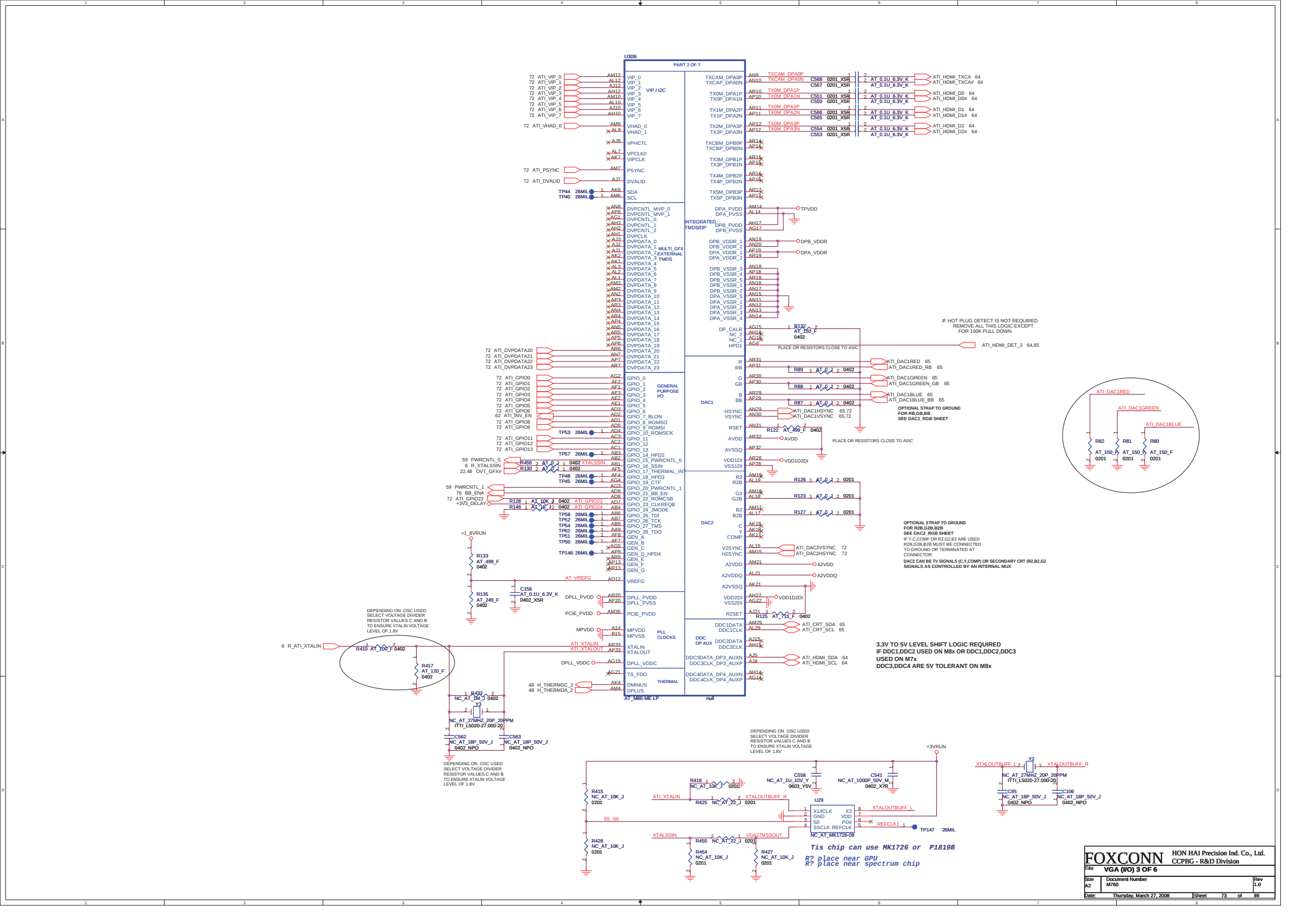
U30B
PART 2 OF 7
AT_M86-ME LP
null
VIP / I2C
MULTI_GFX EXTERNAL TMDS
INTEGRATED TMDS/DP
GENERAL PURPOSE I/O
DAC1
DAC2
PLL CLOCKS
DDC DP AUX
THERMAL
IF HOT PLUG DETECT IS NOT REQUIRED REMOVE ALL THIS LOGIC EXCEPT FOR 100K PULL DOWN
PLACE OR RESISTORS CLOSE TO ASIC
OPTIONAL STRAP TO GROUND FOR R2B,G2B,B2B SEE DAC1_RGB SHEET
OPTIONAL STRAP TO GROUND FOR R2B,G2B,B2B SEE DAC2_RGB SHEET
DAC2 CAN BE TV SIGNALS (C,Y,COMP) OR SECONDARY CRT (R2,B2,G2 SIGNALS AS CONTROLLED BY AN INTERNAL MUX
3.3V TO 5V LEVEL SHIFT LOGIC REQUIRED IF DDC1,DDC2 USED ON M8x OR DDC1,DDC2,DDC3 USED ON M7x DDC3,DDC4 ARE 5V TOLERANT ON M8x
DEPENDING ON OSC USED SELECT VOLTAGE DIVIDER RESISTOR VALUES C AND B TO ENSURE XTALIN VOLTAGE LEVEL OF 1.8V
Tis chip can use MK1726 or P1819B
R? place near GPU
R? place near spectrum chip
FOXCONN
HON HAI Precision Ind. Co., Ltd.
CCPBG - R&D Division
Title VGA (I/O) 3 OF 6
Size A2
Document Number M760
Rev 1.0
Date: Thursday, March 27, 2008
Sheet 73 of 89

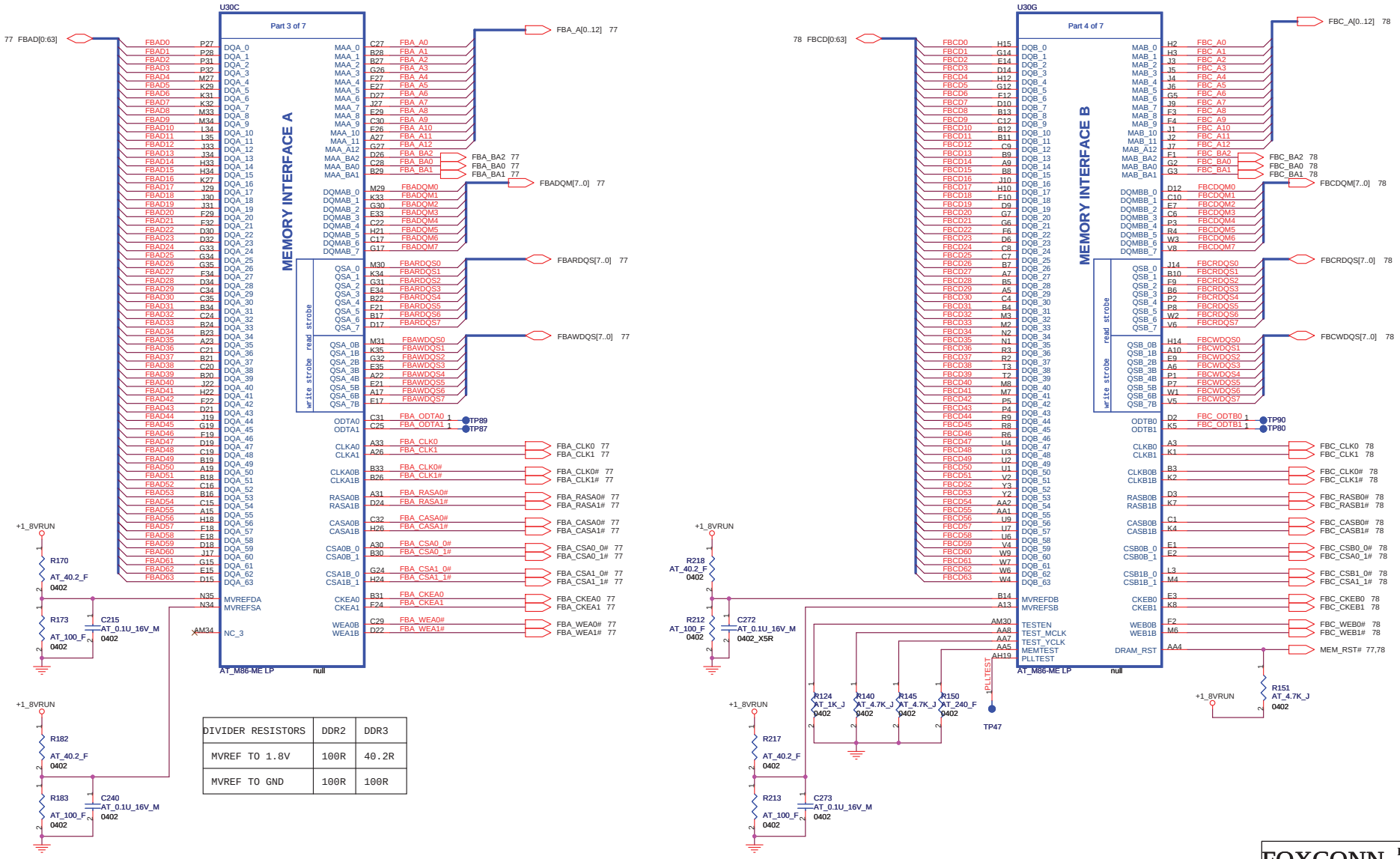

DIVIDER RESISTORS	DDR2	DDR3
MVREF TO 1.8V	100R	40.2R
MVREF TO GND	100R	100R

FOXCONN
HON HAI Precision Ind. Co., Ltd.
CCPBG - R&D Division

Title: VGA (MEMORY BUS) 4 OF 6

Size: Custom | Document Number: M760 | Rev: 1.0

Date: Thursday, March 27, 2008 | Sheet 74 of 89

This layout is AMD recommend ,Please Follow it!

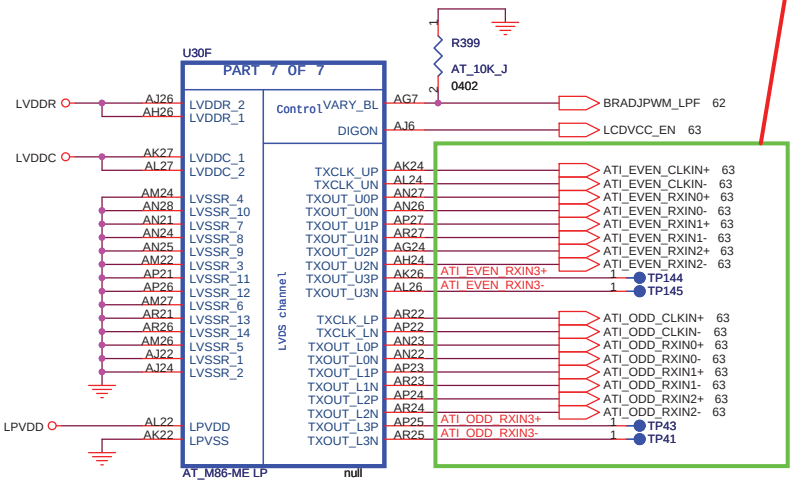

TXCLK =U=EVEN
TXOUT=U=EVEN
TXCLK =L=ODD
TXOUT=L=ODD

FOXCONN	HON HAI Precision Ind. Co., Ltd. CCPBG - R&D Division	
Title	VGA (LVDS) 5 OF 6	
Size A3	Document Number M760	Rev 1.0
Date: Thursday, March 27, 2008	Sheet 75 of 89	

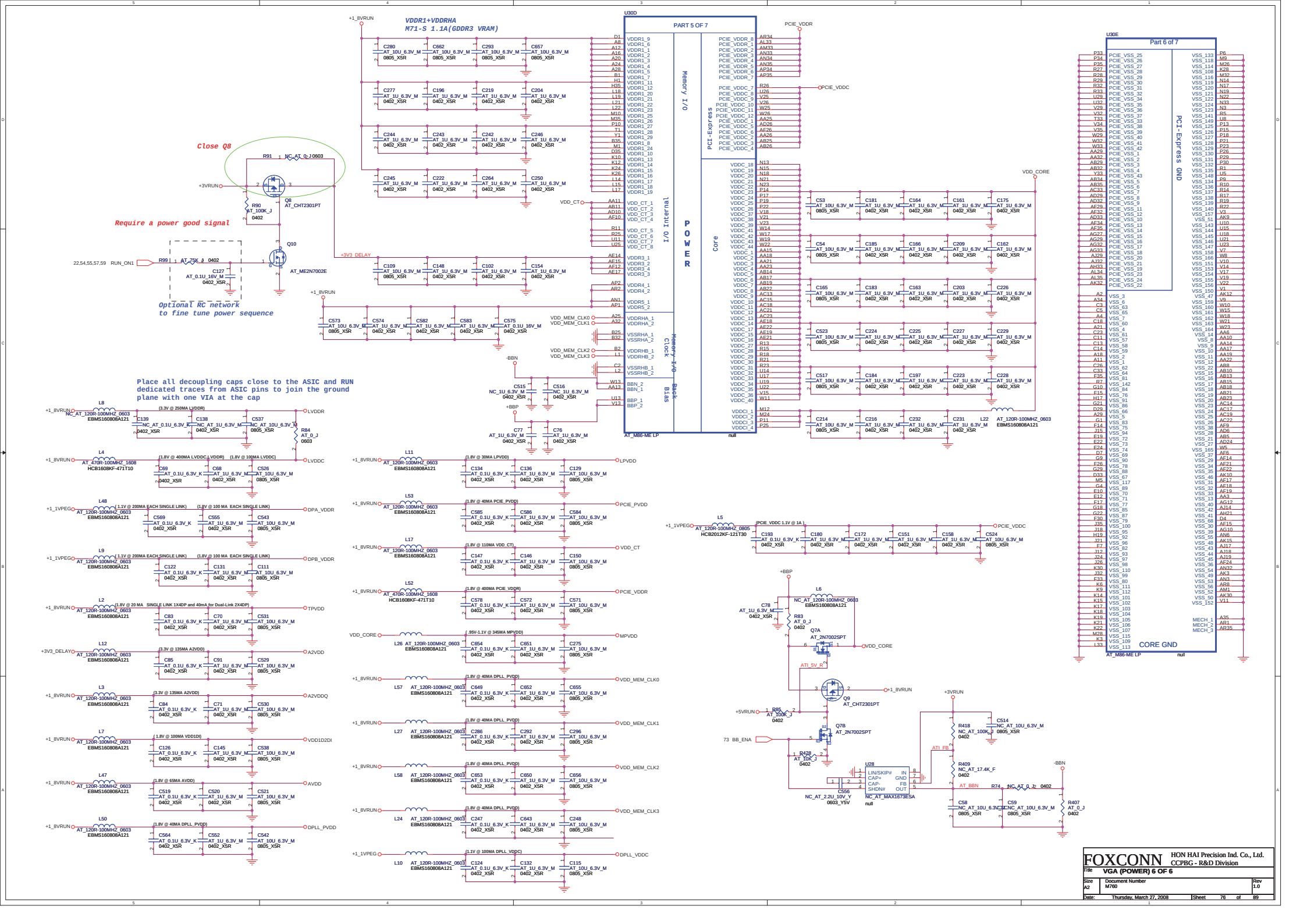

FOXCONN HON HAI Precision Ind. Co., Ltd.
CCPBG - R&D Division

Title	VGA (POWER) 6 OF 6	
Size A2	Document Number M760	Rev 1.0
Date: Thursday, March 27, 2008	Sheet 76 of 89	

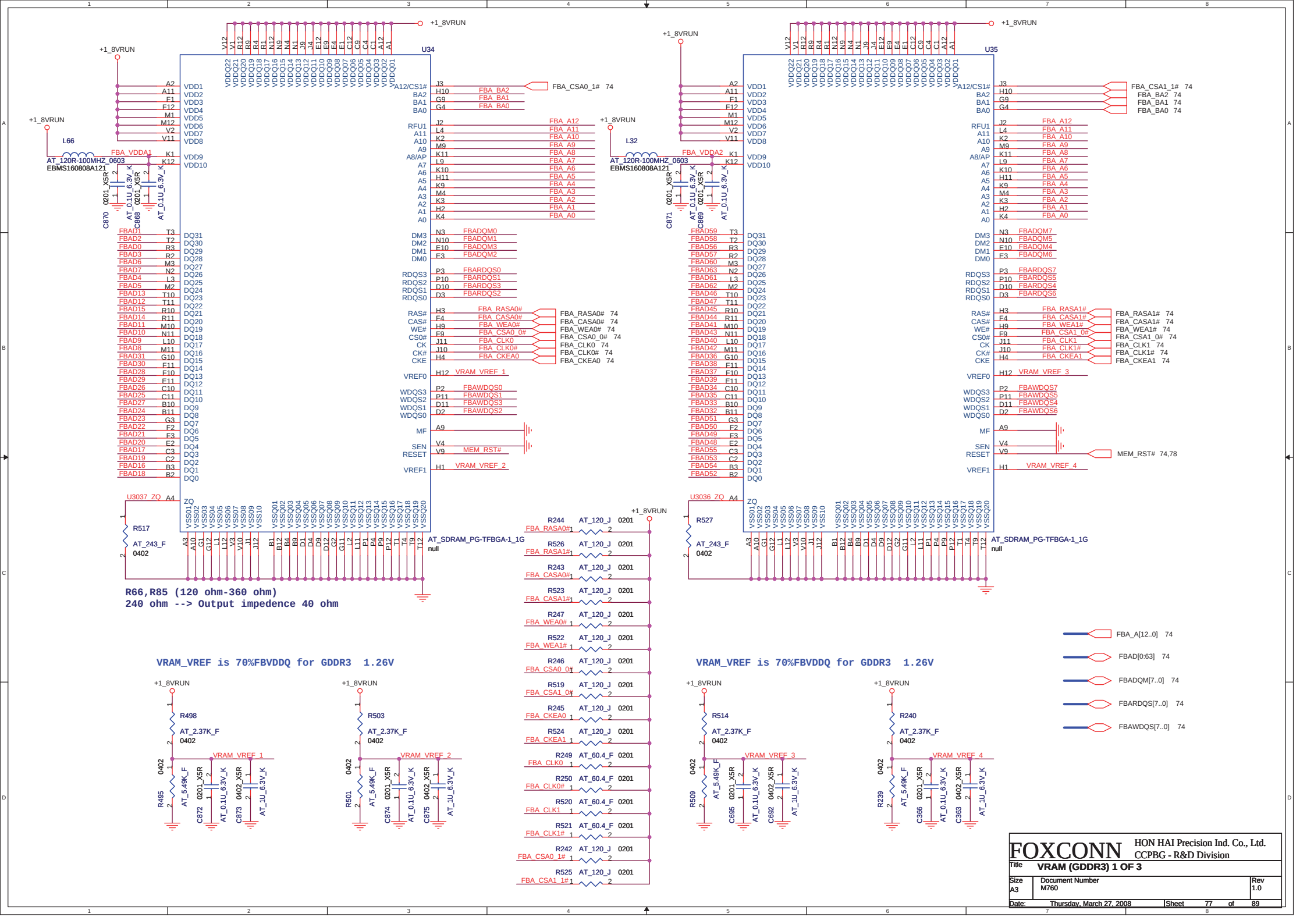
U34
U35
+1_8VRUN
L66
L32
FBA_VDDA1
FBA_VDDA2
AT_120R-100MHZ_0603
EBMS160808A121
C870
C868
C871
C869
0201_X5R
AT_0.1U_6.3V_K
U3037_ZQ
U3036_ZQ
R517
R527
AT_243_F
0402
AT_SDRAM_PG-TFBGA-1_1G
null
R66,R85 (120 ohm-360 ohm)
240 ohm --> Output impedence 40 ohm
VRAM_VREF is 70%FBVDDQ for GDDR3 1.26V
R244
R526
R243
R523
R247
R522
R246
R519
R245
R524
R249
R250
R520
R521
R242
R525
AT_120_J
AT_60.4_F
R498
R503
R514
R240
AT_2.37K_F
R495
R501
R509
R239
AT_5.49K_F
C872
C874
C695
C366
C873
C875
C692
C363
FBA_A[12..0] 74
FBAD[0:63] 74
FBADQM[7..0] 74
FBARDQS[7..0] 74
FBAWDQS[7..0] 74
FOXCONN
HON HAI Precision Ind. Co., Ltd.
CCPBG - R&D Division
Title
VRAM (GDDR3) 1 OF 3
Size
A3
Document Number
M760
Rev
1.0
Date:
Thursday, March 27, 2008
Sheet
77
of
89

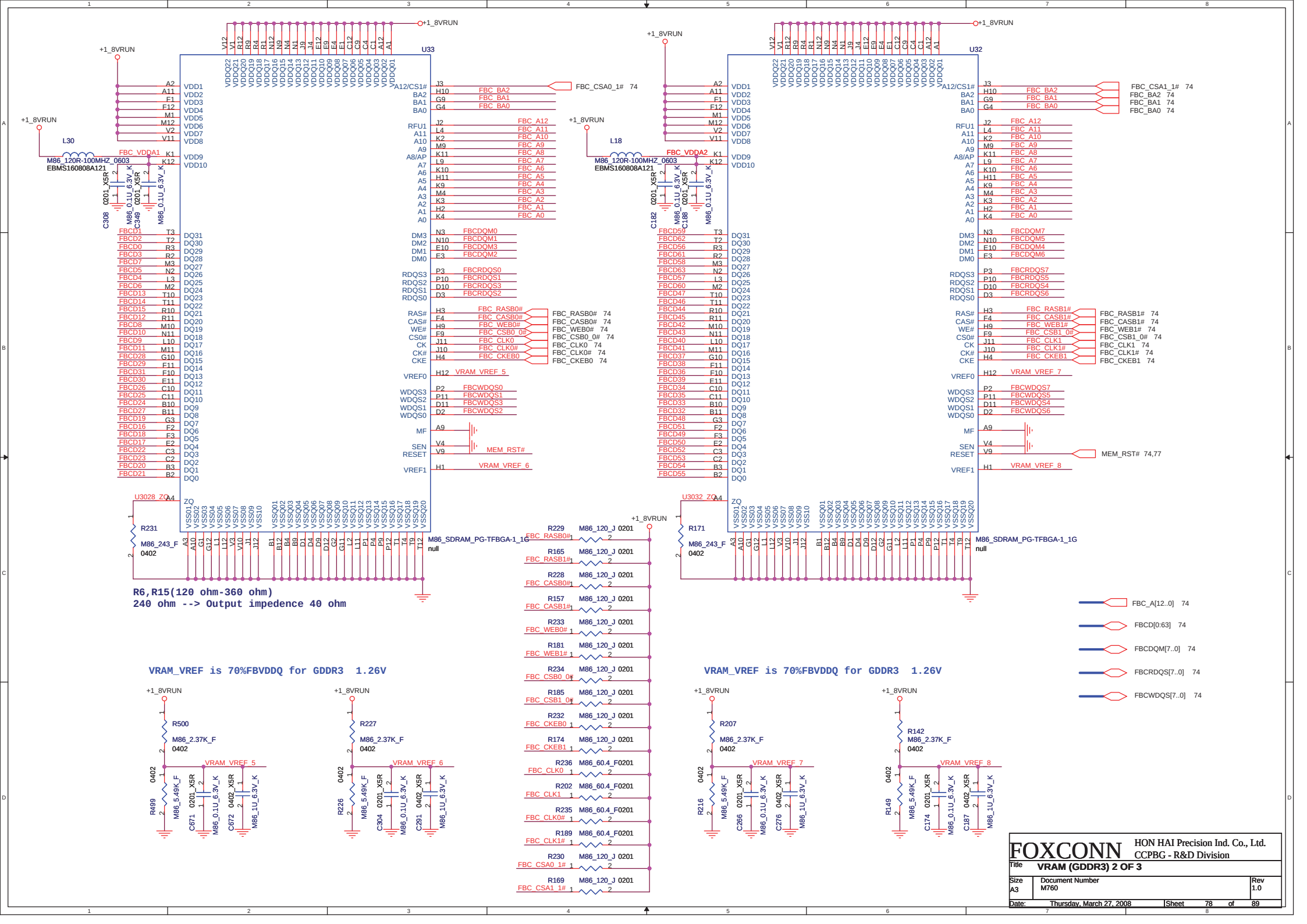
+1_8VRUN
U33
U32
L30
L18
M86_120R-100MHZ_0603
EBMS160808A121
FBC_VDDA1
FBC_VDDA2
M86_0.1U_6.3V_K
0201_X5R
M86_SDRAM_PG-TFBGA-1_1G
null
U3028_ZQ
U3032_ZQ
R231
R171
M86_243_F
0402
R6,R15(120 ohm-360 ohm)
240 ohm --> Output impedence 40 ohm
VRAM_VREF is 70%FBVDDQ for GDDR3 1.26V
R500
R227
R207
R142
M86_2.37K_F
M86_5.49K_F
VRAM_VREF_5
VRAM_VREF_6
VRAM_VREF_7
VRAM_VREF_8
MEM_RST#
FBC_A[12..0] 74
FBCD[0:63] 74
FBCDQM[7..0] 74
FBCRDQS[7..0] 74
FBCWDQS[7..0] 74
FOXCONN
HON HAI Precision Ind. Co., Ltd.
CCPBG - R&D Division
Title
VRAM (GDDR3) 2 OF 3
Size
A3
Document Number
M760
Rev
1.0
Date:
Thursday, March 27, 2008
Sheet
78
of
89

Place around the VRAM U32

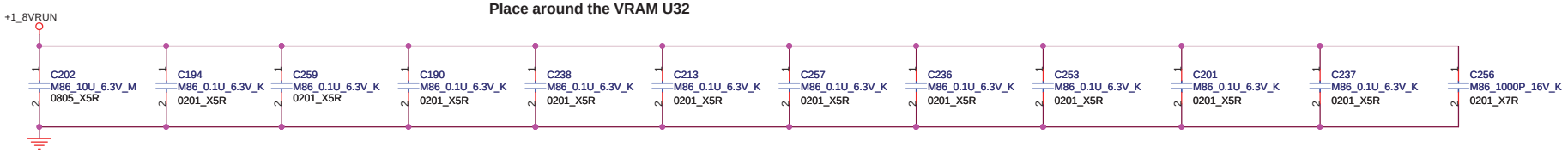

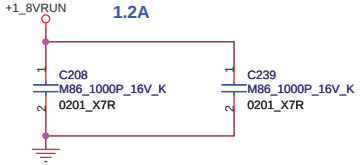

Place around the VRAM U33

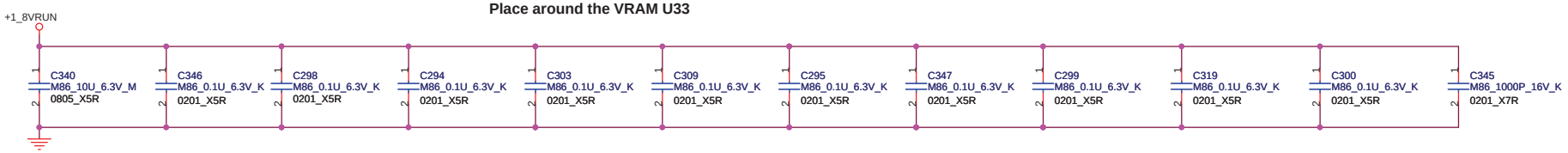

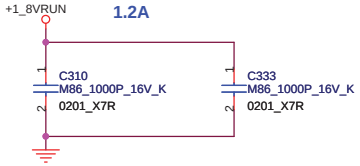

Place around the VRAM U35

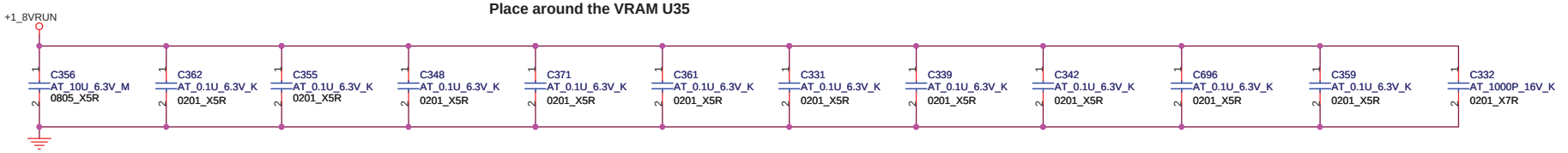

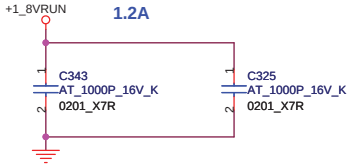

Place around the VRAM U34

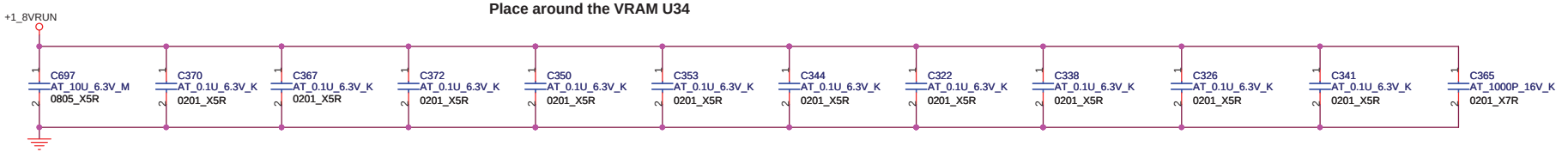

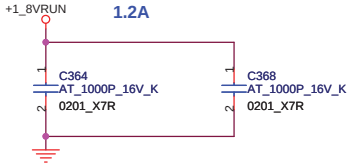

FOXCONN	HON HAI Precision Ind. Co., Ltd. CCPBG - R&D Division	
Title	VRAM (POWERBYPASS) 3 OF 3	
Size A3	Document Number M760	Rev 1.0
Date: Thursday, March 27, 2008	Sheet 79 of 89	

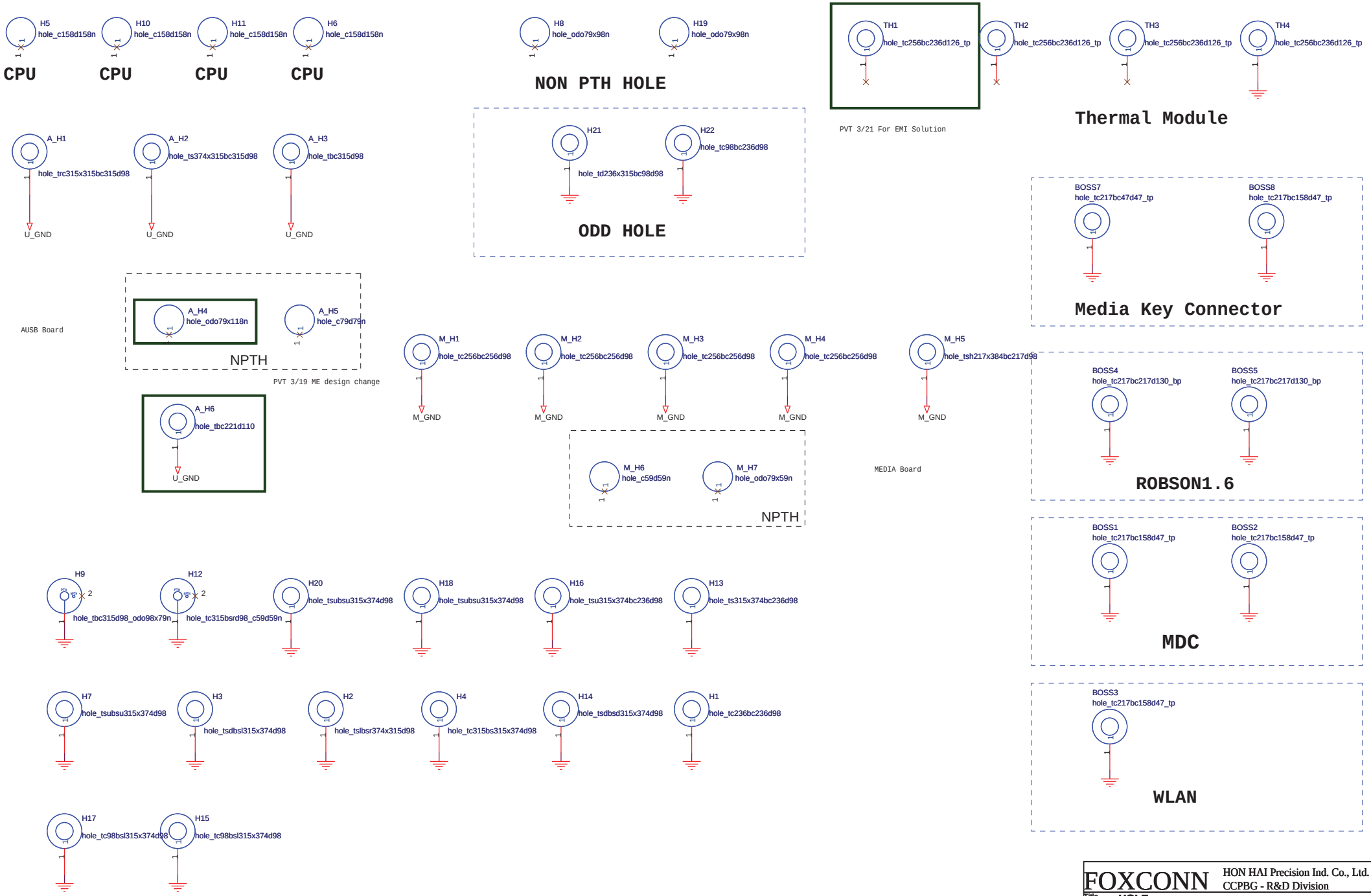

FOXCONN
HON HAI Precision Ind. Co., Ltd.
CCPBG - R&D Division

Title	HOLE	
Size A3	Document Number M760	Rev 1.0
Date: Thursday, March 27, 2008	Sheet 80 of 89	

2007/09/03
P.9:Reverse PCIE I/F
P.39:Change CN17 P/N
P.44:Add Power Button Connector
P.63:Change LVDS Connector P/N

2007/09/05
P.25:Change U14 P/N from Rohm to TI
P.25:Change R333,R335,R338 from 0603 to 0402
P.34:Add R762,R763,C840 for GBRST#

2007/09/07
P35,36 modify netname for MS/SD card
P14,15,16 swap DDR net for layout

2007/09/11
P.4:Delete R11,R14 and change to TP
P.8:Delete R74,R75 and change VGFX_VR_EN to TP
P.8:Delete R76 for double pull high
P.18:Delete R199,R201,Q3A/B
P.19:Change R217 from GPIO12 to GPIO13 (GPIO12 default=GPO,GPIO13 default=GPI)
P.20:Delete C290,C291,C292 and Add TP
P.20:Delete L16,C294,C295 and connect to +1.05V directly
P.22:Change RP25 from S3 power to S0 power
P.33:Delete G-Sensor function
P.35:Change R413-417,R419-423 from 0R to 33R
P.48:Change R442 from 1K to 68R
P.62:Delete R461 for simplify circuit
P.62:Change U29C-9 from VCC to INV_EN_EC
P.63:Delete R470,R471 for simplify circuit
P.63:Add C853,C854

2007/09/13
P.5:Add C855-C866 for reserved

2007/09/14
P.8:Delete R70 (Unuse) and add TP
P.8:Change R69,R71 from +1_05V to GND
P.9:Add R771-773 for H/L function
P.11:Delete R127
P.13:Delete all TP in this page
P.17:Delete R144-R146,R148-R160 and Add RP62-RP65
P.17:Delete R175,R,176,R178-R182,US,C242,C244 and change to TP
P.17:Delete SW1,Q1,Q2,R162,R163,R166,R167,R170
P.18:Add R774
P.19:Add R775,R776 for panel ID2,3
P.19:Delete R254,R258,C254 and add TP
P.41:Add R783,R784 for H/L sku option
P.42:Add Q41-Q43,R780-R782,CAPS_LED,NUM_LED,CTRL_LED
P.50:Add PR248 for EC Charging

2007/09/15
P.6:Add R793 for enable SRC3
P.26:Delete R346 (double pull high)
P.26:Delete R779,C337,C338 (Intel WLAN spec)
P.40:Delete R431 (double pull high)
P.66:Change U37 to ALC262D (MOR drop ALC889S)

2007/09/17
P.19:Delete TP91,TP92 and change to CH+,CH-
P.19:Add GPIO18 net:TV_REC
P.22:Delete R309,R310 and change to RUN_ON_TV1,2
P.43:Delete CIR parts and move to TV DB

2007/09/19
P.20:Add R275,R810,R811,U53 for 1.5VALW power needed
P.20:Change VCCHDA from 3V to 1.5V
P.26:Delete SW3 (Move to Media key DB)
P.44:Delete CN26 (Move to Media key DB)
P.50:Add PR254-256,261,262 for power wave adjust
P.54:Add PR253,PR259 for power wave adjust
P.59:Add PR257-258,260 for power wave adjust
P.64:Move R618 from P.73 to here (Close to connector)
P.72:Add R816,R817,R818 for disable use
P.74:Change R650 from 243R to 240R
P.77:Add R812,R813 for 32Mx32Bit RAM config
P.78:Add R814,R815 for 32Mx32Bit RAM config

2007/09/20
Page all:Modify MON_,ATI_ to CA_,AT_
P.11:Delete R116

FOXCONN HON HAI Precision Ind. Co., Ltd.
CCPBG - R&D Division

Title	**Power Design Diagram**	
Size: A3	Document Number: M760	Rev: 1.0
Date: Thursday, March 27, 2008	Sheet 81 of 89	

2007/10/23
P.32:Add PATA ODD power saving feature circuit.
P.18:Delete SATA ODD circuit at SB side.
P.33:Move the WL & BT switch and Status LED signal to MB side.
P.44:Move the Status LED to MB side.
P.26:Move the WL & BT switch to MB side.
P.32:Change ODD from SATA to PATA.

2007/10/24
P.44:Change Status LED type.
P.34:Change the MS/SD LED control signal.
P.36:Change MS/SD LED control signal share one LED.
P.35:Change the MS/SD LED control signal.
P.72:Change the strap pin stuff and NC for defaut M86.
P.06:Use SRC8 for PCIE PATA bridge clock.
P.70:Change Internal speaker connector form HS6204E to HS8204E.

2007/10/29
P.57:Change +1_8VRUN Power control signal to RUN_ON1.
P.51:Change discharge signal to RUN_ON1#
P.73:10/29 Change pull high power to +1_8VRUN for VGA Vref
correction.
P.87:Reverse the Function switch connector for EVT1 mistake.

2007/10/30
P.45:Add 22 ohm resistor for countermeasure of possiblepower line
short.
P.45:Change PL4 for the Power team test result of EVT1.
P.20:change C420 to 0.47uF for customer schematic review.

P.50:Change Battery charging set table.
P.53:Change PR200 to 0 ohm for the PWM frequency change to
400KHz/500KHz
P.59:Reserve PR209 for VGA_EN/PSV pull low.

2007/10/31
P.25:Change Express card CN10 and CN11 conntor to correct part.
P.56:Change WL conntor CN12 and CN13 to correct part.

2007/11
P.64: Change the net connection of RP46 and RP53 for EVT1 net
mistake
P.75:Change the LVDS change net connection for EVT1 net mistake.
P.23:Co-lay R775 with U3,Default is NC.
P.22,35,17:Adjust for clock accuracy.
P.17:Stuff for HDCP function.
P.58:Adjust charger voltage to 12.48V
P.64:Change Q35 value to CA_
P.67:Change Q20 to 2N7002E For solve the EVT1 hang "11" issue.
P.09:Reserve 100 ohm termination resistor at P/N signal, modify
layout to shorten the trace stub.
P.27:Update Robson connector type.
P.22:Connect U4 Pin 80 for ODD power saving feature control.
P.59:Change PC158 to 100pF for power team request.
P.18:Intel recommend to add RC delay for SRTCRST# timing.
P.87:Move 150 ohm resistor to power switch cable board.
P.44:Modify schematic for ODD/HDD share the LED.

FOXCONN
HON HAI Precision Ind. Co., Ltd.
CCPBG - R&D Division

Title: Power Design Diagram		
Size: A2	Document Number: M760	Rev: 1.0
Date: Thursday, March 27, 2008	Sheet 82 of 89	

1/21~1/31
1.P06 - Clk gen - B version ,SL28648BLC
2.P06 - Clk gen - CLK_PCIE_WLAN2#/CLK_PCIE_WLAN2 pin swap
3.P03 - CPU - R26 change to 649ohm
4.P25 - Expresscard - Change path to EXPRESS_CLK_EN#
5.P64 - HMDI - Change D11 to BAS316 for low equal cap value
6.P87 - Ext MIC Jack - Change A_C35, A_C36 to 0402
7.P20 - ICH9(POWER) - Change c415/1UF/X5R
8.P11 - Cantiga(power,vcc) - Connect to Vcc3_3 no filter CA_0ohm (R822) NC C621 and C622
9.P19 - ICH9(GPIO) - Add R823 , If G3 -> S5 WOL is not supported, GPIO9/WOL_EN can be connected to ground
10.P58 - OVP Protection - Power Limit Protect Setting 90W for AT - Stuff PR24 / PR22 ,75W for CA - Stuff PR218 / PR219
11.P58 - OVP Protection - Power Limit Protect Setting Bom change to +5VALW_LDO
12.P19 - ICH9-M(GPIO) CRT ID - 111 , 15.4" LCD change to 000
13.P50 - DCIN/ Charger - Total Power Setting PR12 AT_22K fot 90W,PR220 CA_44.2K for 75W
14.P26/P40 - BT - CN22 Pin6 as BT_LED MNI PCIE LAN - Q5 pin1 change to BT_LED and add pull low R824
15.P66 - HP Jack - Revised the net name to HP_R_1/HP_L_1
16.P69 - Audio Amp - Add R825 for reserved
17.P28 - TV tuner - Reserved the CAP17 for TV Power
18.P26 - Mini PCIE WLAN - Reserved the CAP16 for WLAN Power
19.P22 - ECWPC775 - Add the diode D21/D22 to prevent the leakage
20.P69 - Audio Amp - U19 Change to G1431F2U,TSSOP-20(FD),2W Stereo Audio Amplifier
21.P54 - Sys power +1_05V PJ1 Delete
22.P17 - ICH9M - U14 BOM Changed from W25X80VSSIG to W25X80AVSSIG
23.P23 - ICH9M - U23 BOM Changed from W25X16VSSIG to W25X16AVSSIG
24.P80 - Hole - Confirm ME, Delete H23
25.P25 - Expresscard - Revised CN10 Symbol footprint
26.P48 - Thermal Sensor - Reserved the EMC1402 workaround - OVT_EC# for Output Glitch on THERM# Pin During Power Up. (Vendor Suggestion)
27.P42 - Keyboard Connector- LED Display Brightness change R367,R368,R369 - 150ohm to 75ohm
28.P44 - Status LED - Change vendor of LED2 and LED3
29.P70 - Audio SPK Connector - Revised cable short schematic -Dummy Q53/Q54/R707/R708
30.P69 - Audio Amp - U19 pin10 change to 2.2uF for C468/C902/C903/C904
31.P88 - Function SW - M_C1~M_C9 change to 100pF
32.P64 - HMDI - Add MOS switch path and H/L bridge
33.P19 - ICH9M - Add Panel ID Jumpers R828/R829/R830
34.P26 - BT - Comment change BT_ON:Active S0 ,S3
35.P58 - OVP - PJ15 change to PR10.2 as MOR request

FOXCONN HON HAI Precision Ind. Co., Ltd.
CCPBG - R&D Division

Title: Power Design Diagram		
Size: A2	Document Number: M760	Rev: 1.0
Date: Thursday, March 27, 2008	Sheet 83 of 89	

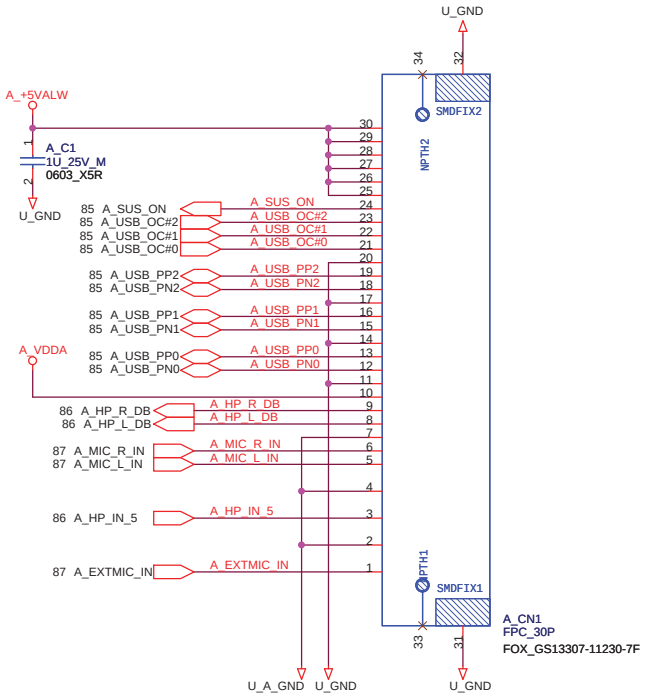

FOXCONN	HON HAI Precision Ind. Co., Ltd. CCPBG - R&D Division	
Title	B2B Conn	
Size A3	Document Number M760 AUSB DB (CNX-409)	Rev 1.0
Date: Thursday, March 27, 2008	Sheet 84 of 89	

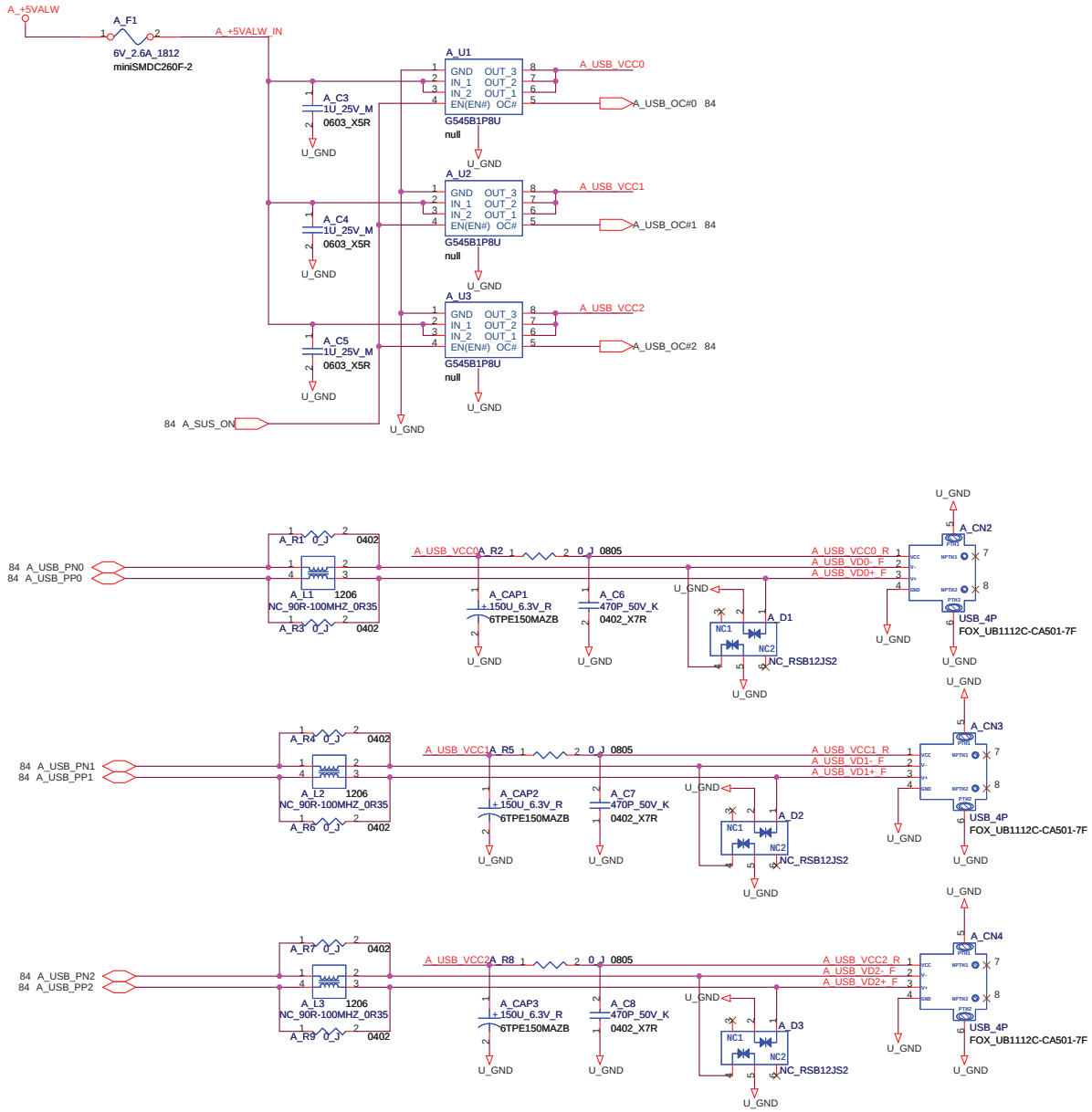

FOXCONN
HON HAI Precision Ind. Co., Ltd.
CCPBG - R&D Division

Title: USB Port		
Size: Custom	Document Number: M760 AUSB DB (CNX-409)	Rev: 1.0
Date: Thursday, March 27, 2008	Sheet 85 of 89	

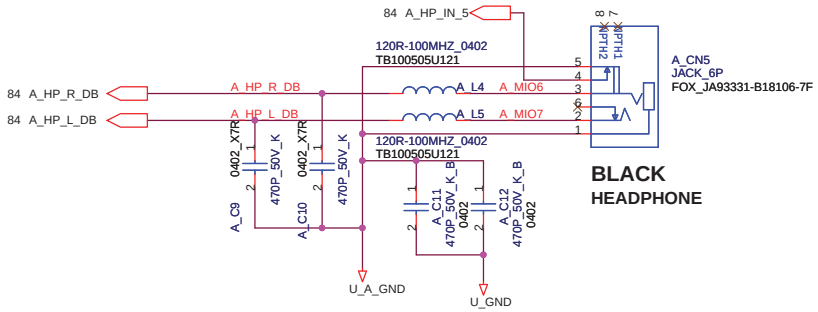

FOXCONN	HON HAI PRECISION IND. CO., LTD. CPBG - R&D Division	
Title: Head Phone Jack		
Size: A3	Document Number: M760 AUSB DB (CNX-409)	Rev: 1.0
Date: Thursday, March 27, 2008	Sheet 86 of 89	

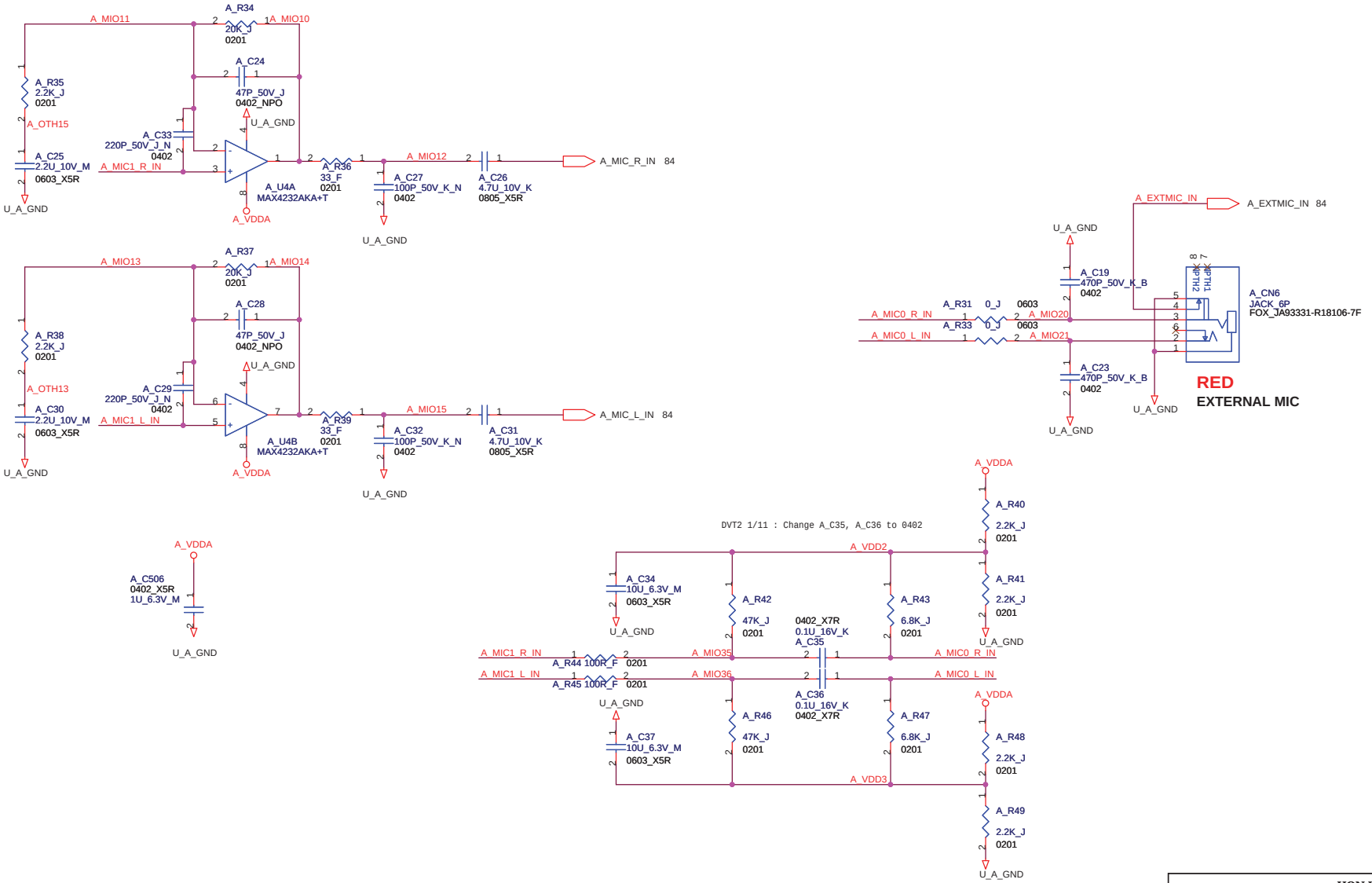

FOXCONN	HON HAI Precision Ind. Co., Ltd. CCPBG - R&D Division
Title	Ext MIC Jack
Size: A3	Document Number: M760 AUSB DB (CNX-409)
Rev	1.0
Date: Thursday, March 27, 2008	Sheet 87 of 89

S1 (Short Cut)

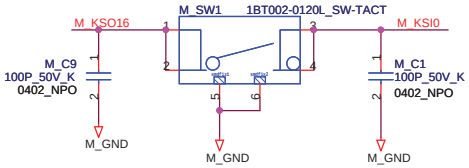

VOL-

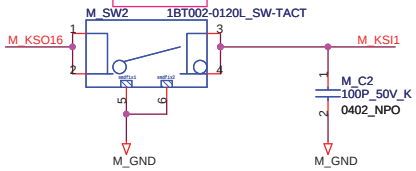

VOL+

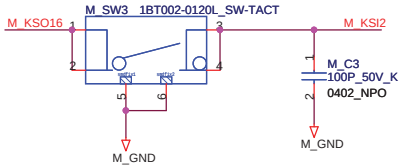

STOP

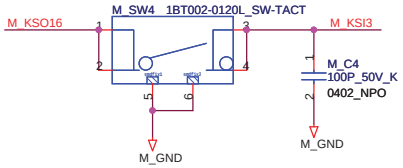

PLAY/PAUSE

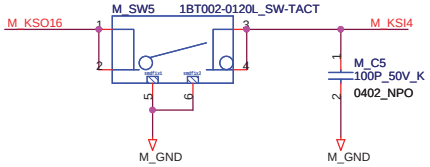

FR

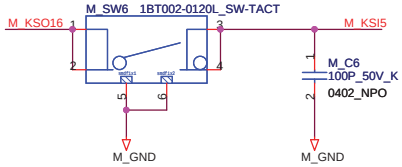

FF

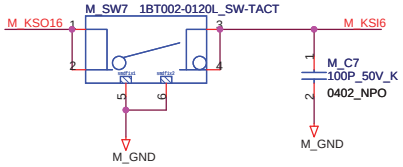

AV MODE

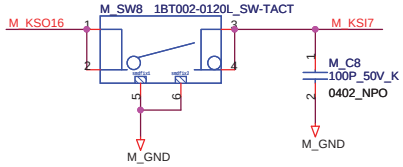

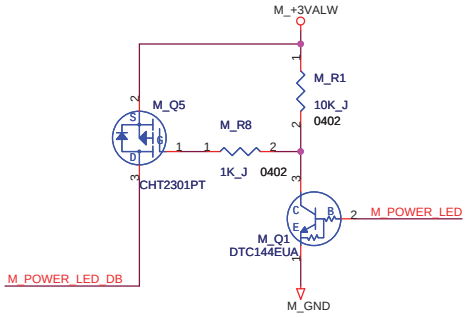

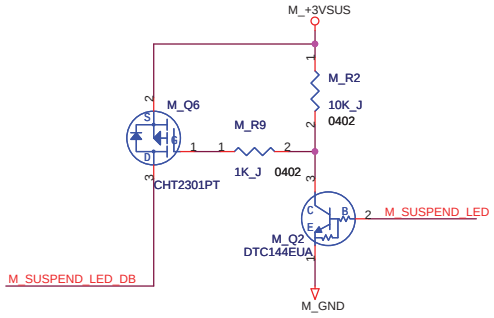

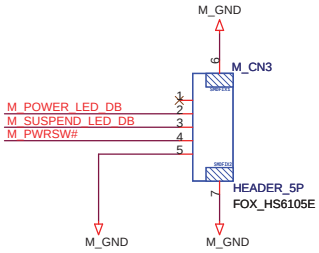

Power Button Connector

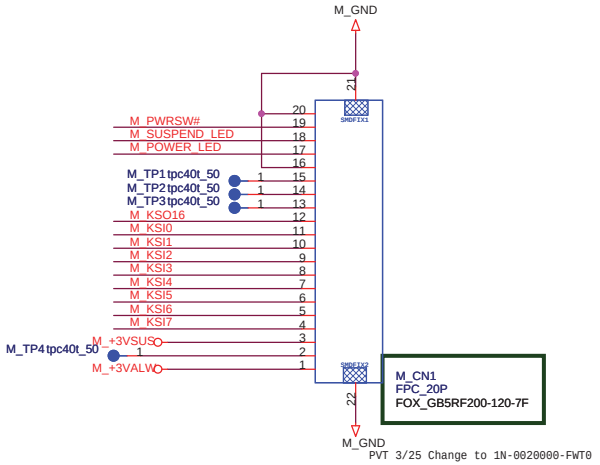

PVT 3/25 Change to 1N-0020000-FWT0

Media Key Connector

FOXCONN	HON HAI Precision Ind. Co., Ltd. CCPBG - R&D Division	
Title: Function SW		
Size: A3	Document Number: M760 MEDIA DB (SWX-287)	Rev: 1.0
Date: Thursday, March 27, 2008	Sheet 88 of 89	

3/13~3/15
-P52. PU5 change part number to 15-R5G0500-0000
-P64. Stuff R505 for U37 HDMI_DCC_EN enable
-P20. C380 and C378 change to 1C-2B20104-M000
-P64. Delete Q35 and R152 ,R531 of L SKU
-P64. Stuff R507 ,R508 R568 and R569
-P59. Add PR221 for M82 PowerPlay Control
-P59. Change PR179 from 16.9K to 19.6Kohm
-P66. P64. Q34 and Q40 change to EVT2 solution
-P50. PC4 change net to BT+_L for EMI request
-P50. Add C906 and C907 for EMI request
-P50. Change PR4 to 1R-200015T-FJ00
-P50. Add PR222 and PR223 for Power Team Solution
-P32. Change ODD_DP# pin to pin23
-P20. For Engery Star Dummy U15 and R315,R314 and Stuff U47 ,C900 and C901
-P72. Change VRAM Strap pin to Q256M 32x32
-P70. Add R832/R833 for MOR request -cable short function
-P64. Add Q57 and Q58 for HDMI 5V Votage Drop Solution and Dummy D18
-P43. Add R834 +5VRUN_ODD Path 0ohm

Title: PVT History		
Size: A	Document Number: **M760**	Rev: 1.0
Date: Thursday, March 27, 2008	Sheet 89 of 89	

www.s-manuals.com