Schematics Page Index (Title / Revision / Change Date)

Page	Title of Schematics Page	Rev.	Date	Page	Title of Schematics Page	Rev.	Date
01	Index page	1.1	09'04'13	36	PCI (PCI BUS)	1.1	09'04'13
02	Block Diagram	1.1	09'04'13	37	PCI (i.LINK/SD/MS-DUO)	1.1	09'04'13
03	Penryn(HOST BUS) 1/3	1.1	09'04'13	38	CAMERA/Int MIC.	1.1	09'04'13
04	Penryn(HOST BUS) 2/3	1.1	09'04'13	39	Felica & Modem	1.1	09'04'13
05	Penryn (Power/Gnd) 3/3	1.1	09'04'13	40	USB2.0	1.1	09'04'13
06	CLOCK GEN	1.1	09'04'13	41	Bluetooth	1.1	09'04'13
07	Cantiga (HOST) 1/7	1.1	09'04'13	42	LED & T/P & LID	1.1	09'04'13
08	Cantiga (DMI) 2/7	1.1	09'04'13	43	Power Board MB CONN	1.1	09'04'13
09	Cantiga (GRAPHIC) 3/7	1.1	09'04'13	44	HOLE	1.1	09'04'13
10	Cantiga (DDRII) 4/7	1.1	09'04'13	45	Power Design Diagram	1.1	09'04'13
11	Cantiga (POWER,VCC) 5/7	1.1	09'04'13	46	DCIN&Charger	1.1	09'04'13
12	Cantiga (VCC CORE) 6/7	1.1	09'04'13	47	SYS Power (+3_3V/+5V)	1.1	09'04'13
13	Cantiga (VSS) 7/7	1.1	09'04'13	48	SYS Power(+1_5V/+1_05V)	1.1	09'04'13
14	DDRII(SO-DIMM_0) 1/2	1.1	09'04'13	49	DDR2 Power(+1_8V/+0_9V)	1.1	09'04'13
15	DDRII(SO-DIMM_1) 2/2	1.1	09'04'13	50	CPU_Vcore---ISL6262A	1.1	09'04'13
16	CRT	1.1	09'04'13	51	Others power plane	1.1	09'04'13
17	LVDS	1.1	09'04'13	52	OVP protection	1.1	09'04'13
18	HDMI	1.1	09'04'13	53	Audio+USB DB CONN	1.1	09'04'13
19	ICH9-M(PCI/USB) 1/5	1.1	09'04'13	54	Audio (HP, MIC Jack)	1.1	09'04'13
20	ICH9-M(LPC,IDE,SATA)2/5	1.1	09'04'13	55	Power Board DB & CONN	1.1	09'04'13
21	ICH9-M(GPIO) 3/5	1.1	09'04'13	56	USB DB	1.1	09'04'13
22	ICH9-M(POWER) 4/5	1.1	09'04'13	57	History (1)	1.1	09'04'13
23	ICH9-M(GND) 5/5	1.1	09'04'13	58	History (2)	1.1	09'04'13
24	SATA HDD/CD-ROM	1.1	09'04'13	59	History (3)	1.1	09'04'13
25	EC+KBC(WPCE775L)	1.1	09'04'13	60	History (4)	1.1	09'04'13
26	Flash ROM/SPI	1.1	09'04'13	61			
27	Half Mini Card	1.1	09'04'13	62			
28	EXPRESS CARD	1.1	09'04'13	63			
29	Marvell GLAN(88E8057)	1.1	09'04'13	64			
30	Audio (CODEC & POWER)	1.1	09'04'13	65			
31	Audio (HP)	1.1	09'04'13	66			
32	Audio (SPKR)	1.1	09'04'13	67			
33	Audio (MUTE)	1.1	09'04'13	68			
34	Audio+USB MB CONN	1.1	09'04'13	69			
35	FAN/Thermal	1.1	09'04'13	70			

Project Code & Schematics Subject: **M850 Main Board_6L**

PCB P/N:	**1P-0094J00-6011(IRIS)** **1P-0094500-6011(HANNSTAR)**
A+U/B P/N:	**1P-1094J01-6011(IRIS)** **1P-1094501-6011(HANNSTAR)**
P/B P/N:	**1P-1094J00-6011(IRIS)** **1P-1094500-6011(HANNSTAR)**

P. Leader	Check by	Design by

FOXCONN
HON HAI Precision Ind. Co., Ltd.
CCPBG - R&D Division

Title: **Index Page**

Size: Custom | Document Number: M850-1-02 | Rev: 1.1

Date: Friday, April 17, 2009 | Sheet 1 of 60

EC+KBC(WPC8763L)

M850(Montevina)

CA_	Internal Graphic
HD_	HDMI Function

TI CHARGER BQ24751 P.46

INPUTS	OUTPUTS
DC_IN	BT+ DCBATOUT

SYSTEM DC/DC TPS51125RGER P.47

INPUTS	OUTPUTS
DCBATOUT	+5VALW +5VALW_LDO +3VALW +ECVCC +15V_ALW

SYSTEM DC/DC SC411 P.48

INPUTS	OUTPUTS
DCBATOUT	+1_5VRUN +1_05VM

SYSTEM DC/DC TPS51116RGER P.49

INPUTS	OUTPUTS
DCBATOUT	+1_8VSUS +0_9VSUS

CPU DC/DC ISL6262A P.50

INPUTS	OUTPUTS
DCBATOUT	VHCORE

CPU
Penryn / Celeron / Merom Processor
Micro-FCPGA-478
(478 -pin socket P)
P3 ~ 5

CK505 SL28541BQC P6 — X,TAL 14.318MHZ

FSB
667/800/1066 MHZ

North Bridge Cantiga GM/GL
FCBGA-1329
P7 ~ 13

HDMI P18 — PS8101 QFN48G P18 — HDMI

LVDS WXGA P17 — LVDS

RGB P16 — RGB

800 MHZ — SO-DIMM 0 800 MHZ DDR(II) 200 pin P14

800 MHZ — SO-DIMM 1 800 MHZ DDR(II) 200 pin P15

X4 DMI
(Direct Media Interface)

RJ11 — MDC 1.5 Modem P39

Int. Speaker 1.0 Watt x 2 — GMTG1341 Amplifier

Ext. Mic In Jack — Pre-AMP

Headphone Jack

Int. Mic P38

Realtek ALC262 P30 ~ 34 — HDA

33MHZ PCI BUS

PCIE 1

South Bridge ICH9-M (USB x 11) (PCIE x 6) (SATA x 2)
676 mBGA
P19 ~ 23

2 PCIE

7 USB2.0

2 SATA 1.5Gb/s

LPC

MS Pro/DUO SD Card P37 — RICOH R5C833 CardReader i.LINK P36 ~ 37

i.LINK P36

RJ45 — DELTA LFE9249-R P29 — Marvell 88E8057 P29

Winbond WPCE775L
LQFP-128
P25

PS2
PWM/TACH
GPIO
SPI
35001 Bus
SMBus 1

Touchpad P42 — FAN P35 — Lid Switch P42 — Flash BIOS 16M bit P26 — BATT ID P46

BATT CONN P46

Thermal Sensor EMC1402-2-ACZL (CPU/GMCH) MSOP-8 P35

Thermal Sensor G781P8f (DIMM) MSOP-8 P35

Keyboard P25

SATA HDD P23

SATA ODD P23

USB 2.0 CONN.X2 P40

Express Card 34 P28

HMC P27

Bluetooth P41

Felica P39

CAMERA P38

USB 2.0 CONN.X2 P56

Button P55

Daughter Board

FOXCONN — HON HAI Precision Ind. Co., Ltd.
CCPBG - R&D Division

Title: Block Diagram

Size	Document Number	Rev
Custom	M850-1-02	1.1

Date: Friday, April 17, 2009 — Sheet 2 of 60

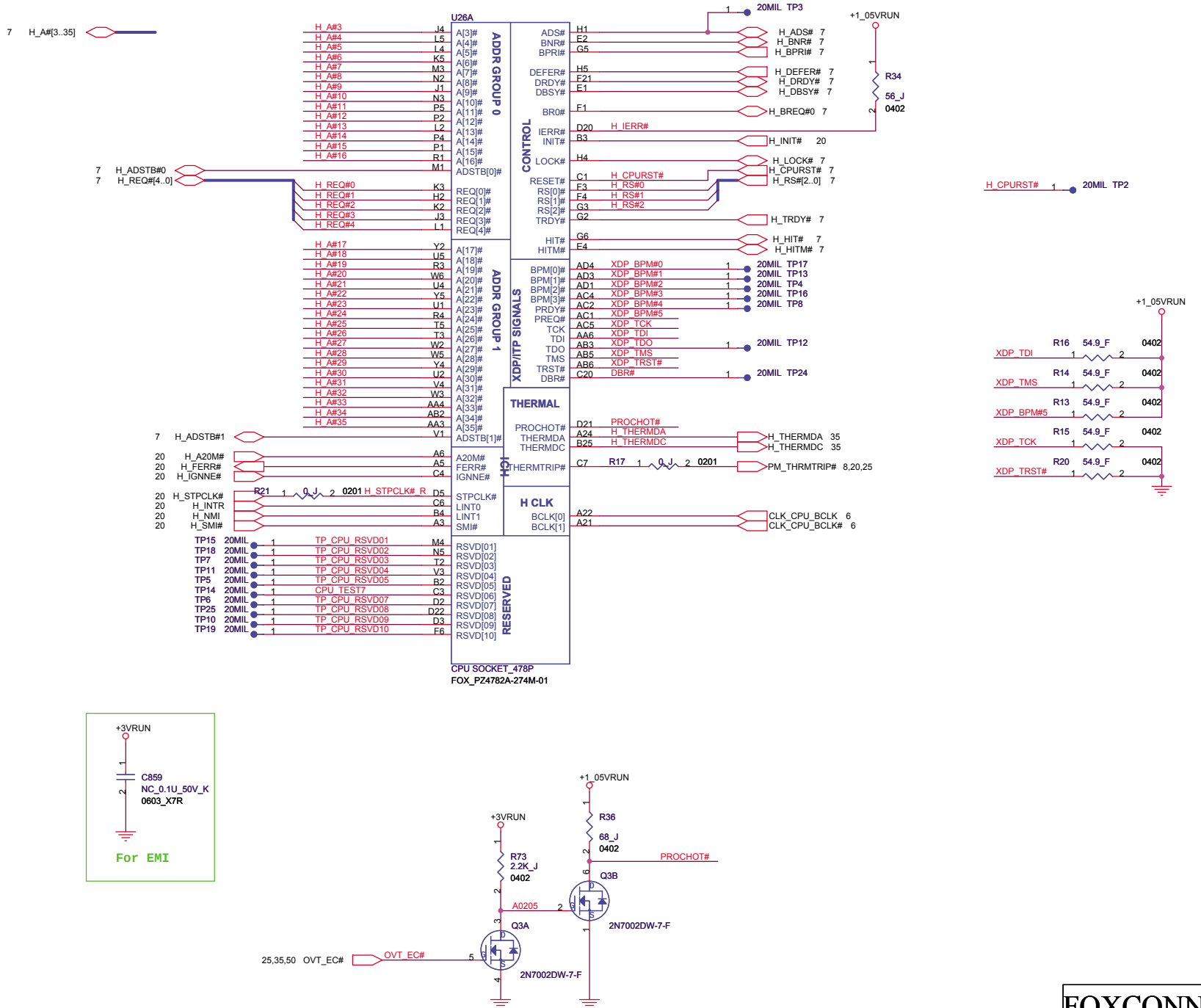

FOXCONN	HON HAI Precision Ind. Co., Ltd. CCPBG - R&D Division	
Title	Penryn (HOST BUS) 1/3	
Size A3	Document Number M850-1-02	Rev 1.1
Date: Friday, April 17, 2009	Sheet 3 of 60	

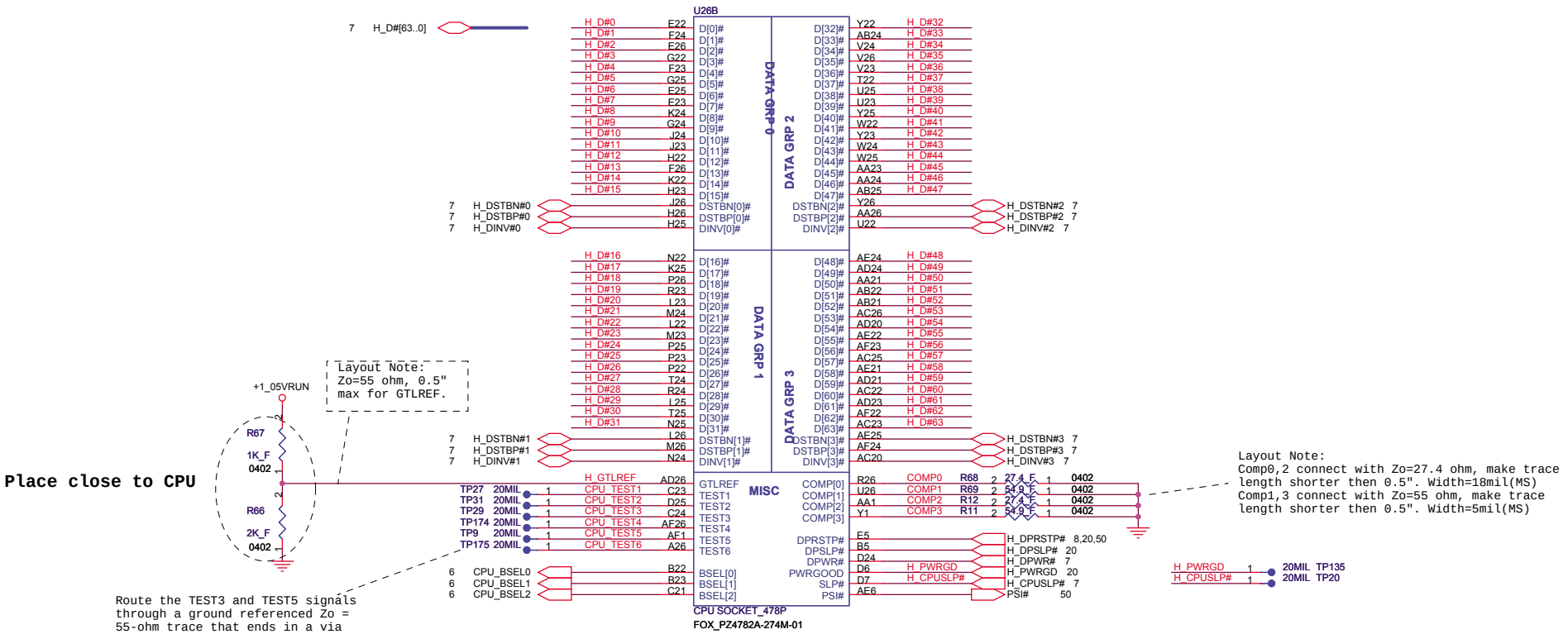

FOXCONN	HON HAI Precision Ind. Co., Ltd. CCPBG - R&D Division	
Title	Penryn (HOST BUS) 2/3	
Size A3	Document Number M850-1-02	Rev 1.1
Date: Friday, April 17, 2009	Sheet 4 of 60	

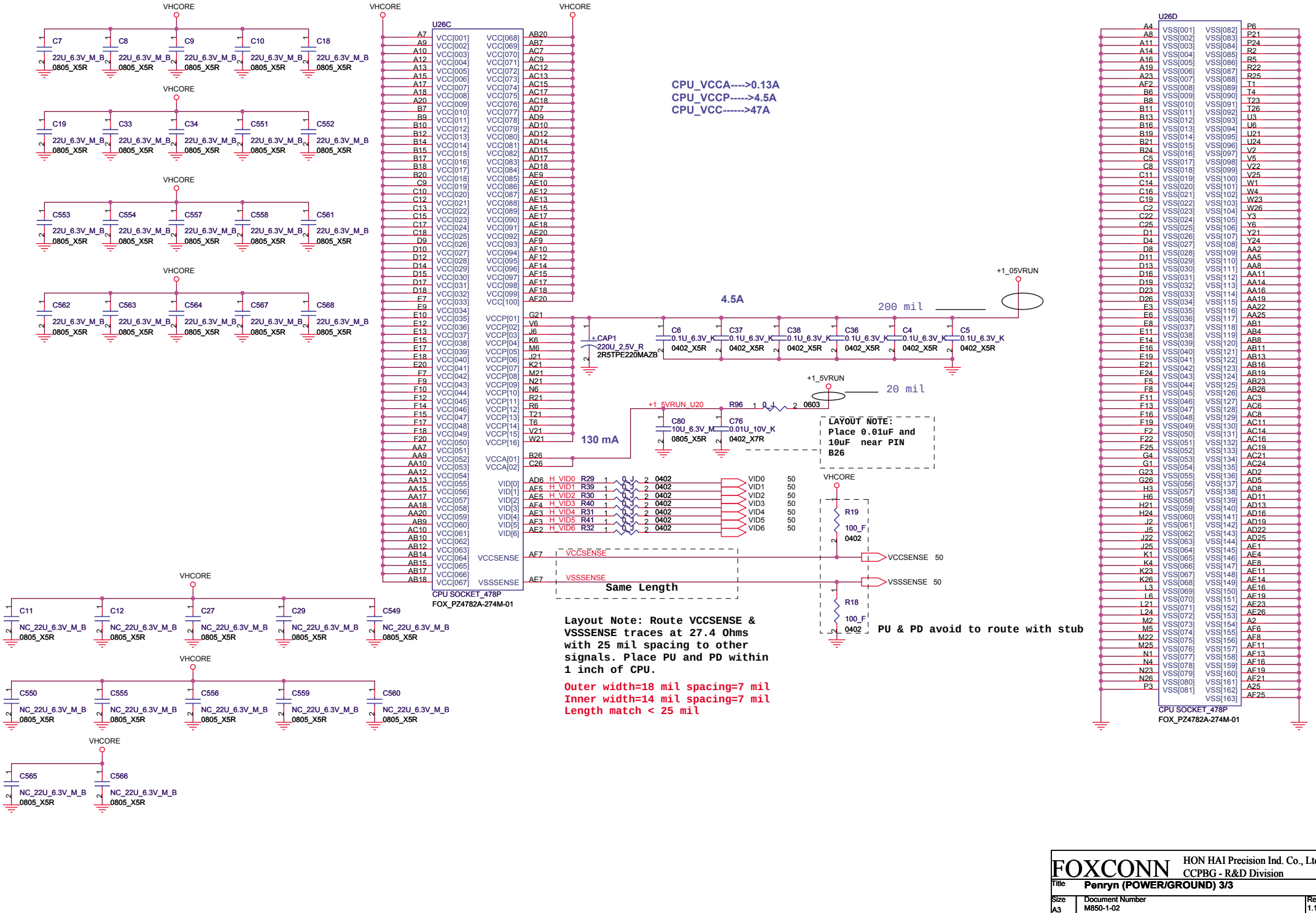

FOXCONN	HON HAI Precision Ind. Co., Ltd. CCPBG - R&D Division	
Title	Penryn (POWER/GROUND) 3/3	
Size A3	Document Number M850-1-02	Rev 1.1
Date: Friday, April 17, 2009	Sheet 5 of 60	

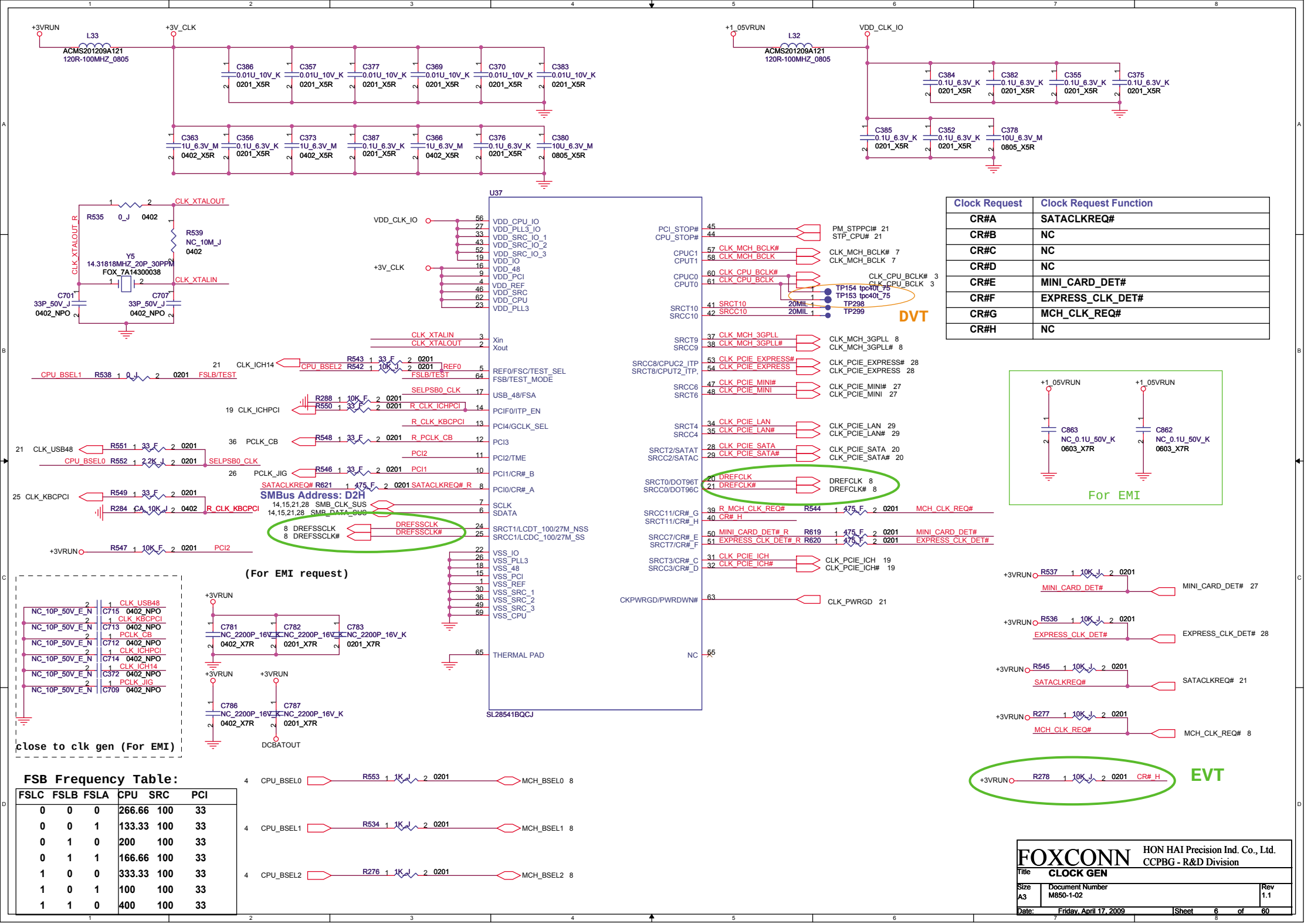

Clock Request	Clock Request Function
CR#A	SATACLKREQ#
CR#B	NC
CR#C	NC
CR#D	NC
CR#E	MINI_CARD_DET#
CR#F	EXPRESS_CLK_DET#
CR#G	MCH_CLK_REQ#
CR#H	NC

FSB Frequency Table:

FSLC	FSLB	FSLA	CPU	SRC	PCI
0	0	0	266.66	100	33
0	0	1	133.33	100	33
0	1	0	200	100	33
0	1	1	166.66	100	33
1	0	0	333.33	100	33
1	0	1	100	100	33
1	1	0	400	100	33

FOXCONN
HON HAI Precision Ind. Co., Ltd.
CCPBG - R&D Division

Title: CLOCK GEN		
Size: A3	Document Number: M850-1-02	Rev: 1.1
Date: Friday, April 17, 2009	Sheet 6 of 60	

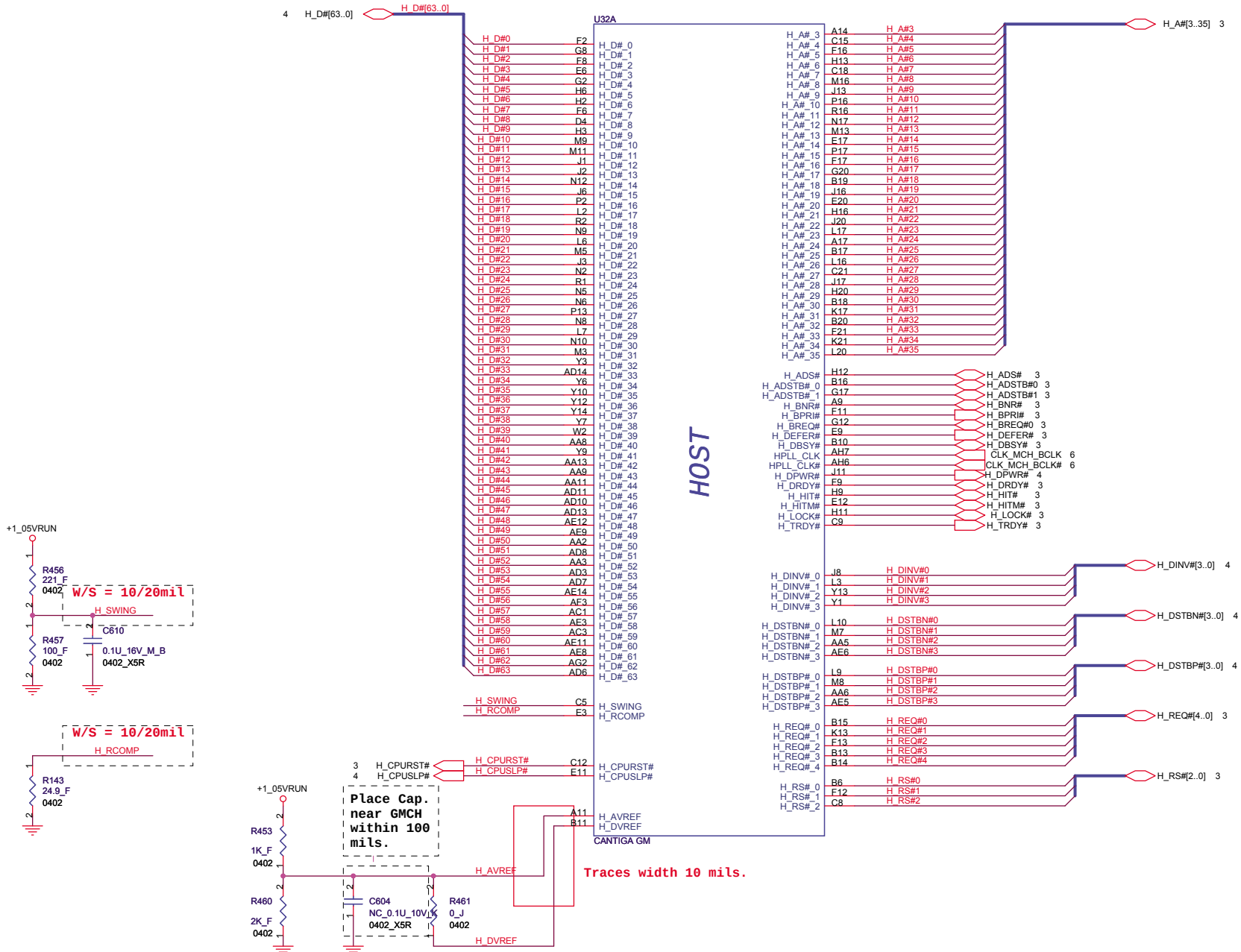
4 H_D#[63..0]
H_D#[63..0]
U32A
HOST
CANTIGA GM
H_A#[3..35] 3
H_DINV#[3..0] 4
H_DSTBN#[3..0] 4
H_DSTBP#[3..0] 4
H_REQ#[4..0] 3
H_RS#[2..0] 3
H_ADS# 3
H_ADSTB#0 3
H_ADSTB#1 3
H_BNR# 3
H_BPRI# 3
H_BREQ#0 3
H_DEFER# 3
H_DBSY# 3
CLK_MCH_BCLK 6
CLK_MCH_BCLK# 6
H_DPWR# 4
H_DRDY# 3
H_HIT# 3
H_HITM# 3
H_LOCK# 3
H_TRDY# 3
+1_05VRUN
R456 221_F 0402
W/S = 10/20mil
H_SWING
C610 0.1U_16V_M_B 0402_X5R
R457 100_F 0402
W/S = 10/20mil
H_RCOMP
R143 24.9_F 0402
3 H_CPURST#
4 H_CPUSLP#
+1_05VRUN
Place Cap. near GMCH within 100 mils.
R453 1K_F 0402
R460 2K_F 0402
C604 NC_0.1U_10V_X 0402_X5R
R461 0_J 0402
H_AVREF
H_DVREF
Traces width 10 mils.
FOXCONN
HON HAI Precision Ind. Co., Ltd.
CCPBG - R&D Division
Title Cantiga (HOST) 1/7
Size A3
Document Number M850-1-02
Rev 1.1
Date: Friday, April 17, 2009
Sheet 7 of 60

MCH_CFG_0~2 FSB Frequency	000 = FSB1066 ; 010 = FSB800; 011 = FSB667 ; Others = Reserved
MCH_CFG_3~4	Reserved
MCH_CFG_5 DMI X2 Select	Low = DMI X2 High = DMI X4 (Default)
MCH_CFG_6 ITPM Host Interface	Low =The ITPM Host Interface is enabled2 High = The ITPM Host Interface is disabled (default)
MCH_CFG_7 Intel Management Engine Crypto Strap	Low = Intel Management Engine Crypto Transport Layer Security (TLS) cipher suite with no confidentiality High = Intel Management Engine Crypto TLS cipher suite with confidentiality (default)
MCH_CFG_8	Reserved
MCH_CFG_9 PCIE Graphics Lane	Low = Reverse Lane High = Normal operation (default)
MCH_CFG_10 PCIE Loopback enable	Low = Enabled3 High = Disabled (default)
MCH_CFG_11	Reserved
MCH_CFG_12 ALLZ	Low = ALLZ mode enabled3 High = Disabled (default)
MCH_CFG_13 XOR	Low = XOR mode enabled3 High = Disabled (default)
MCH_CFG_14~15	Reserved
MCH_CFG_16 FSB Dynamic ODT	Low = Dynamic ODT disabled High = Dynamic ODT enabled (default)
MCH_CFG_17~18	Reserved
MCH_CFG_19 DMI Lane Reversal	Low = Normal operation (Default): Lane Numbered in Order High = Reverse Lanes DMI x4 mode [(G)MCH->ICH]: (3->0, 2-> 1, 1->2 and 0->3) DMI x2 mode [(G)MCH ->ICH]: (3->0, 2->1)
MCH_CFG_20 Digital Display Port (SDVO/ DP/iHDMI) Concurrent with PCIe	Low = Only digital display port (SDVO/DP/iHDMI) or PCIe is operational (default) High = Digital display port (SDVO/DP/iHDMI) and PCIe are operating simultaneously via the PEG port

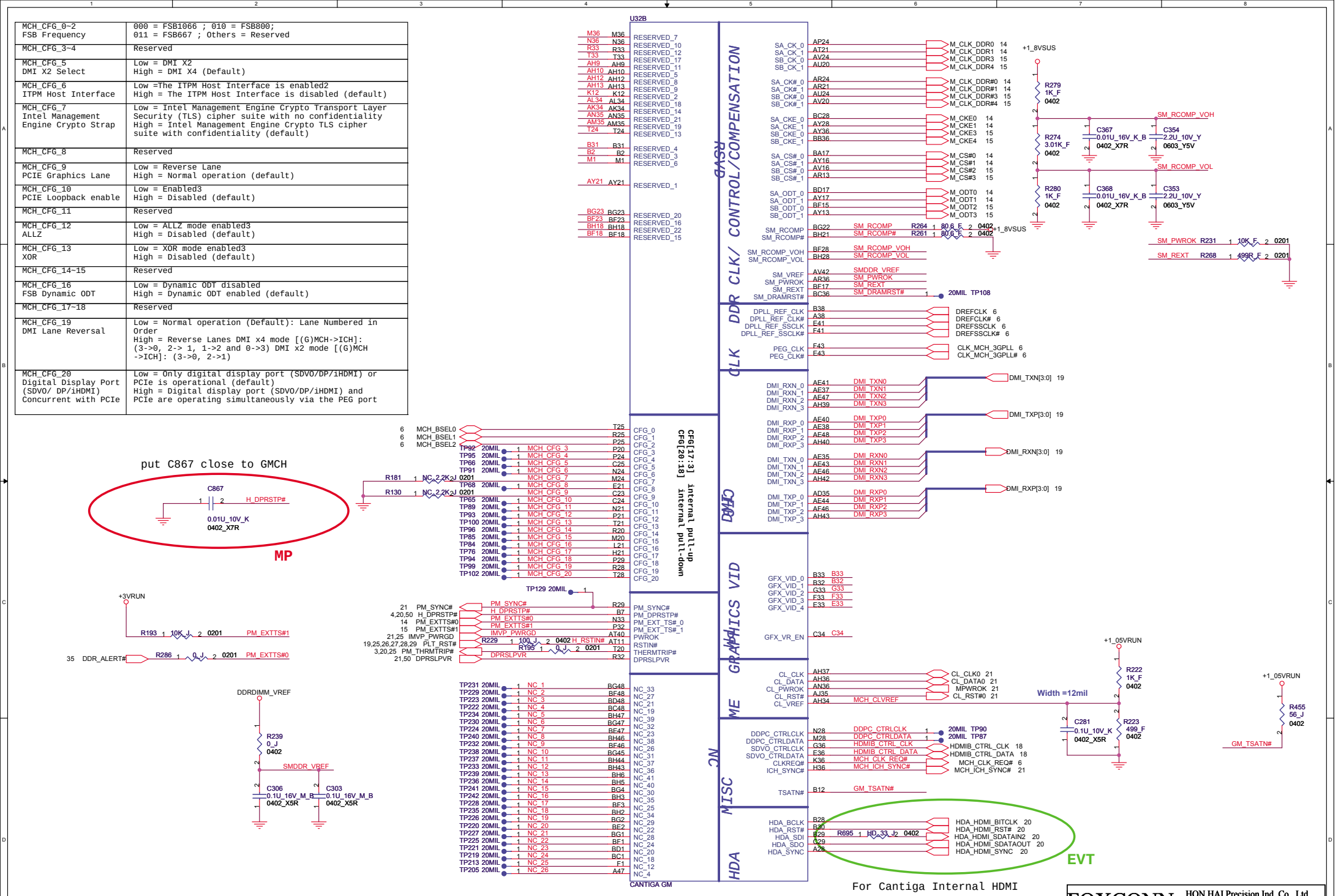

FOXCONN HON HAI Precision Ind. Co., Ltd. CCPBG - R&D Division

Title	Cantiga (DMI) 2/7	
Size Custom	Document Number M850-1-02	Rev 1.1
Date: Friday, April 17, 2009	Sheet 8 of 60	

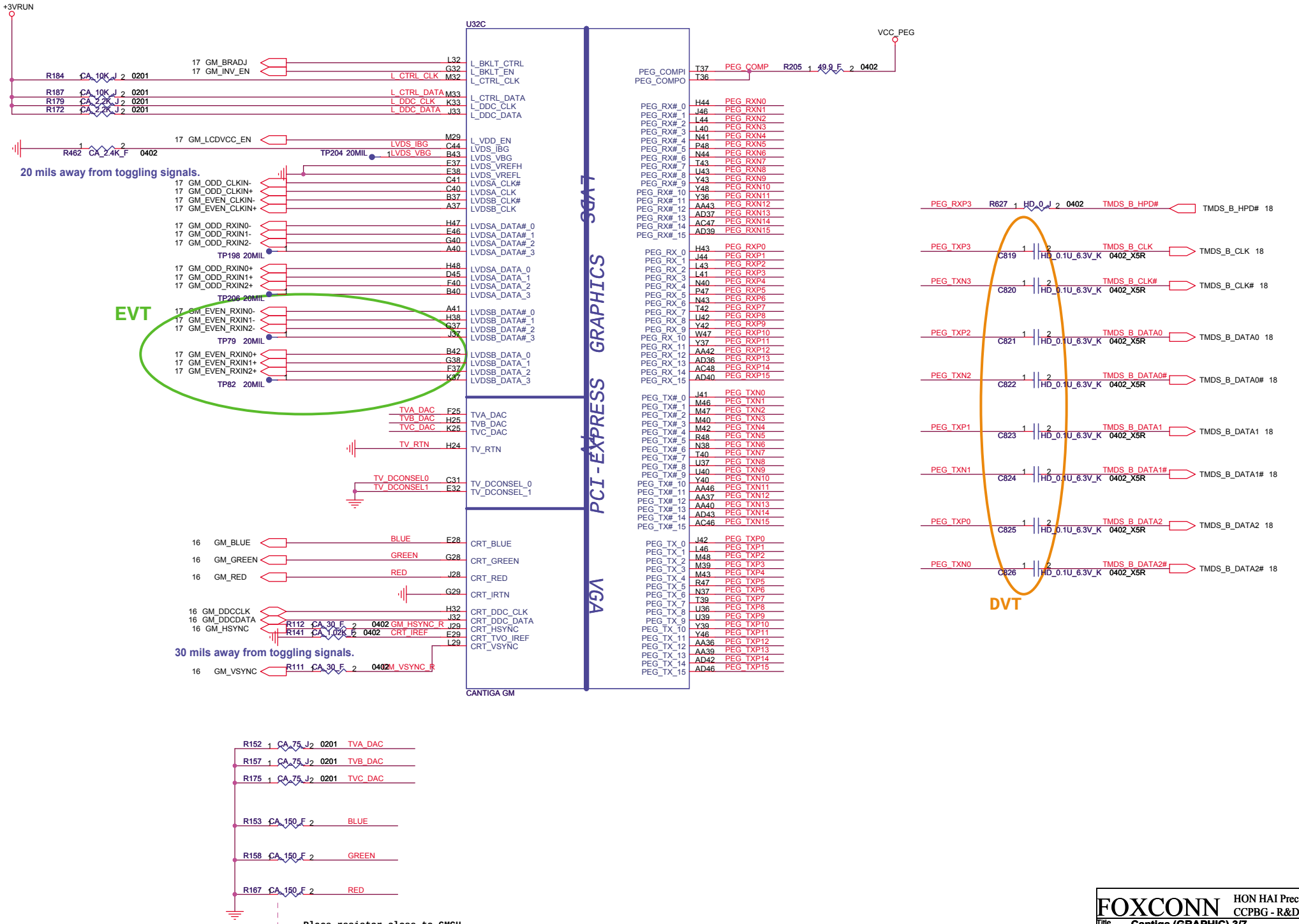

FOXCONN	HON HAI Precision Ind. Co., Ltd.
	CCPBG - R&D Division
Title	Cantiga (GRAPHIC) 3/7
Size A3	Document Number M850-1-02
Rev	1.1
Date:	Friday, April 17, 2009
Sheet	9 of 60

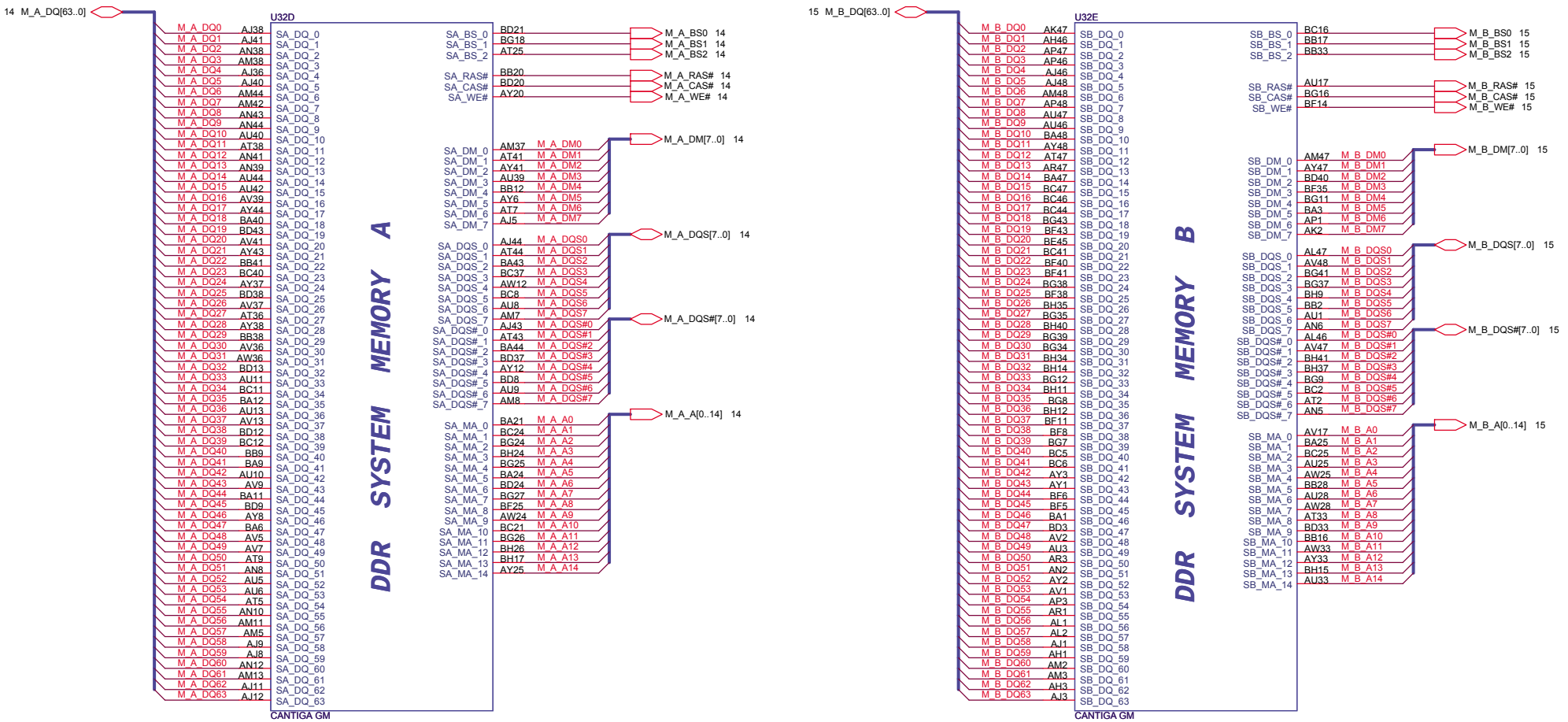

FOXCONN
HON HAI Precision Ind. Co., Ltd.
CCPBG - R&D Division

Title	Cantiga (DDRII) 4/7	
Size A3	Document Number M850-1-02	Rev 1.1
Date: Friday, April 17, 2009	Sheet 10 of 60	

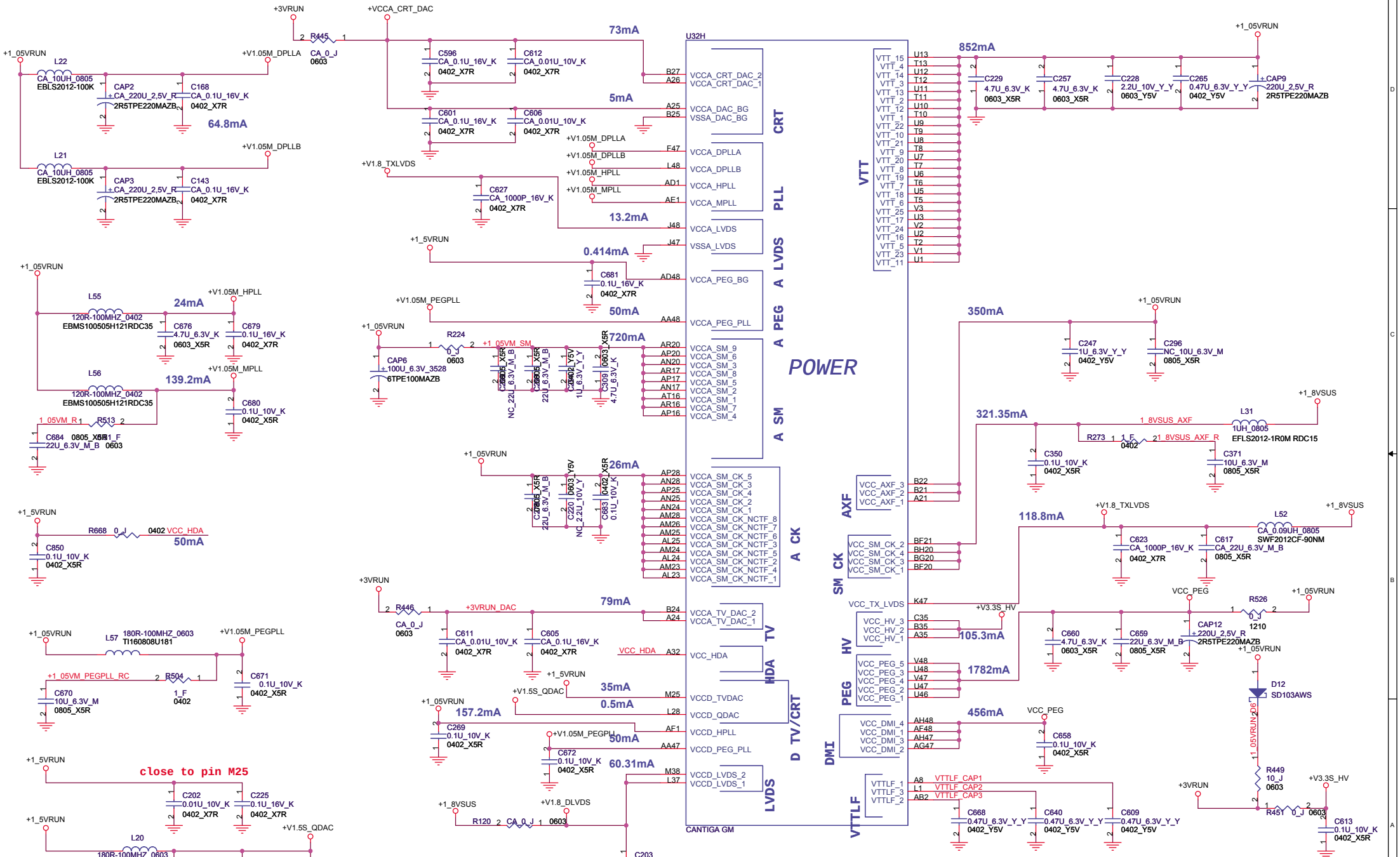
POWER
U32H
CANTIGA GM
CRT
PLL
A LVDS
A PEG
A SM
A CK
TV
HDA
D TV/CRT
LVDS
AXF
SM CK
HV
PEG
DMI
VTTLF
VTT
+3VRUN
+VCCA_CRT_DAC
+1_05VRUN
+1_8VSUS
+1_5VRUN
+V1.05M_DPLLA
+V1.05M_DPLLB
+V1.8_TXLVDS
+V1.05M_HPLL
+V1.05M_MPLL
+V1.05M_PEGPLL
+V1.5S_QDAC
+V1.8_DLVDS
+3VRUN_DAC
+V3.3S_HV
VCC_HDA
VCC_PEG
close to pin M25
73mA
5mA
64.8mA
13.2mA
0.414mA
50mA
720mA
24mA
139.2mA
26mA
79mA
35mA
0.5mA
157.2mA
50mA
60.31mA
852mA
350mA
321.35mA
118.8mA
105.3mA
1782mA
456mA
FOXCONN
HON HAI Precision Ind. Co., Ltd.
CCPBG - R&D Division
Title
Cantiga (POWER,VCC) 5/7
Size
A3
Document Number
M850-1-02
Rev
1.1
Date:
Friday, April 17, 2009
Sheet
11
of
60

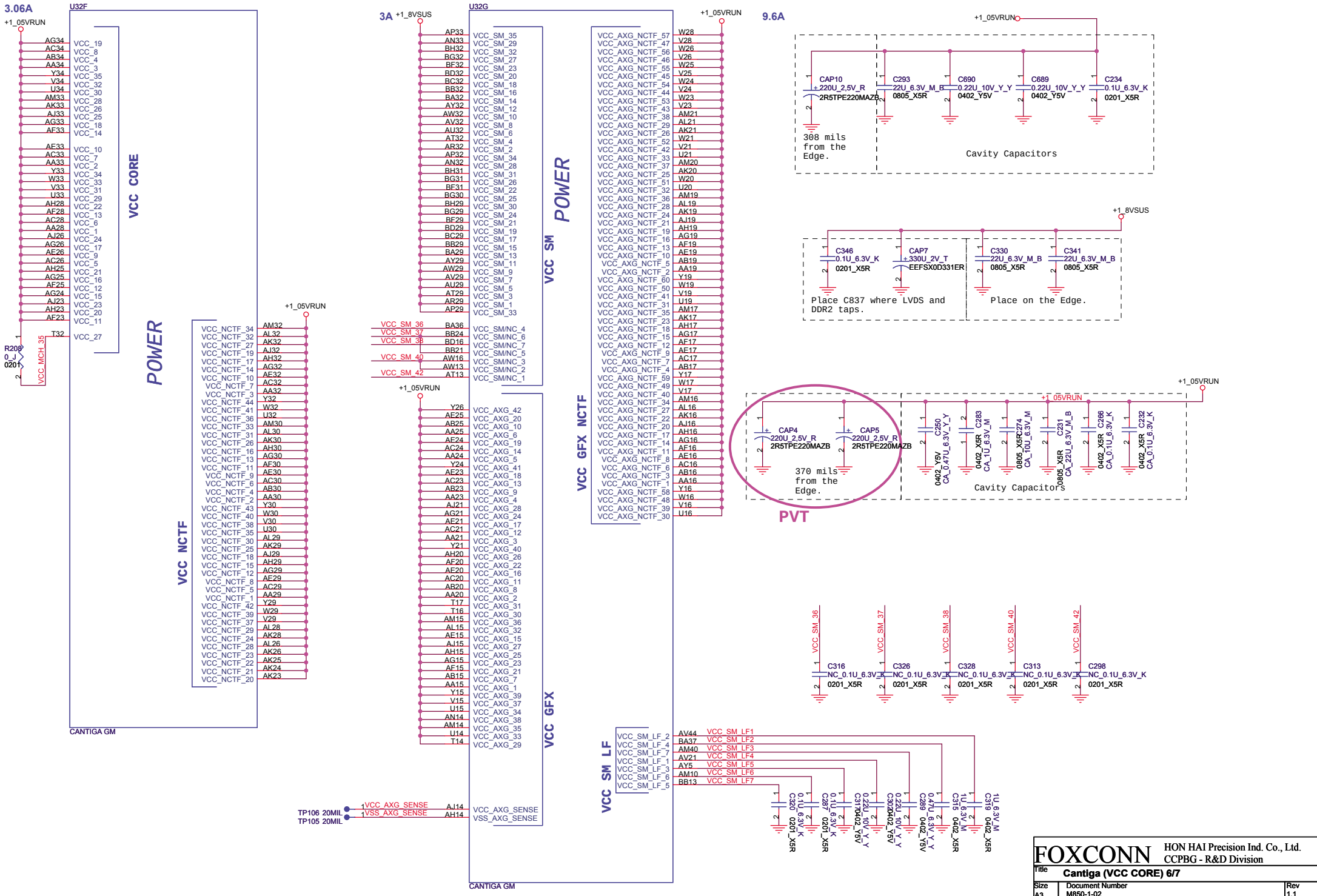
3.06A
U32F
+1_05VRUN
VCC_19
VCC_8
VCC_4
VCC_3
VCC_35
VCC_32
VCC_30
VCC_28
VCC_26
VCC_25
VCC_18
VCC_14
VCC_10
VCC_7
VCC_2
VCC_34
VCC_33
VCC_31
VCC_29
VCC_22
VCC_13
VCC_6
VCC_1
VCC_24
VCC_17
VCC_9
VCC_5
VCC_21
VCC_16
VCC_12
VCC_15
VCC_23
VCC_20
VCC_11
VCC_27
VCC CORE
POWER
R208
0_J
0201
VCC_MCH_35
VCC_NCTF_34
VCC_NCTF_32
VCC_NCTF_27
VCC_NCTF_19
VCC_NCTF_17
VCC_NCTF_14
VCC_NCTF_10
VCC_NCTF_7
VCC_NCTF_3
VCC_NCTF_44
VCC_NCTF_41
VCC_NCTF_36
VCC_NCTF_33
VCC_NCTF_31
VCC_NCTF_26
VCC_NCTF_16
VCC_NCTF_13
VCC_NCTF_11
VCC_NCTF_9
VCC_NCTF_6
VCC_NCTF_4
VCC_NCTF_2
VCC_NCTF_43
VCC_NCTF_40
VCC_NCTF_38
VCC_NCTF_35
VCC_NCTF_30
VCC_NCTF_25
VCC_NCTF_18
VCC_NCTF_15
VCC_NCTF_12
VCC_NCTF_8
VCC_NCTF_5
VCC_NCTF_1
VCC_NCTF_42
VCC_NCTF_39
VCC_NCTF_37
VCC_NCTF_29
VCC_NCTF_24
VCC_NCTF_28
VCC_NCTF_23
VCC_NCTF_22
VCC_NCTF_21
VCC_NCTF_20
AM32
AL32
AK32
AJ32
AH32
AG32
AE32
AC32
AA32
Y32
W32
U32
AM30
AL30
AK30
AH30
AG30
AE30
AC30
AB30
AA30
Y30
W30
V30
U30
AL29
AK29
AJ29
AH29
AG29
AE29
AC29
AA29
Y29
W29
V29
AL28
AK28
AL26
AK26
AK25
AK24
AK23
VCC NCTF
CANTIGA GM
3A
+1_8VSUS
U32G
AP33
AN33
BH32
BG32
BF32
BD32
BC32
BB32
BA32
AY32
AW32
AV32
AU32
AT32
AR32
AP32
AN32
BH31
BG31
BF31
BG30
BH29
BG29
BF29
BD29
BC29
BB29
BA29
AY29
AW29
AV29
AU29
AT29
AR29
AP29
VCC_SM_35
VCC_SM_29
VCC_SM_32
VCC_SM_27
VCC_SM_23
VCC_SM_20
VCC_SM_18
VCC_SM_16
VCC_SM_14
VCC_SM_12
VCC_SM_10
VCC_SM_8
VCC_SM_6
VCC_SM_4
VCC_SM_2
VCC_SM_34
VCC_SM_28
VCC_SM_31
VCC_SM_26
VCC_SM_22
VCC_SM_25
VCC_SM_30
VCC_SM_24
VCC_SM_21
VCC_SM_19
VCC_SM_17
VCC_SM_15
VCC_SM_13
VCC_SM_11
VCC_SM_9
VCC_SM_7
VCC_SM_5
VCC_SM_3
VCC_SM_1
VCC_SM_33
VCC SM
POWER
VCC_SM_36
VCC_SM_37
VCC_SM_38
VCC_SM_40
VCC_SM_42
BA36
BB24
BD16
BB21
AW16
AW13
AT13
VCC_SM/NC_4
VCC_SM/NC_6
VCC_SM/NC_7
VCC_SM/NC_5
VCC_SM/NC_3
VCC_SM/NC_2
VCC_SM/NC_1
+1_05VRUN
Y26
AE25
AB25
AA25
AE24
AC24
AA24
Y24
AE23
AC23
AB23
AA23
AJ21
AG21
AE21
AC21
AA21
Y21
AH20
AF20
AE20
AC20
AB20
AA20
T17
T16
AM15
AL15
AE15
AJ15
AH15
AG15
AF15
AB15
AA15
Y15
V15
U15
AN14
AM14
U14
T14
VCC_AXG_42
VCC_AXG_20
VCC_AXG_10
VCC_AXG_6
VCC_AXG_19
VCC_AXG_14
VCC_AXG_5
VCC_AXG_41
VCC_AXG_18
VCC_AXG_13
VCC_AXG_9
VCC_AXG_4
VCC_AXG_28
VCC_AXG_24
VCC_AXG_17
VCC_AXG_12
VCC_AXG_3
VCC_AXG_40
VCC_AXG_26
VCC_AXG_22
VCC_AXG_16
VCC_AXG_11
VCC_AXG_8
VCC_AXG_2
VCC_AXG_31
VCC_AXG_30
VCC_AXG_36
VCC_AXG_32
VCC_AXG_15
VCC_AXG_27
VCC_AXG_25
VCC_AXG_23
VCC_AXG_21
VCC_AXG_7
VCC_AXG_1
VCC_AXG_39
VCC_AXG_37
VCC_AXG_34
VCC_AXG_38
VCC_AXG_35
VCC_AXG_33
VCC_AXG_29
VCC GFX
TP106 20MIL
TP105 20MIL
VCC_AXG_SENSE
VSS_AXG_SENSE
AJ14
AH14
VCC_AXG_SENSE
VSS_AXG_SENSE
+1_05VRUN
VCC_AXG_NCTF_57
VCC_AXG_NCTF_47
VCC_AXG_NCTF_56
VCC_AXG_NCTF_46
VCC_AXG_NCTF_55
VCC_AXG_NCTF_45
VCC_AXG_NCTF_54
VCC_AXG_NCTF_44
VCC_AXG_NCTF_53
VCC_AXG_NCTF_43
VCC_AXG_NCTF_38
VCC_AXG_NCTF_29
VCC_AXG_NCTF_26
VCC_AXG_NCTF_52
VCC_AXG_NCTF_42
VCC_AXG_NCTF_33
VCC_AXG_NCTF_37
VCC_AXG_NCTF_25
VCC_AXG_NCTF_51
VCC_AXG_NCTF_32
VCC_AXG_NCTF_36
VCC_AXG_NCTF_28
VCC_AXG_NCTF_24
VCC_AXG_NCTF_21
VCC_AXG_NCTF_19
VCC_AXG_NCTF_16
VCC_AXG_NCTF_13
VCC_AXG_NCTF_10
VCC_AXG_NCTF_5
VCC_AXG_NCTF_2
VCC_AXG_NCTF_60
VCC_AXG_NCTF_50
VCC_AXG_NCTF_41
VCC_AXG_NCTF_31
VCC_AXG_NCTF_35
VCC_AXG_NCTF_23
VCC_AXG_NCTF_18
VCC_AXG_NCTF_15
VCC_AXG_NCTF_12
VCC_AXG_NCTF_9
VCC_AXG_NCTF_7
VCC_AXG_NCTF_4
VCC_AXG_NCTF_59
VCC_AXG_NCTF_49
VCC_AXG_NCTF_40
VCC_AXG_NCTF_34
VCC_AXG_NCTF_27
VCC_AXG_NCTF_22
VCC_AXG_NCTF_20
VCC_AXG_NCTF_17
VCC_AXG_NCTF_14
VCC_AXG_NCTF_11
VCC_AXG_NCTF_8
VCC_AXG_NCTF_6
VCC_AXG_NCTF_3
VCC_AXG_NCTF_1
VCC_AXG_NCTF_58
VCC_AXG_NCTF_48
VCC_AXG_NCTF_39
VCC_AXG_NCTF_30
W28
V28
W26
V26
W25
V25
W24
V24
W23
V23
AM21
AL21
AK21
W21
V21
U21
AM20
AK20
W20
U20
AM19
AL19
AK19
AJ19
AH19
AG19
AF19
AE19
AB19
AA19
Y19
W19
V19
U19
AM17
AK17
AH17
AG17
AF17
AE17
AC17
AB17
Y17
W17
V17
AM16
AL16
AK16
AJ16
AH16
AG16
AF16
AE16
AC16
AB16
AA16
Y16
W16
V16
U16
VCC GFX NCTF
POWER
VCC_SM_LF_2
VCC_SM_LF_4
VCC_SM_LF_7
VCC_SM_LF_1
VCC_SM_LF_3
VCC_SM_LF_6
VCC_SM_LF_5
AV44
BA37
AM40
AV21
AY5
AM10
BB13
VCC_SM_LF1
VCC_SM_LF2
VCC_SM_LF3
VCC_SM_LF4
VCC_SM_LF5
VCC_SM_LF6
VCC_SM_LF7
VCC SM LF
C320 0.1U_6.3V_K 0201_X5R
C287 0.1U_6.3V_K 0201_X5R
C317 0.22U_10V_Y_Y 0402_Y5V
C302 0.22U_10V_Y_Y 0402_Y5V
C289 0.47U_6.3V_Y 0402_Y5V
C315 1U_6.3V_M 0402_X5R
C319 1U_6.3V_M 0402_X5R
9.6A
+1_05VRUN
CAP10
220U_2.5V_R
2R5TPE220MAZB
308 mils
from the
Edge.
C293
22U_6.3V_M_B
0805_X5R
C690
0.22U_10V_Y_Y
0402_Y5V
C689
0.22U_10V_Y_Y
0402_Y5V
C234
0.1U_6.3V_K
0201_X5R
Cavity Capacitors
+1_8VSUS
C346
0.1U_6.3V_K
0201_X5R
CAP7
330U_2V_T
EEFSX0D331ER
Place C837 where LVDS and
DDR2 taps.
C330
22U_6.3V_M_B
0805_X5R
C341
22U_6.3V_M_B
0805_X5R
Place on the Edge.
+1_05VRUN
CAP4
220U_2.5V_R
2R5TPE220MAZB
CAP5
220U_2.5V_R
2R5TPE220MAZB
370 mils
from the
Edge.
PVT
+1_05VRUN
C250 0402_Y5V CA_0.47U_6.3V_Y_Y
C283 0402_X5R CA_1U_6.3V_M
C274 0805_X5R CA_10U_6.3V_M
C231 0805_X5R CA_22U_6.3V_M_B
C266 0402_X5R CA_0.1U_6.3V_K
C232 0402_X5R CA_0.1U_6.3V_K
Cavity Capacitors
VCC_SM_36
VCC_SM_37
VCC_SM_38
VCC_SM_40
VCC_SM_42
C316 NC_0.1U_6.3V_K 0201_X5R
C326 NC_0.1U_6.3V_K 0201_X5R
C328 NC_0.1U_6.3V_K 0201_X5R
C313 NC_0.1U_6.3V_K 0201_X5R
C298 NC_0.1U_6.3V_K 0201_X5R
FOXCONN
HON HAI Precision Ind. Co., Ltd.
CCPBG - R&D Division
Title
Cantiga (VCC CORE) 6/7
Size
A3
Document Number
M850-1-02
Rev
1.1
Date:
Friday, April 17, 2009
Sheet
12
of
60

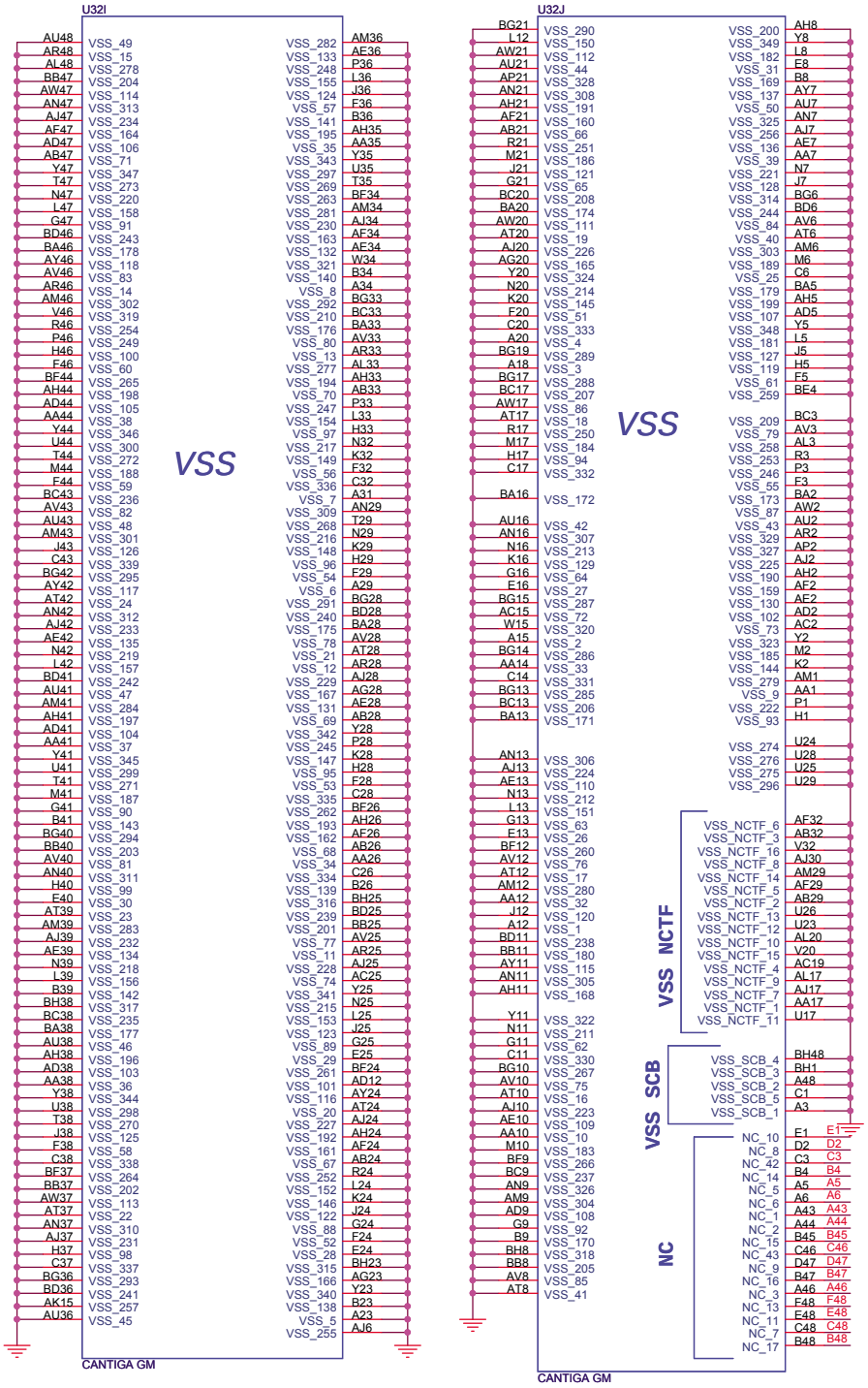

FOXCONN	HON HAI Precision Ind. Co., Ltd. CCPBG - R&D Division	
Title	Cantiga (VSS) 7/7	
Size A3	Document Number M850-1-02	Rev 1.1
Date: Friday, April 17, 2009	Sheet 13 of 60	

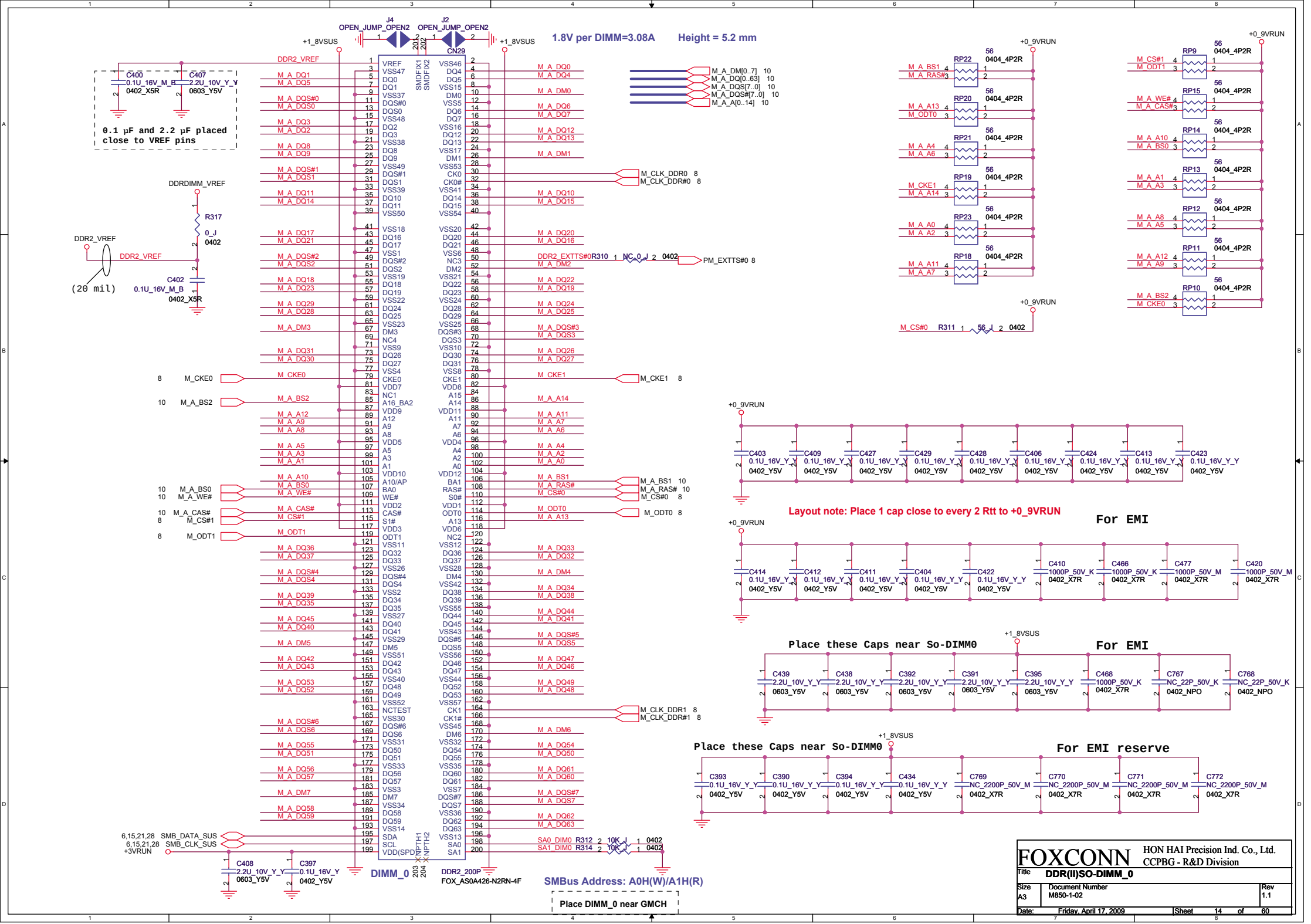
J4 OPEN_JUMP_OPEN2
J2 OPEN_JUMP_OPEN2
CN29
+1_8VSUS
1.8V per DIMM=3.08A
Height = 5.2 mm
DDR2_VREF
C400 0.1U_16V_M_B 0402_X5R
C407 2.2U_10V_Y_Y 0603_Y5V
0.1 µF and 2.2 µF placed close to VREF pins
DDRDIMM_VREF
R317 0_J 0402
C402 0.1U_16V_M_B 0402_X5R
(20 mil)
M_A_DM[0..7] 10
M_A_DQ[0..63] 10
M_A_DQS[7..0] 10
M_A_DQS#[7..0] 10
M_A_A[0..14] 10
M_CLK_DDR0 8
M_CLK_DDR#0 8
DDR2_EXTTS#0 R310 NC_0_J 0402
PM_EXTTS#0 8
M_CKE0 8
M_CKE1 8
M_A_BS2 10
M_A_BS0 10
M_A_WE# 10
M_A_CAS# 10
M_CS#1 8
M_ODT1 8
M_ODT0 8
M_CLK_DDR1 8
M_CLK_DDR#1 8
6,15,21,28 SMB_DATA_SUS
6,15,21,28 SMB_CLK_SUS
+3VRUN
SA0_DIMM0 R312 10K_J 0402
SA1_DIMM0 R314 10K_J 0402
C408 2.2U_10V_Y_Y 0603_Y5V
C397 0.1U_16V_Y 0402_Y5V
DIMM_0
DDR2_200P
FOX_AS0A426-N2RN-4F
SMBus Address: A0H(W)/A1H(R)
Place DIMM_0 near GMCH
+0_9VRUN
RP22 56 0404_4P2R
RP20 56 0404_4P2R
RP21 56 0404_4P2R
RP19 56 0404_4P2R
RP23 56 0404_4P2R
RP18 56 0404_4P2R
RP9 56 0404_4P2R
RP15 56 0404_4P2R
RP14 56 0404_4P2R
RP13 56 0404_4P2R
RP12 56 0404_4P2R
RP11 56 0404_4P2R
RP10 56 0404_4P2R
M_CS#0 R311 56_J 0402
C403 C409 C427 C429 C428 C406 C424 C413 C423 0.1U_16V_Y_Y 0402_Y5V
Layout note: Place 1 cap close to every 2 Rtt to +0_9VRUN
For EMI
C414 C412 C411 C404 C422 0.1U_16V_Y_Y 0402_Y5V
C410 1000P_50V_K 0402_X7R
C466 1000P_50V_K 0402_X7R
C477 1000P_50V_M 0402_X7R
C420 1000P_50V_M 0402_X7R
Place these Caps near So-DIMM0
C439 C438 C392 C391 2.2U_10V_Y_Y 0603_Y5V
C395 2.2U_10V_Y_Y 0603_Y5V
C468 1000P_50V_K 0402_X7R
C767 NC_22P_50V_K 0402_NPO
C768 NC_22P_50V_K 0402_NPO
Place these Caps near So-DIMM0
For EMI reserve
C393 C390 C394 0.1U_16V_Y_Y 0402_Y5V
C434 0.1U_16V_Y_Y 0402_Y5V
C769 NC_2200P_50V_M 0402_X7R
C770 NC_2200P_50V_M 0402_X7R
C771 NC_2200P_50V_M 0402_X7R
C772 NC_2200P_50V_M 0402_X7R
FOXCONN
HON HAI Precision Ind. Co., Ltd.
CCPBG - R&D Division
Title DDR(II)SO-DIMM_0
Size A3
Document Number M850-1-02
Rev 1.1
Date: Friday, April 17, 2009
Sheet 14 of 60

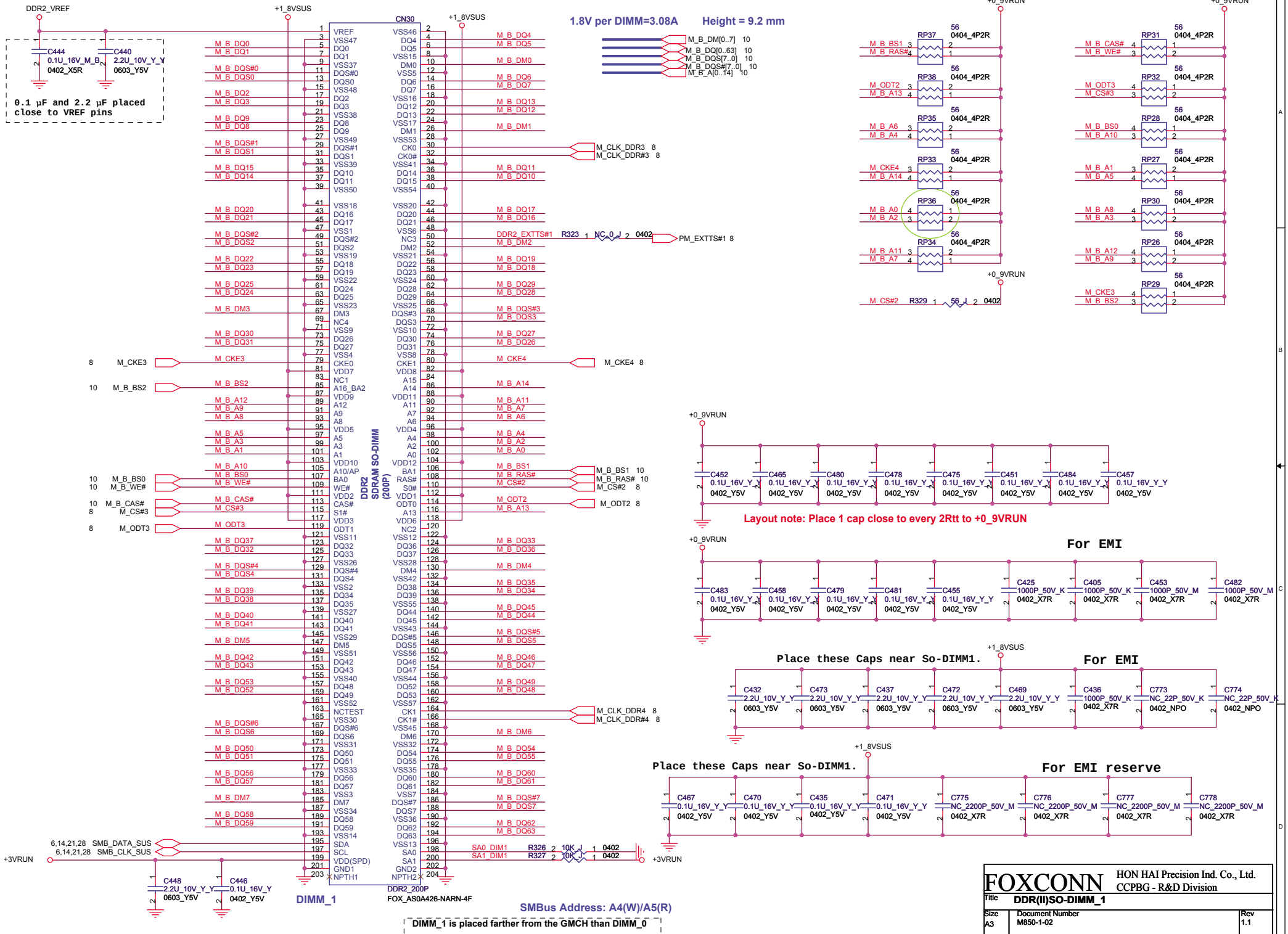
DDR2_VREF
+1_8VSUS
C444 0.1U_16V_M_B 0402_X5R
C440 2.2U_10V_Y_Y 0603_Y5V
0.1 µF and 2.2 µF placed close to VREF pins
CN30
DDR2 SDRAM SO-DIMM (200P)
DDR2_200P
FOX_AS0A426-NARN-4F
DIMM_1
1.8V per DIMM=3.08A
Height = 9.2 mm
M_B_DM[0..7] 10
M_B_DQ[0..63] 10
M_B_DQS[7..0] 10
M_B_DQS#[7..0] 10
M_B_A[0..14] 10
M_CLK_DDR3 8
M_CLK_DDR#3 8
M_CLK_DDR4 8
M_CLK_DDR#4 8
DDR2_EXTTS#1 R323 NC_0_J 0402
PM_EXTTS#1 8
M_CKE3 8
M_CKE4 8
M_B_BS2 10
M_B_BS1 10
M_B_RAS# 10
M_CS#2 8
M_ODT2 8
M_ODT3 8
M_B_BS0 10
M_B_WE# 10
M_B_CAS# 10
M_CS#3 8
6,14,21,28 SMB_DATA_SUS
6,14,21,28 SMB_CLK_SUS
+3VRUN
SA0_DIM1 R326 10K 0402
SA1_DIM1 R327 10K 0402
C448 2.2U_10V_Y_Y 0603_Y5V
C446 0.1U_16V_Y 0402_Y5V
SMBus Address: A4(W)/A5(R)
DIMM_1 is placed farther from the GMCH than DIMM_0
+0_9VRUN
RP37 RP31 RP38 RP32 RP35 RP28 RP33 RP27 RP36 RP30 RP34 RP26 RP29
56 0404_4P2R
M_B_BS1 M_B_RAS# M_ODT2 M_B_A13 M_B_A6 M_B_A4 M_CKE4 M_B_A14 M_B_A0 M_B_A2 M_B_A11 M_B_A7
M_B_CAS# M_B_WE# M_ODT3 M_CS#3 M_B_BS0 M_B_A10 M_B_A1 M_B_A5 M_B_A8 M_B_A3 M_B_A12 M_B_A9 M_CKE3 M_B_BS2
M_CS#2 R329 56 0402
Layout note: Place 1 cap close to every 2Rtt to +0_9VRUN
C452 C465 C480 C478 C475 C451 C484 C457 0.1U_16V_Y_Y 0402_Y5V
For EMI
C483 C458 C479 C481 C455 0.1U_16V_Y_Y 0402_Y5V
C425 C405 C453 C482 1000P_50V_K 1000P_50V_M 0402_X7R
Place these Caps near So-DIMM1.
C432 C473 C437 C472 C469 2.2U_10V_Y_Y 0603_Y5V
C436 1000P_50V_K 0402_X7R
C773 NC_22P_50V_K 0402_NPO
C774 NC_22P_50V_K 0402_NPO
C467 C470 C435 C471 0.1U_16V_Y_Y 0402_Y5V
For EMI reserve
C775 C776 C777 C778 NC_2200P_50V_M 0402_X7R
FOXCONN
HON HAI Precision Ind. Co., Ltd.
CCPBG - R&D Division
Title DDR(II)SO-DIMM_1
Size A3
Document Number M850-1-02
Rev 1.1
Date: Friday, April 17, 2009
Sheet 15 of 60

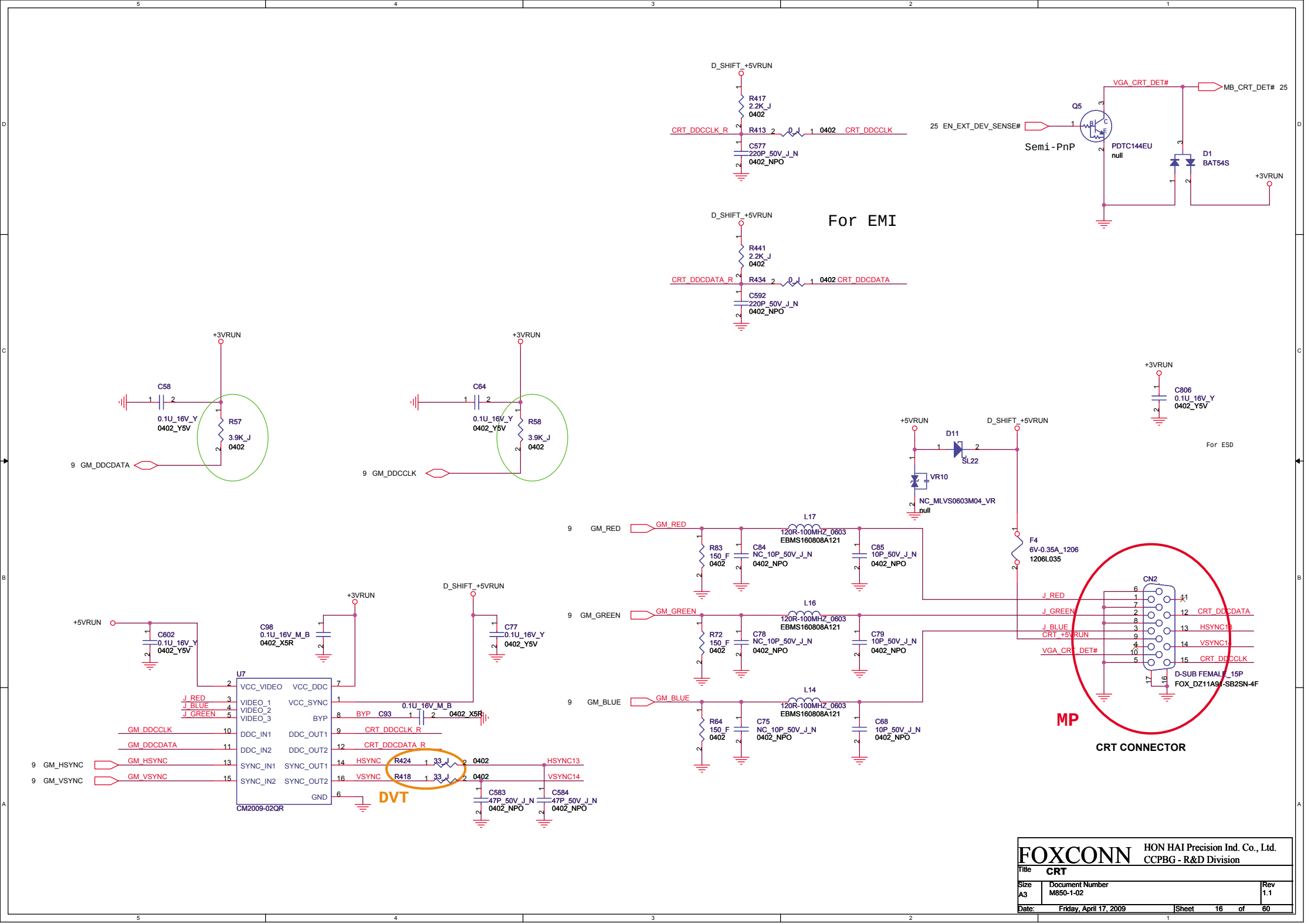

FOXCONN	HON HAI Precision Ind. Co., Ltd. CCPBG - R&D Division	
Title	CRT	
Size A3	Document Number M850-1-02	Rev 1.1
Date: Friday, April 17, 2009	Sheet 16 of 60	

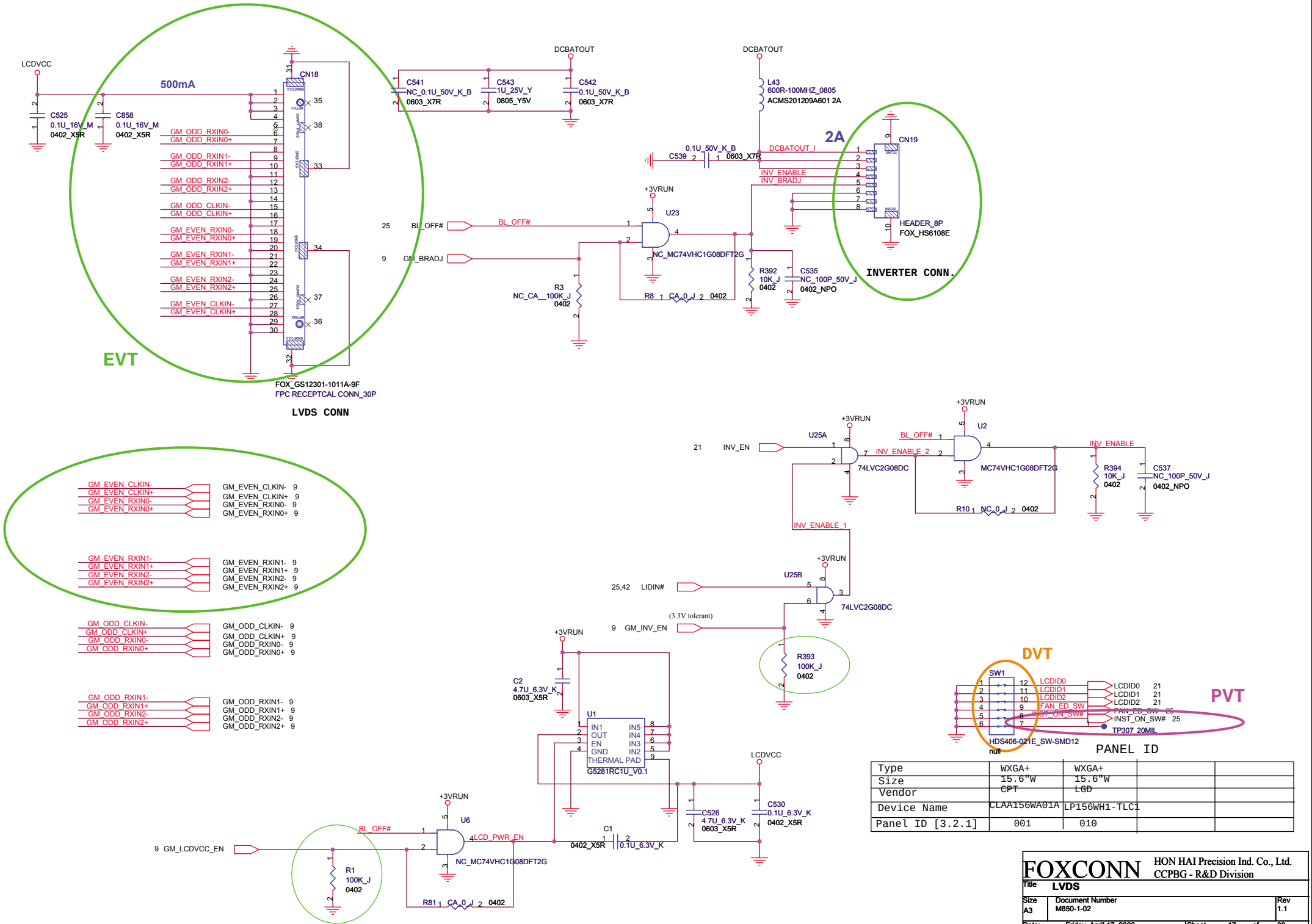

Type	WXGA+	WXGA+		
Size	15.6"W	15.6"W		
Vendor	CPT	LGD		
Device Name	CLAA156WA01A	LP156WH1-TLC1		
Panel ID [3.2.1]	001	010		

FOXCONN
HON HAI Precision Ind. Co., Ltd.
CCPBG - R&D Division

Title: LVDS

Size: A3 | Document Number: M850-1-02 | Rev: 1.1

Date: Friday, April 17, 2009 | Sheet 17 of 60

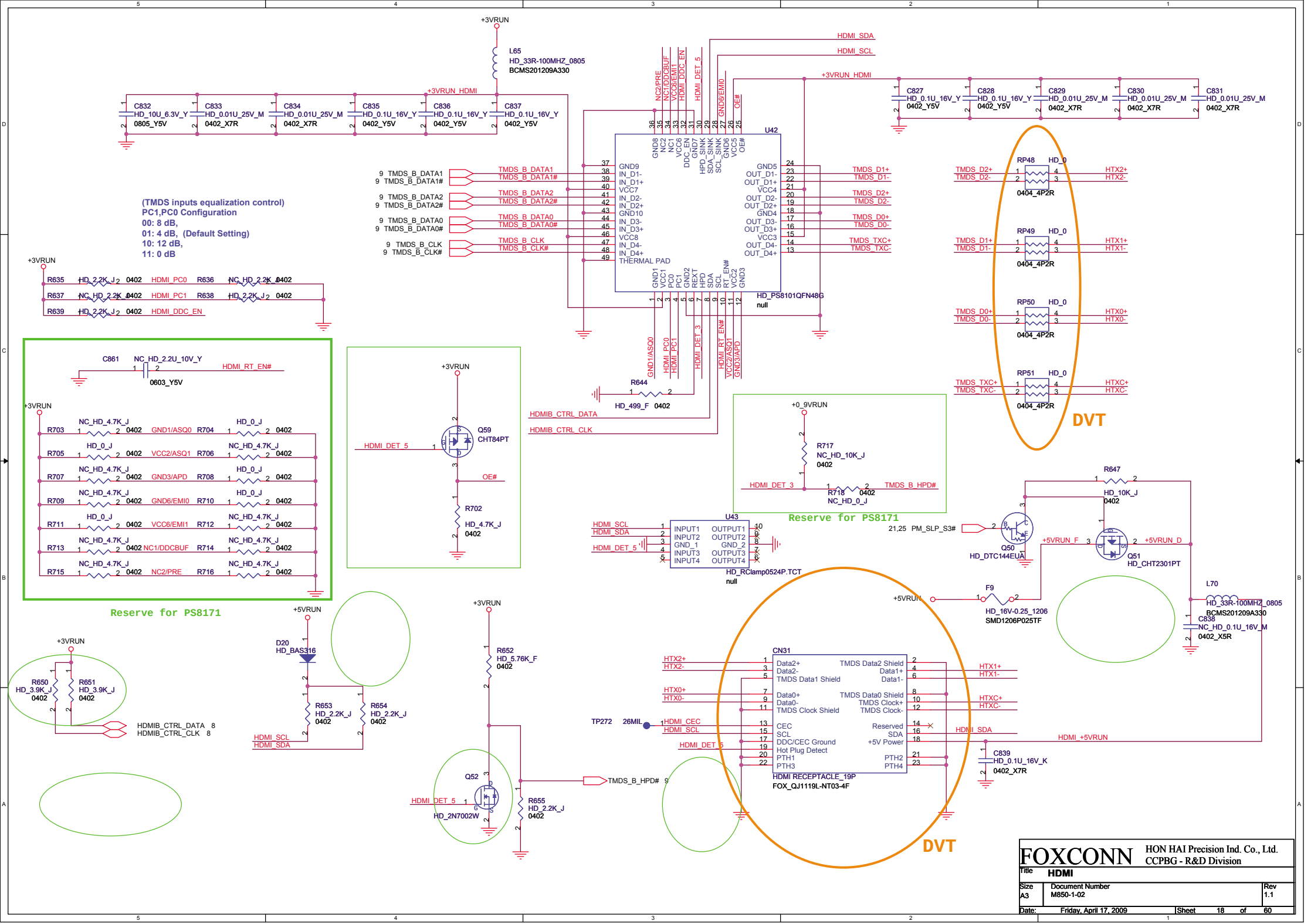
+3VRUN
L65
HD_33R-100MHZ_0805
BCMS201209A330
+3VRUN_HDMI
C832 HD_10U_6.3V_Y 0805_Y5V
C833 HD_0.01U_25V_M 0402_X7R
C834 HD_0.01U_25V_M 0402_X7R
C835 HD_0.1U_16V_Y 0402_Y5V
C836 HD_0.1U_16V_Y 0402_Y5V
C837 HD_0.1U_16V_Y 0402_Y5V
HDMI_SDA
HDMI_SCL
+3VRUN_HDMI
C827 HD_0.1U_16V_Y 0402_Y5V
C828 HD_0.1U_16V_Y 0402_Y5V
C829 HD_0.01U_25V_M 0402_X7R
C830 HD_0.01U_25V_M 0402_X7R
C831 HD_0.01U_25V_M 0402_X7R
U42
HD_PS8101QFN48G
null
TMDS_B_DATA1
TMDS_B_DATA1#
TMDS_B_DATA2
TMDS_B_DATA2#
TMDS_B_DATA0
TMDS_B_DATA0#
TMDS_B_CLK
TMDS_B_CLK#
TMDS_D1+
TMDS_D1-
TMDS_D2+
TMDS_D2-
TMDS_D0+
TMDS_D0-
TMDS_TXC+
TMDS_TXC-
RP48 HD_0 0404_4P2R
RP49 HD_0 0404_4P2R
RP50 HD_0 0404_4P2R
RP51 HD_0 0404_4P2R
HTX2+
HTX2-
HTX1+
HTX1-
HTX0+
HTX0-
HTXC+
HTXC-
DVT
(TMDS inputs equalization control)
PC1,PC0 Configuration
00: 8 dB,
01: 4 dB, (Default Setting)
10: 12 dB,
11: 0 dB
+3VRUN
R635 HD_2.2K_J 0402 HDMI_PC0
R636 NC_HD_2.2K_J 0402
R637 NC_HD_2.2K_J 0402 HDMI_PC1
R638 HD_2.2K_J 0402
R639 HD_2.2K_J 0402 HDMI_DDC_EN
C861 NC_HD_2.2U_10V_Y 0603_Y5V
HDMI_RT_EN#
Reserve for PS8171
R644 HD_499_F 0402
HDMIB_CTRL_DATA
HDMIB_CTRL_CLK
Q59 CHT84PT
HDMI_DET_5
OE#
R702 HD_4.7K_J 0402
+0_9VRUN
R717 NC_HD_10K_J 0402
R718 NC_HD_0_J 0402
HDMI_DET_3
TMDS_B_HPD#
Reserve for PS8171
U43
HD_RClamp0524P.TCT
null
21,25 PM_SLP_S3#
Q50 HD_DTC144EUA
R647 HD_10K_J 0402
Q51 HD_CHT2301PT
+5VRUN_F
+5VRUN_D
F9 HD_16V-0.25_1206 SMD1206P025TF
L70 HD_33R-100MHZ_0805 BCMS201209A330
C838 NC_HD_0.1U_16V_M 0402_X5R
+5VRUN
D20 HD_BAS316
R650 HD_3.9K_J 0402
R651 HD_3.9K_J 0402
R653 HD_2.2K_J 0402
R654 HD_2.2K_J 0402
HDMIB_CTRL_DATA 8
HDMIB_CTRL_CLK 8
HDMI_SCL
HDMI_SDA
R652 HD_5.76K_F 0402
Q52 HD_2N7002W
R655 HD_2.2K_J 0402
TMDS_B_HPD# 9
TP272 26MIL
HDMI_CEC
CN31
HDMI RECEPTACLE_19P
FOX_QJ1119L-NT03-4F
HDMI_+5VRUN
C839 HD_0.1U_16V_K 0402_X7R
FOXCONN
HON HAI Precision Ind. Co., Ltd.
CCPBG - R&D Division
Title HDMI
Size A3
Document Number M850-1-02
Rev 1.1
Date: Friday, April 17, 2009
Sheet 18 of 60

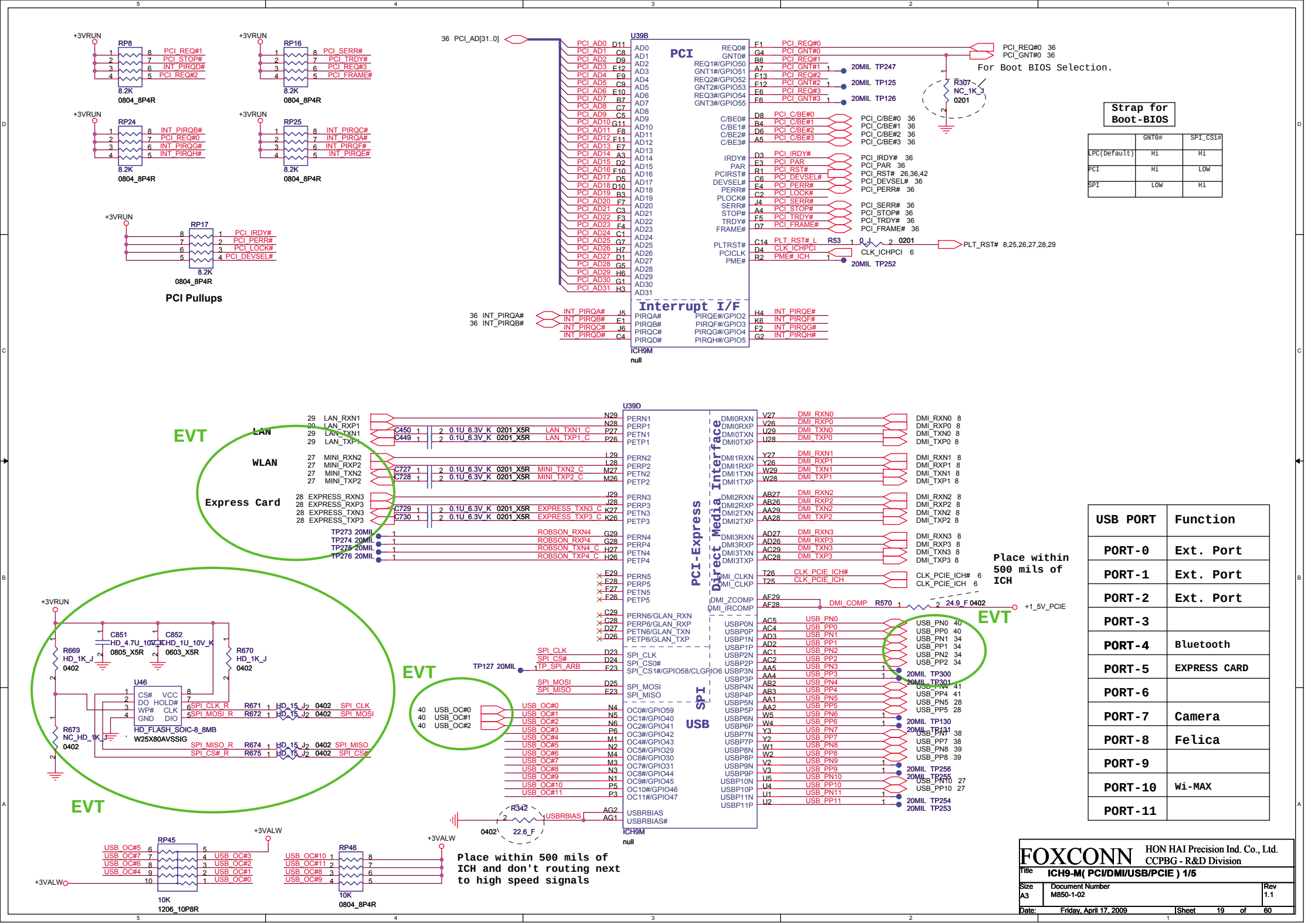

USB PORT	Function
PORT-0	Ext. Port
PORT-1	Ext. Port
PORT-2	Ext. Port
PORT-3	
PORT-4	Bluetooth
PORT-5	EXPRESS CARD
PORT-6	
PORT-7	Camera
PORT-8	Felica
PORT-9	
PORT-10	Wi-MAX
PORT-11	

FOXCONN
HON HAI Precision Ind. Co., Ltd.
CCPBG - R&D Division

Title	ICH9-M(PCI/DMI/USB/PCIE) 1/5	
Size: A3	Document Number: M850-1-02	Rev: 1.1
Date: Friday, April 17, 2009	Sheet 19 of 60	

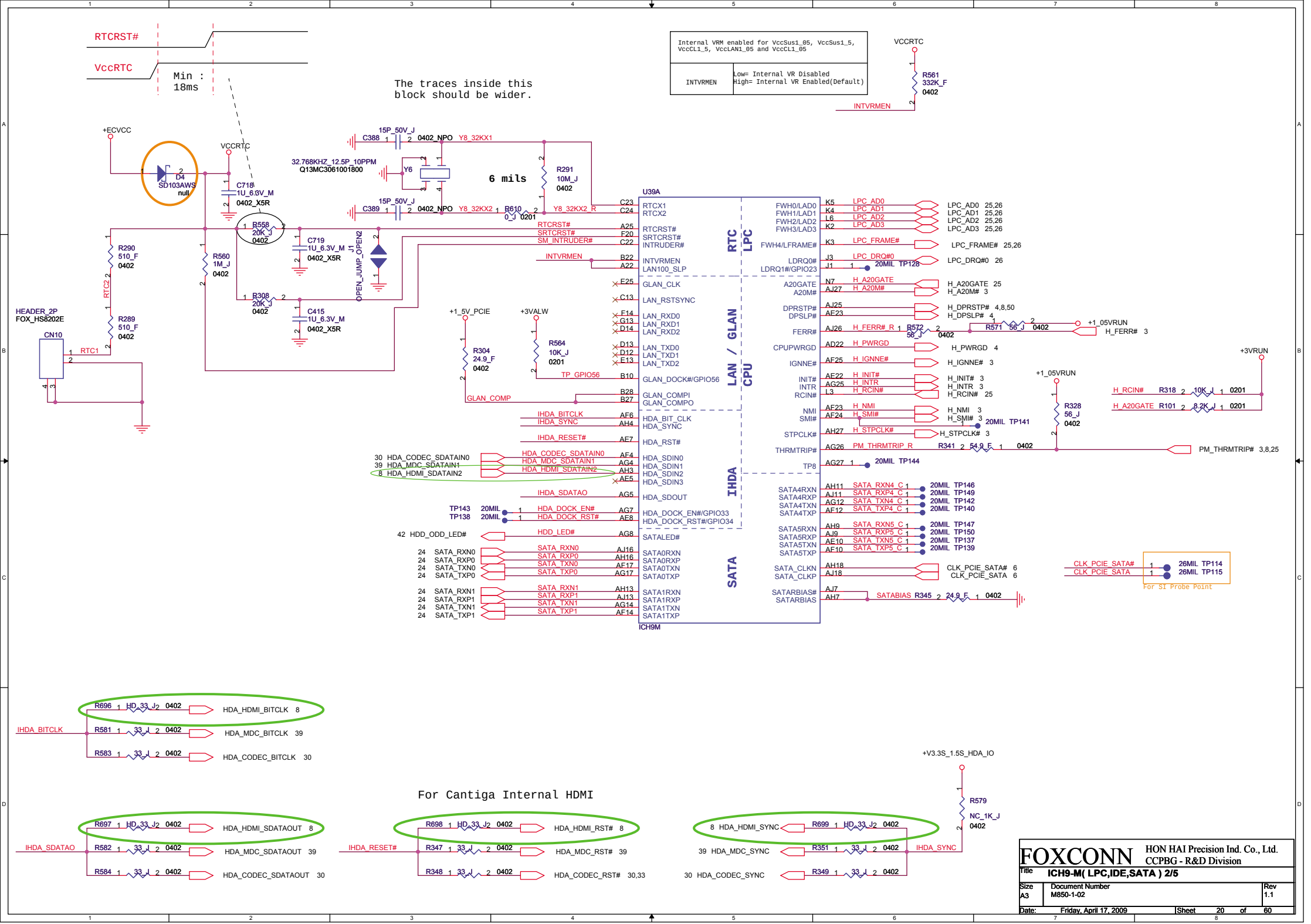
RTCRST#
VccRTC
Min : 18ms
The traces inside this block should be wider.
Internal VRM enabled for VccSus1_05, VccSus1_5, VccCL1_5, VccLAN1_05 and VccCL1_05
INTVRMEN
Low= Internal VR Disabled
High= Internal VR Enabled(Default)
VCCRTC
R561 332K_F 0402
INTVRMEN
+ECVCC
D4 SD103AWS null
C718 1U_6.3V_M 0402_X5R
R558 20K_J 0402
R560 1M_J 0402
R290 510_F 0402
R289 510_F 0402
RTC2
RTC1
HEADER_2P FOX_HS8202E
CN10
C719 1U_6.3V_M 0402_X5R
C415 1U_6.3V_M 0402_X5R
R308 20K_J 0402
J1 OPEN_JUMP_OPEN2
C388 15P_50V_J 0402_NPO Y8_32KX1
32.768KHZ_12.5P_10PPM Q13MC3061001800
Y6
6 mils
C389 15P_50V_J 0402_NPO Y8_32KX2
R610 0_J 0201
R291 10M_J 0402
Y8_32KX2_R
RTCRST#
SRTCRST#
SM_INTRUDER#
INTVRMEN
+1_5V_PCIE
+3VALW
R304 24.9_F 0402
R564 10K_J 0201
TP_GPIO56
GLAN_COMP
U39A
RTCX1
RTCX2
RTCRST#
SRTCRST#
INTRUDER#
INTVRMEN
LAN100_SLP
GLAN_CLK
LAN_RSTSYNC
LAN_RXD0
LAN_RXD1
LAN_RXD2
LAN_TXD0
LAN_TXD1
LAN_TXD2
GLAN_DOCK#/GPIO56
GLAN_COMPI
GLAN_COMPO
HDA_BIT_CLK
HDA_SYNC
HDA_RST#
HDA_SDIN0
HDA_SDIN1
HDA_SDIN2
HDA_SDIN3
HDA_SDOUT
HDA_DOCK_EN#/GPIO33
HDA_DOCK_RST#/GPIO34
SATALED#
SATA0RXN
SATA0RXP
SATA0TXN
SATA0TXP
SATA1RXN
SATA1RXP
SATA1TXN
SATA1TXP
RTC
LPC
LAN / GLAN
CPU
IHDA
SATA
ICH9M
FWH0/LAD0
FWH1/LAD1
FWH2/LAD2
FWH3/LAD3
FWH4/LFRAME#
LDRQ0#
LDRQ1#/GPIO23
A20GATE
A20M#
DPRSTP#
DPSLP#
FERR#
CPUPWRGD
IGNNE#
INIT#
INTR
RCIN#
NMI
SMI#
STPCLK#
THRMTRIP#
TP8
SATA4RXN
SATA4RXP
SATA4TXN
SATA4TXP
SATA5RXN
SATA5RXP
SATA5TXN
SATA5TXP
SATA_CLKN
SATA_CLKP
SATARBIAS#
SATARBIAS
LPC_AD0 25,26
LPC_AD1 25,26
LPC_AD2 25,26
LPC_AD3 25,26
LPC_FRAME# 25,26
LPC_DRQ#0 26
H_A20GATE 25
H_A20M# 3
H_DPRSTP# 4,8,50
H_DPSLP# 4
H_FERR# 3
+1_05VRUN
H_PWRGD 4
H_IGNNE# 3
H_INIT# 3
H_INTR 3
H_RCIN# 25
H_NMI 3
H_SMI# 3
H_STPCLK# 3
PM_THRMTRIP# 3,8,25
+3VRUN
H_RCIN# R318 10K_J 0201
H_A20GATE R101 8.2K_J 0201
CLK_PCIE_SATA# 6
CLK_PCIE_SATA 6
26MIL TP114
26MIL TP115
For SI Probe Point
SATABIAS R345 24.9_F 0402
HDA_CODEC_SDATAIN0
HDA_MDC_SDATAIN1
HDA_HDMI_SDATAIN2
IHDA_BITCLK
IHDA_SYNC
IHDA_RESET#
IHDA_SDATAO
HDA_DOCK_EN#
HDA_DOCK_RST#
HDD_LED#
SATA_RXN0
SATA_RXP0
SATA_TXN0
SATA_TXP0
SATA_RXN1
SATA_RXP1
SATA_TXN1
SATA_TXP1
TP143 20MIL
TP138 20MIL
R696 HD_33_J 0402 HDA_HDMI_BITCLK 8
R581 33_J 0402 HDA_MDC_BITCLK 39
R583 33_J 0402 HDA_CODEC_BITCLK 30
For Cantiga Internal HDMI
R697 HD_33_J 0402 HDA_HDMI_SDATAOUT 8
R582 33_J 0402 HDA_MDC_SDATAOUT 39
R584 33_J 0402 HDA_CODEC_SDATAOUT 30
R698 HD_33_J 0402 HDA_HDMI_RST# 8
R347 33_J 0402 HDA_MDC_RST# 39
R348 33_J 0402 HDA_CODEC_RST# 30,33
8 HDA_HDMI_SYNC
39 HDA_MDC_SYNC
30 HDA_CODEC_SYNC
R699 HD_33_J 0402
R351 33_J 0402
R349 33_J 0402
IHDA_SYNC
+V3.3S_1.5S_HDA_IO
R579 NC_1K_J 0402
FOXCONN
HON HAI Precision Ind. Co., Ltd.
CCPBG - R&D Division
Title ICH9-M(LPC,IDE,SATA) 2/5
Size A3
Document Number M850-1-02
Rev 1.1
Date: Friday, April 17, 2009
Sheet 20 of 60

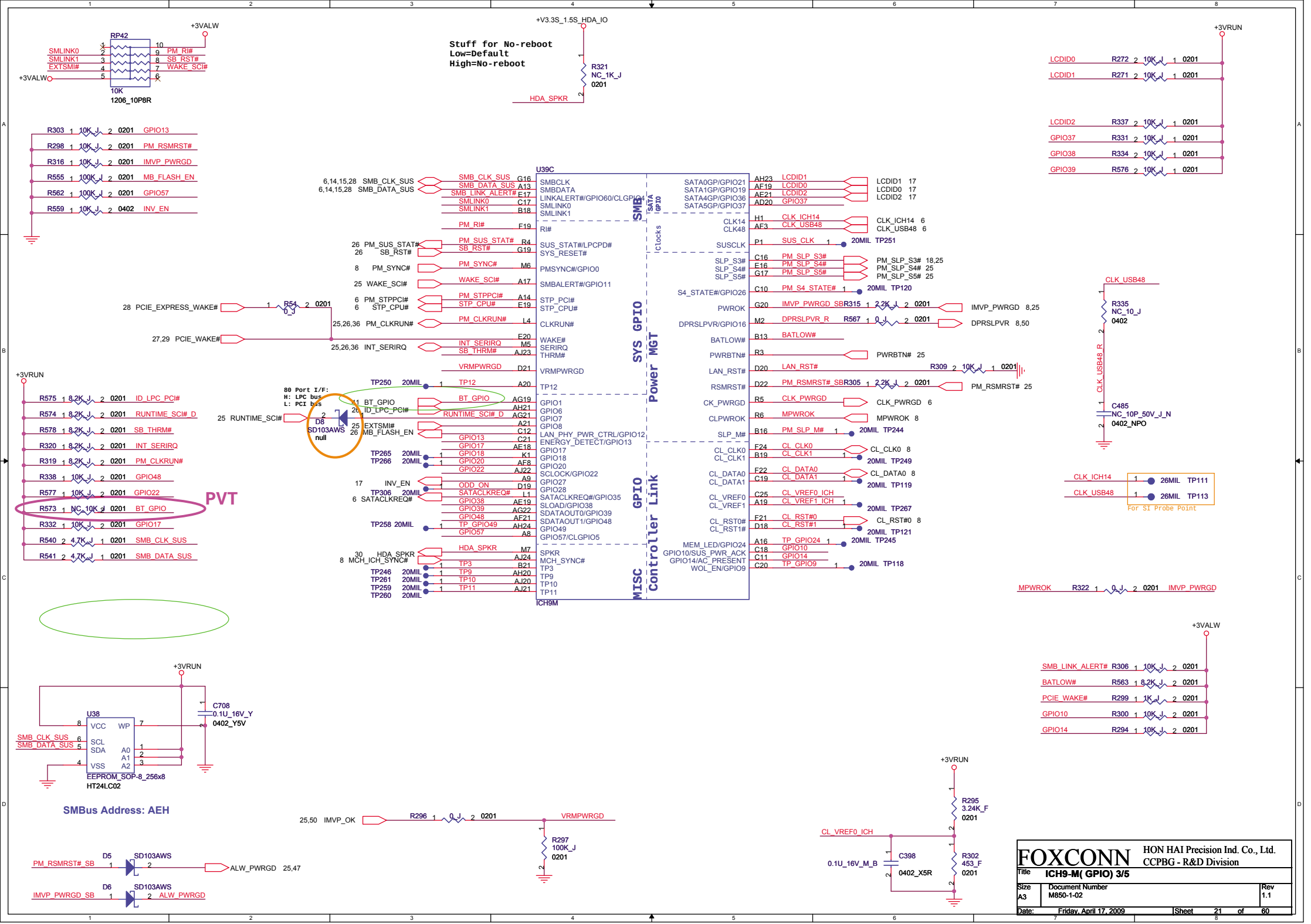
RP42
+3VALW
SMLINK0
SMLINK1
EXTSMI#
PM_RI#
SB_RST#
WAKE_SCI#
10K
1206_10P8R
+V3.3S_1.5S_HDA_IO
Stuff for No-reboot
Low=Default
High=No-reboot
R321
NC_1K_J
0201
HDA_SPKR
+3VRUN
LCDID0
LCDID1
LCDID2
GPIO37
GPIO38
GPIO39
R303
R298
R316
R555
R562
R559
GPIO13
PM_RSMRST#
IMVP_PWRGD
MB_FLASH_EN
GPIO57
INV_EN
U39C
SMBCLK
SMBDATA
LINKALERT#/GPIO60/CLGPIO4
SMLINK0
SMLINK1
RI#
SUS_STAT#/LPCPD#
SYS_RESET#
PMSYNC#/GPIO0
SMBALERT#/GPIO11
STP_PCI#
STP_CPU#
CLKRUN#
WAKE#
SERIRQ
THRM#
VRMPWRGD
TP12
GPIO1
GPIO6
GPIO7
GPIO8
LAN_PHY_PWR_CTRL/GPIO12
ENERGY_DETECT/GPIO13
GPIO17
GPIO18
GPIO20
SCLOCK/GPIO22
GPIO27
GPIO28
SATACLKREQ#/GPIO35
SLOAD/GPIO38
SDATAOUT0/GPIO39
SDATAOUT1/GPIO48
GPIO49
GPIO57/CLGPIO5
SPKR
MCH_SYNC#
TP3
TP9
TP10
TP11
ICH9M
SMB
SATA GPIO
Clocks
SYS GPIO
Power MGT
GPIO
Controller Link
MISC
SATA0GP/GPIO21
SATA1GP/GPIO19
SATA4GP/GPIO36
SATA5GP/GPIO37
CLK14
CLK48
SUSCLK
SLP_S3#
SLP_S4#
SLP_S5#
S4_STATE#/GPIO26
PWROK
DPRSLPVR/GPIO16
BATLOW#
PWRBTN#
LAN_RST#
RSMRST#
CK_PWRGD
CLPWROK
SLP_M#
CL_CLK0
CL_CLK1
CL_DATA0
CL_DATA1
CL_VREF0
CL_VREF1
CL_RST0#
CL_RST1#
MEM_LED/GPIO24
GPIO10/SUS_PWR_ACK
GPIO14/AC_PRESENT
WOL_EN/GPIO9
6,14,15,28 SMB_CLK_SUS
6,14,15,28 SMB_DATA_SUS
SMB_LINK_ALERT#
PM_SUS_STAT#
SB_RST#
PM_SYNC#
WAKE_SCI#
PM_STPPCI#
STP_CPU#
PM_CLKRUN#
INT_SERIRQ
SB_THRM#
TP250 20MIL
BT_GPIO
ID_LPC_PCI#
RUNTIME_SCI#
EXTSMI#
SMB_FLASH_EN
GPIO13
GPIO17
GPIO18
GPIO20
GPIO22
TP265 20MIL
TP266 20MIL
INV_EN
ODD_ON
TP306 20MIL
SATACLKREQ#
GPIO38
GPIO39
GPIO48
TP258 20MIL
TP_GPIO49
GPIO57
HDA_SPKR
MCH_ICH_SYNC#
TP3
TP9
TP10
TP11
TP246 20MIL
TP261 20MIL
TP259 20MIL
TP260 20MIL
28 PCIE_EXPRESS_WAKE#
R54 0_J 0201
25,26,36 PM_CLKRUN#
27,29 PCIE_WAKE#
25,26,36 INT_SERIRQ
80 Port I/F:
H: LPC bus
L: PCI bus
25 RUNTIME_SCI#
D8
SD103AWS
null
R575 8.2K_J 0201 ID_LPC_PCI#
R574 8.2K_J 0201 RUNTIME_SCI#_D
R578 8.2K_J 0201 SB_THRM#
R320 8.2K_J 0201 INT_SERIRQ
R319 8.2K_J 0201 PM_CLKRUN#
R338 10K_J 0201 GPIO48
R577 10K_J 0201 GPIO22
R573 NC_10K_J 0201 BT_GPIO
R332 10K_J 0201 GPIO17
R540 4.7K_J 0201 SMB_CLK_SUS
R541 4.7K_J 0201 SMB_DATA_SUS
PVT
SATA0GP/GPIO21 AH23 LCDID1
SATA1GP/GPIO19 AF19 LCDID0
SATA4GP/GPIO36 AF21 LCDID2
SATA5GP/GPIO37 AD20 GPIO37
CLK14 H1 CLK_ICH14
CLK48 AF3 CLK_USB48
SUSCLK P1 SUS_CLK 20MIL TP251
SLP_S3# C16 PM_SLP_S3#
SLP_S4# E16 PM_SLP_S4#
SLP_S5# G17 PM_SLP_S5#
S4_STATE#/GPIO26 C10 PM_S4_STATE# 20MIL TP120
PWROK G20 IMVP_PWRGD_SB R315 2.2K_J 0201 IMVP_PWRGD 8,25
DPRSLPVR/GPIO16 M2 DPRSLPVR_R R567 0_J 0201 DPRSLPVR 8,50
BATLOW# B13 BATLOW#
PWRBTN# R3 PWRBTN# 25
LAN_RST# D20 LAN_RST# R309 10K_J 0201
RSMRST# D22 PM_RSMRST#_SB R305 2.2K_J 0201 PM_RSMRST# 25
CK_PWRGD R5 CLK_PWRGD CLK_PWRGD 6
CLPWROK R6 MPWROK MPWROK 8
SLP_M# B16 PM_SLP_M# 20MIL TP244
CL_CLK0 F24 CL_CLK0 CL_CLK0 8
CL_CLK1 B19 CL_CLK1 20MIL TP249
CL_DATA0 F22 CL_DATA0 CL_DATA0 8
CL_DATA1 C19 CL_DATA1 20MIL TP119
CL_VREF0 C25 CL_VREF0_ICH
CL_VREF1 A19 CL_VREF1_ICH 20MIL TP267
CL_RST0# F21 CL_RST#0 CL_RST0 8
CL_RST1# D18 CL_RST#1 20MIL TP121
MEM_LED/GPIO24 A16 TP_GPIO24 20MIL TP245
GPIO10/SUS_PWR_ACK C18 GPIO10
GPIO14/AC_PRESENT C11 GPIO14
WOL_EN/GPIO9 C20 TP_GPIO9 20MIL TP118
CLK_USB48
R335 NC_10_J 0402
CLK_USB48_R
C485 NC_10P_50V_J_N 0402_NPO
CLK_ICH14 26MIL TP111
CLK_USB48 26MIL TP113
For SI Probe Point
MPWROK R322 0_J 0201 IMVP_PWRGD
+3VALW
SMB_LINK_ALERT# R306 10K_J 0201
BATLOW# R563 8.2K_J 0201
PCIE_WAKE# R299 1K_J 0201
GPIO10 R300 10K_J 0201
GPIO14 R294 10K_J 0201
+3VRUN
U38
VCC
WP
SCL
SDA
A0
A1
A2
VSS
C708 0.1U_16V_Y 0402_Y5V
SMB_CLK_SUS
SMB_DATA_SUS
EEPROM_SOP-8_256x8
HT24LC02
SMBus Address: AEH
25,50 IMVP_OK
R296 0_J 0201
VRMPWRGD
R297 100K_J 0201
D5 SD103AWS
PM_RSMRST#_SB
ALW_PWRGD 25,47
D6 SD103AWS
IMVP_PWRGD_SB
ALW_PWRGD
+3VRUN
R295 3.24K_F 0201
CL_VREF0_ICH
C398 0.1U_16V_M_B 0402_X5R
R302 453_F 0201
FOXCONN
HON HAI Precision Ind. Co., Ltd.
CCPBG - R&D Division
Title ICH9-M(GPIO) 3/5
Size A3
Document Number M850-1-02
Rev 1.1
Date: Friday, April 17, 2009
Sheet 21 of 60

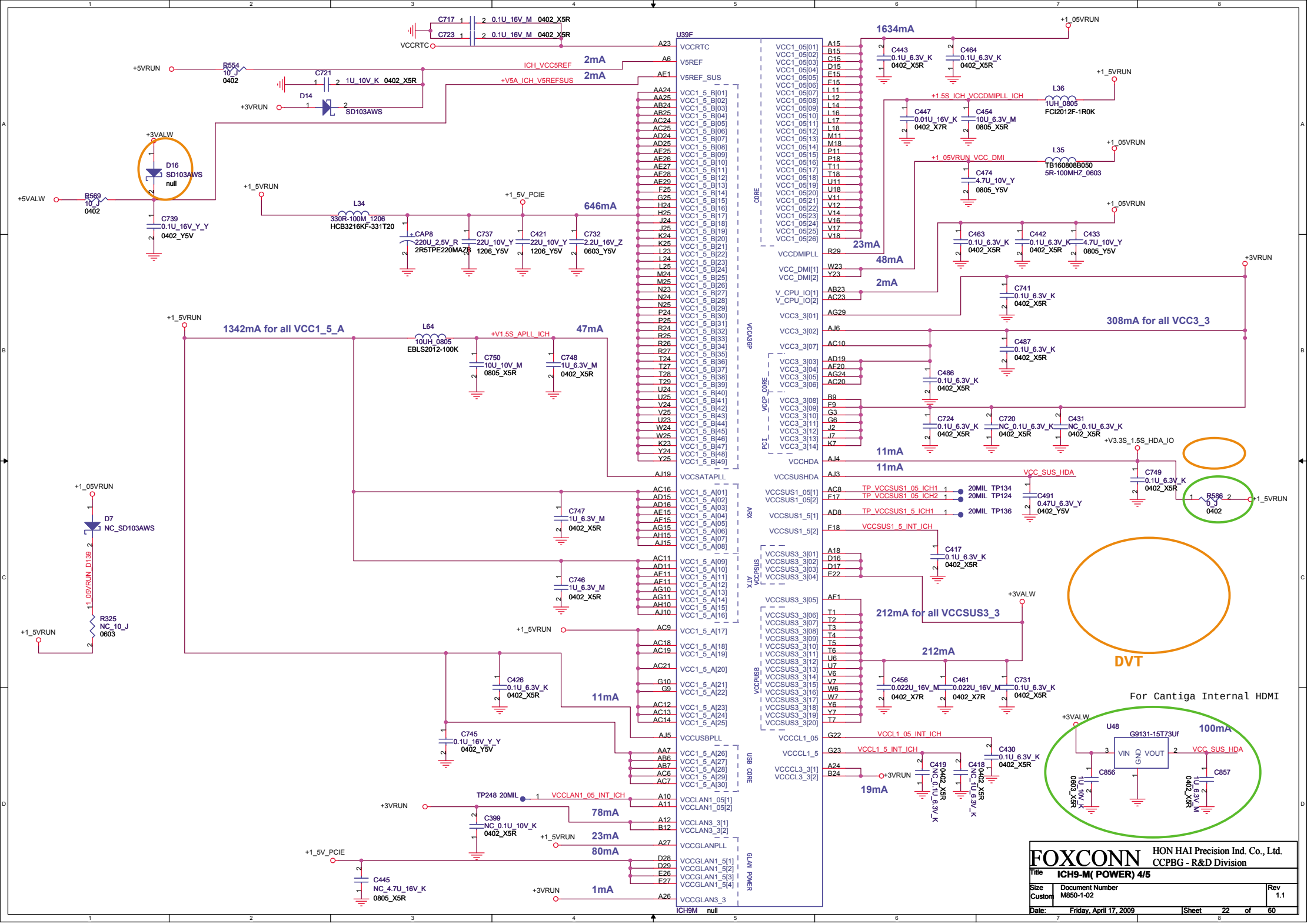
U39F
ICH9M null
VCCRTC
V5REF
V5REF_SUS
CORE
VCCA3GP
VCCP CORE
PCI
RTC
DMI
VCCSUS3_3
VCCPSUS
ATX
VCCPUSB
USB CORE
VCCLAN1_05
VCCLAN3_3
VCCGLANPLL
GLAN POWER
VCCSATAPLL
ARX
VCCUSBPLL
VCCCL1_05
VCCCL3_3
C717 0.1U_16V_M_0402_X5R
C723 0.1U_16V_M_0402_X5R
ICH_VCC5REF
+V5A_ICH_V5REFSUS
R554 10_J 0402
C721 1U_10V_K_0402_X5R
D14 SD103AWS
D16 SD103AWS null
R569 10_J 0402
C739 0.1U_16V_Y_Y 0402_Y5V
L34 330R-100M_1206 HCB3216KF-331T20
+CAP8 220U_2.5V_R 2R5TPE220MAZ8
C737 22U_10V_Y 1206_Y5V
C421 22U_10V_Y 1206_Y5V
C732 2.2U_16V_Z 0603_Y5V
646mA
1342mA for all VCC1_5_A
L64 10UH_0805 EBLS2012-100K
+V1.5S_APLL_ICH
47mA
C750 10U_10V_M 0805_X5R
C748 1U_6.3V_M 0402_X5R
C747 1U_6.3V_M 0402_X5R
C746 1U_6.3V_M 0402_X5R
D7 NC_SD103AWS
R325 NC_10_J 0603
11mA
C426 0.1U_6.3V_K 0402_X5R
C745 0.1U_16V_Y_Y 0402_Y5V
TP248 20MIL
VCCLAN1_05_INT_ICH
78mA
C399 NC_0.1U_10V_K 0402_X5R
23mA
80mA
C445 NC_4.7U_16V_K 0805_X5R
1mA
1634mA
C443 0.1U_6.3V_K 0402_X5R
C464 0.1U_6.3V_K 0402_X5R
+1.5S_ICH_VCCDMIPLL_ICH
L36 1UH_0805 FCI2012F-1R0K
C447 0.01U_16V_K 0402_X7R
C454 10U_6.3V_M 0805_X5R
+1_05VRUN_VCC_DMI
L35 TB160808B050 5R-100MHZ_0603
C474 4.7U_10V_Y 0805_Y5V
23mA
48mA
2mA
C463 0.1U_6.3V_K 0402_X5R
C442 0.1U_6.3V_K 0402_X5R
C433 4.7U_10V_Y 0805_Y5V
C741 0.1U_6.3V_K 0402_X5R
308mA for all VCC3_3
C487 0.1U_6.3V_K 0402_X5R
C486 0.1U_6.3V_K 0402_X5R
C724 0.1U_6.3V_K 0402_X5R
C720 NC_0.1U_6.3V_K 0402_X5R
C431 NC_0.1U_6.3V_K 0402_X5R
+V3.3S_1.5S_HDA_IO
11mA
11mA
VCC_SUS_HDA
C749 0.1U_6.3V_K 0402_X5R
C491 0.47U_6.3V_Y 0402_Y5V
R586 0_J 0402
TP_VCCSUS1_05_ICH1
TP_VCCSUS1_05_ICH2
TP_VCCSUS1_5_ICH1
20MIL TP134
20MIL TP124
20MIL TP136
VCCSUS1_5_INT_ICH
C417 0.1U_6.3V_K 0402_X5R
212mA for all VCCSUS3_3
212mA
C456 0.022U_16V_M 0402_X7R
C461 0.022U_16V_M 0402_X7R
C731 0.1U_6.3V_K 0402_X5R
VCCL1_05_INT_ICH
VCCL1_5_INT_ICH
C430 0.1U_6.3V_K 0402_X5R
C419 NC_0.1U_6.3V_K 0402_X5R
C418 NC_1U_6.3V_K 0402_X5R
19mA
DVT
For Cantiga Internal HDMI
U48 G9131-15T73Uf
100mA
VIN GND VOUT
C856 1U_10V_K 0603_X5R
C857 1U_6.3V_M 0402_X5R
FOXCONN
HON HAI Precision Ind. Co., Ltd.
CCPBG - R&D Division
Title ICH9-M(POWER) 4/5
Size Custom
Document Number M850-1-02
Rev 1.1
Date: Friday, April 17, 2009
Sheet 22 of 60

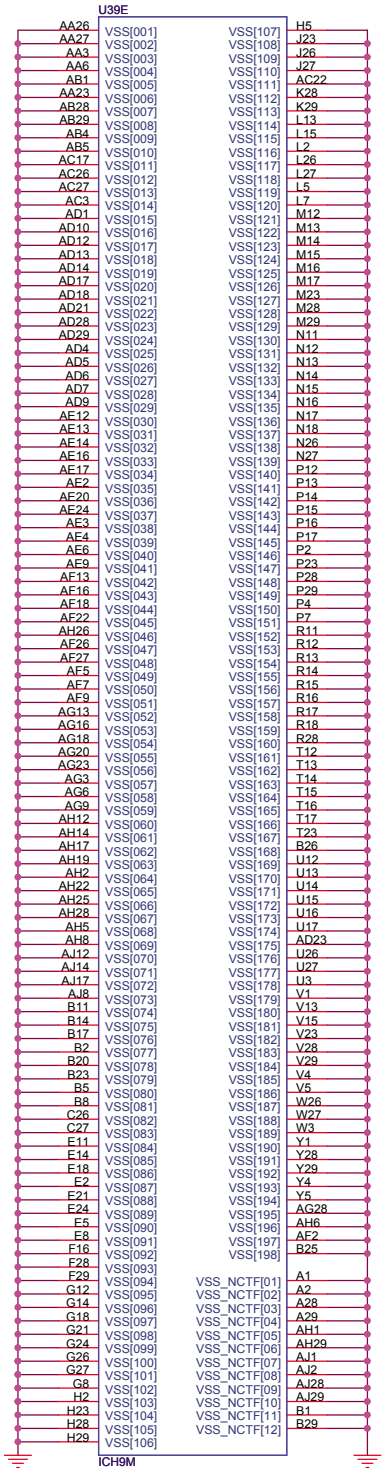

FOXCONN	HON HAI Precision Ind. Co., Ltd. CCPBG - R&D Division	
Title	ICH9-M(GND) 5/5	
Size A3	Document Number M850-1-02	Rev 1.1
Date: Friday, April 17, 2009	Sheet 23 of 60	

SATA HDD CONN

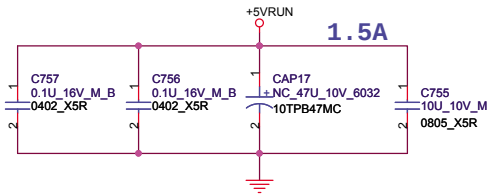

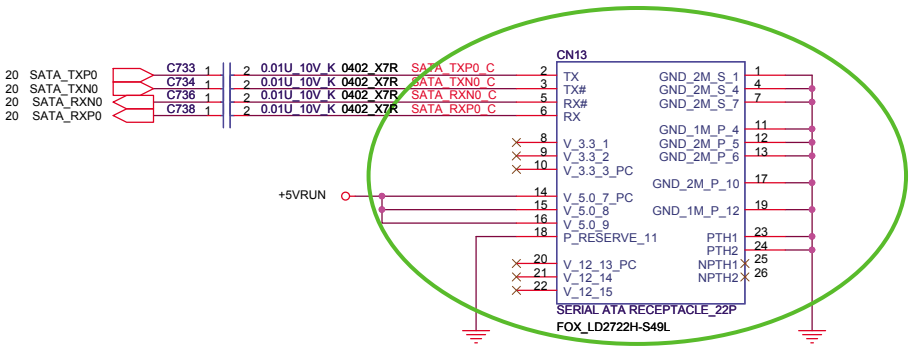

EVT

SATA ODD CONN

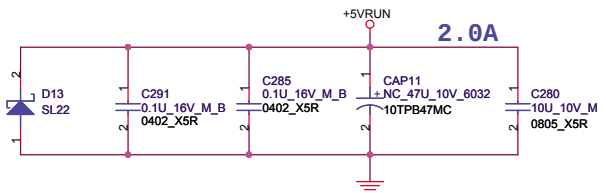

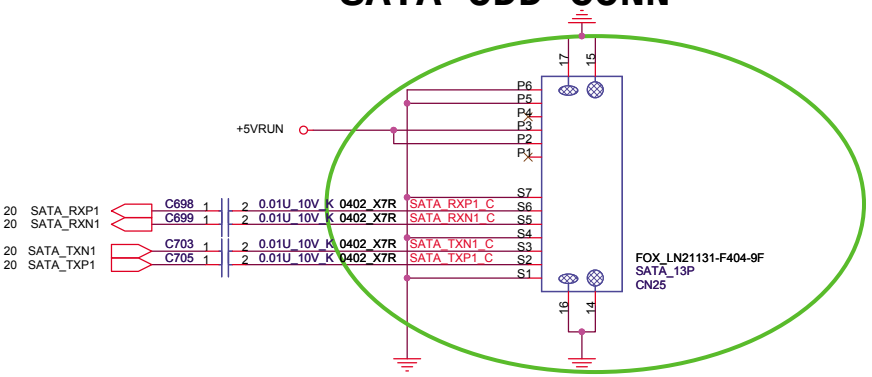

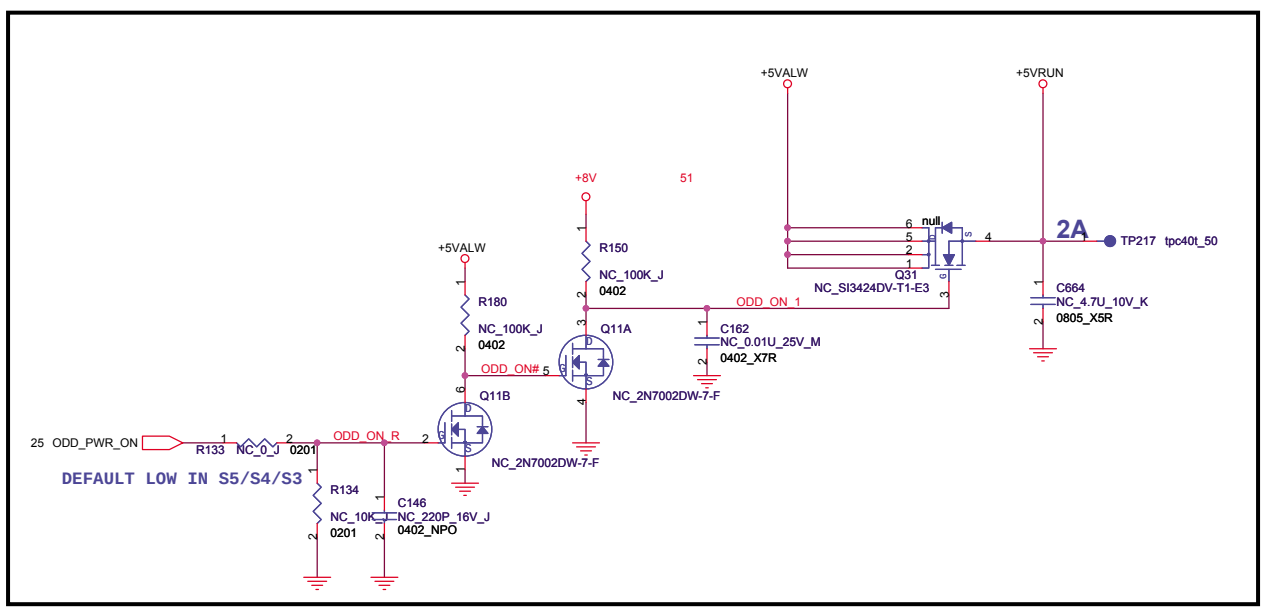

FOXCONN	HON HAI Precision Ind. Co., Ltd. CCPBG - R&D Division	
Title: SATA HDD/ODD		
Size: A3	Document Number: M850-1-02	Rev: 1.1
Date: Friday, April 17, 2009	Sheet 24 of 60	

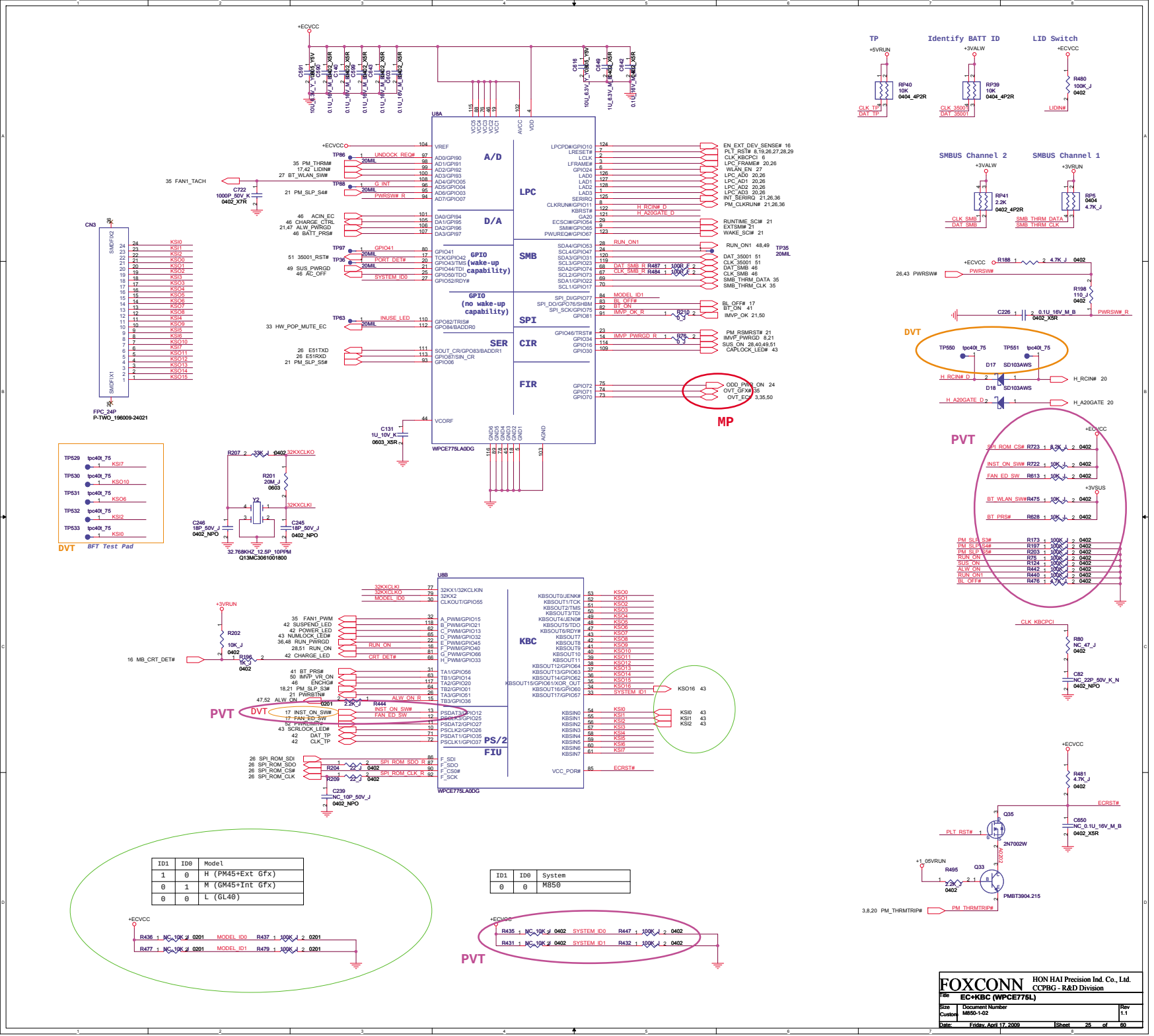

ID1	ID0	Model
1	0	H (PM45+Ext Gfx)
0	1	M (GM45+Int Gfx)
0	0	L (GL40)

ID1	ID0	System
0	0	M850

Size: Custom	Document Number: M850-1-02	Rev: 1.1
Date: Friday, April 17, 2009	Sheet 25 of 60	

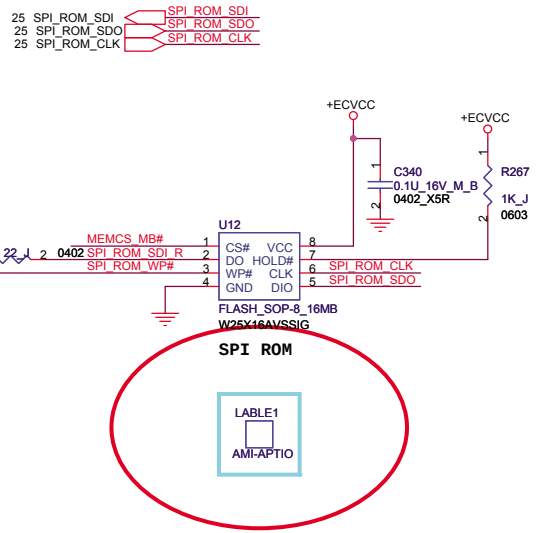

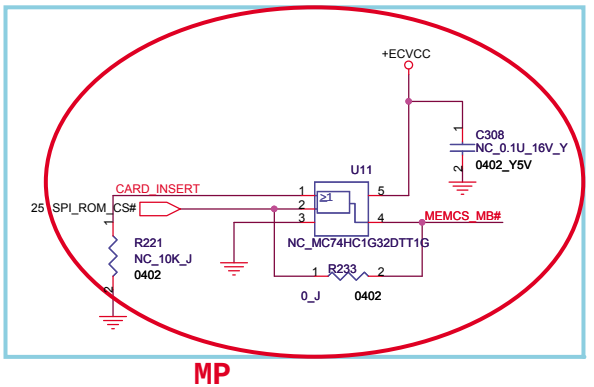

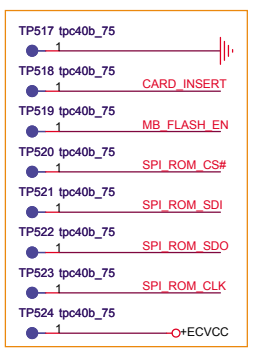

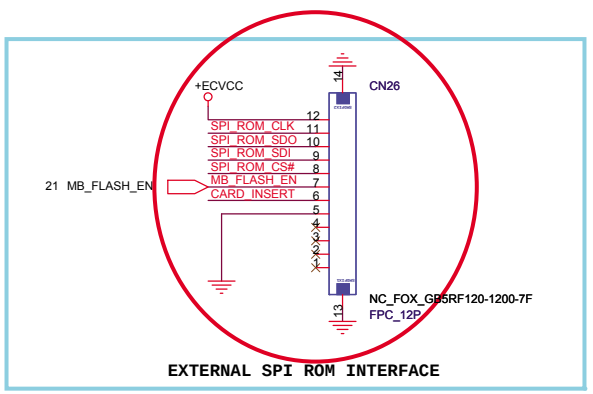

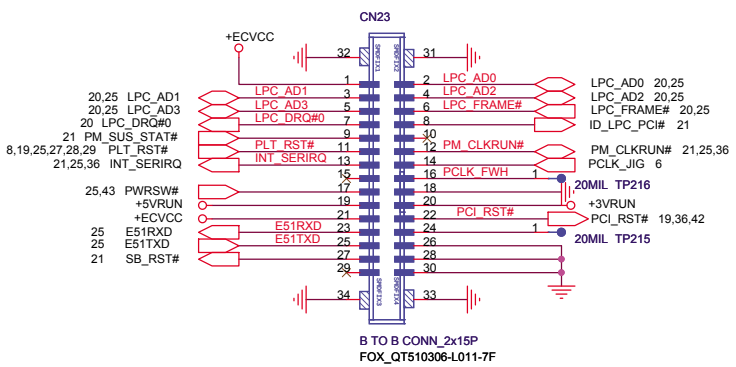

FOXCONN — HON HAI Precision Ind. Co., Ltd.
CCPBG - R&D Division

Title: Flash ROM/SPI		
Size: A3	Document Number: M850-1-02	Rev: 1.1
Date: Friday, April 17, 2009	Sheet 26 of 60	

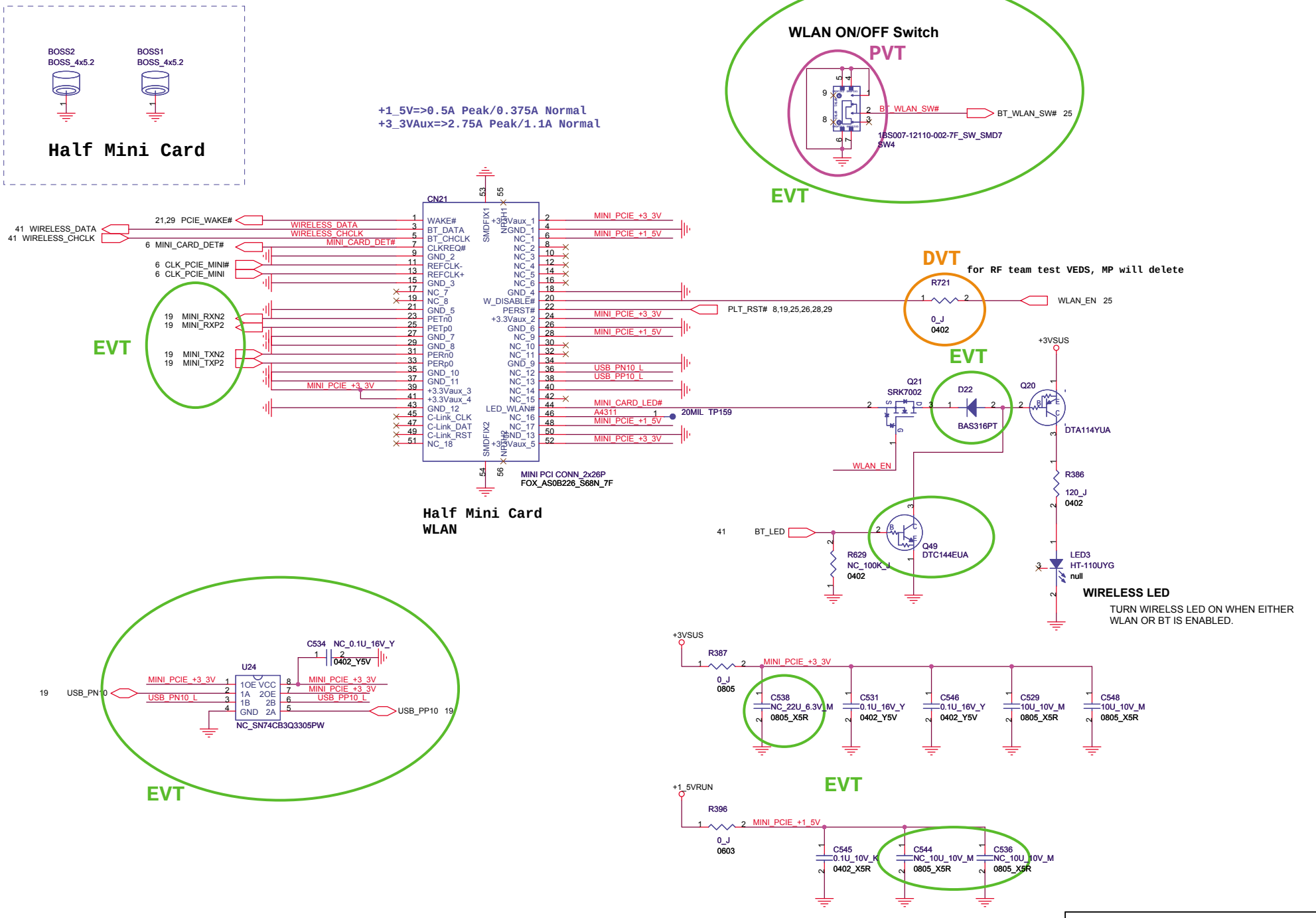

FOXCONN	HON HAI Precision Ind. Co., Ltd. CCPBG - R&D Division	
Title: Half Mini Card		
Size: A3	Document Number: M850-1-02	Rev: 1.1
Date: Friday, April 17, 2009	Sheet 27 of 60	

+1_5V=>1.3A
+3_3VAux=>0.6A
+3_3V=>2.5A

Express Card Power Switch

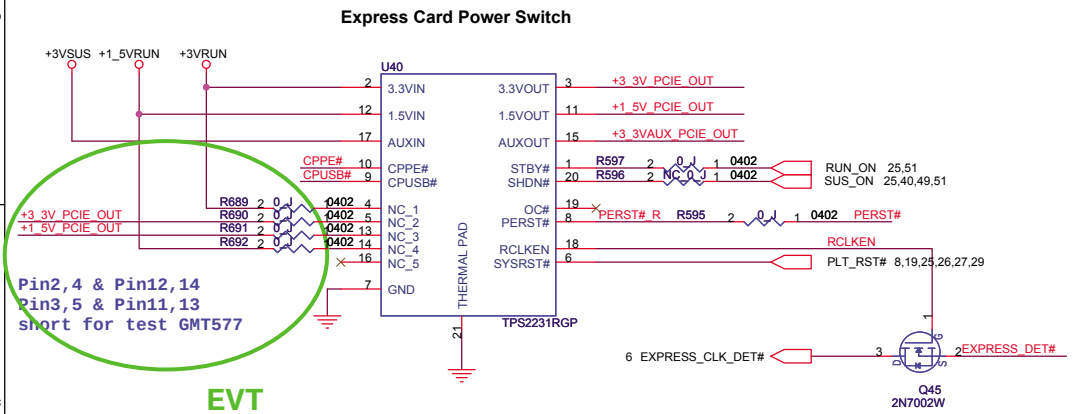

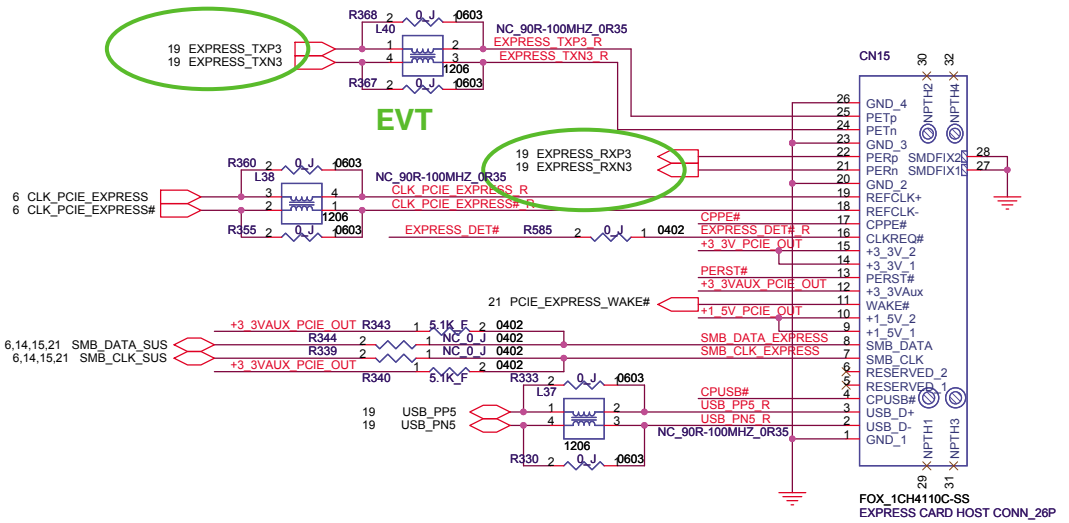

Express Card Slot.

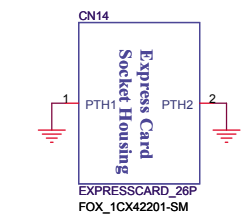

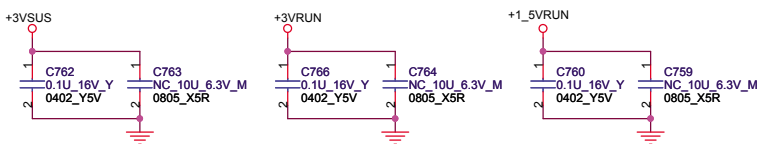

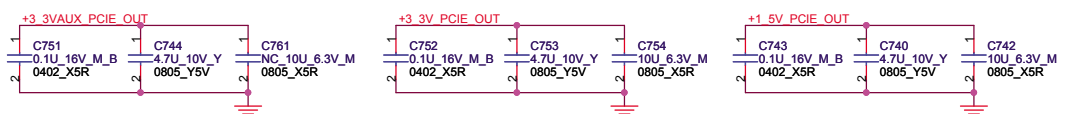

FOXCONN	HON HAI Precision Ind. Co., Ltd. CCPBG - R&D Division	
Title: EXPRESS CARD		
Size: A3	Document Number: M850-1-02	Rev: 1.1
Date: Friday, April 17, 2009	Sheet 28 of 60	

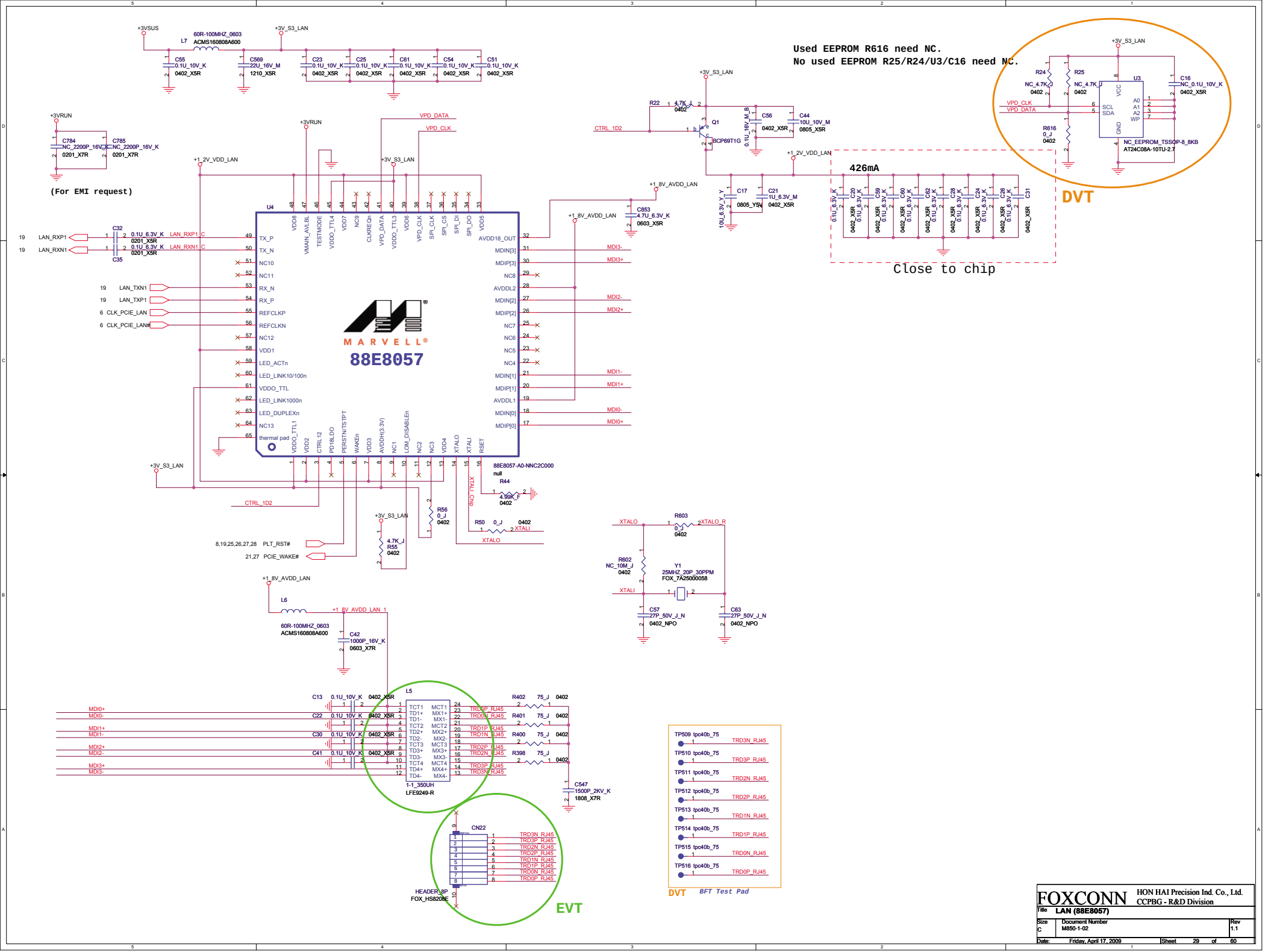

FOXCONN	HON HAI Precision Ind. Co., Ltd. CCPBG - R&D Division
Title	LAN (88E8057)
Size C	Document Number M850-1-02
Rev	1.1
Date:	Friday, April 17, 2009
Sheet	29 of 60

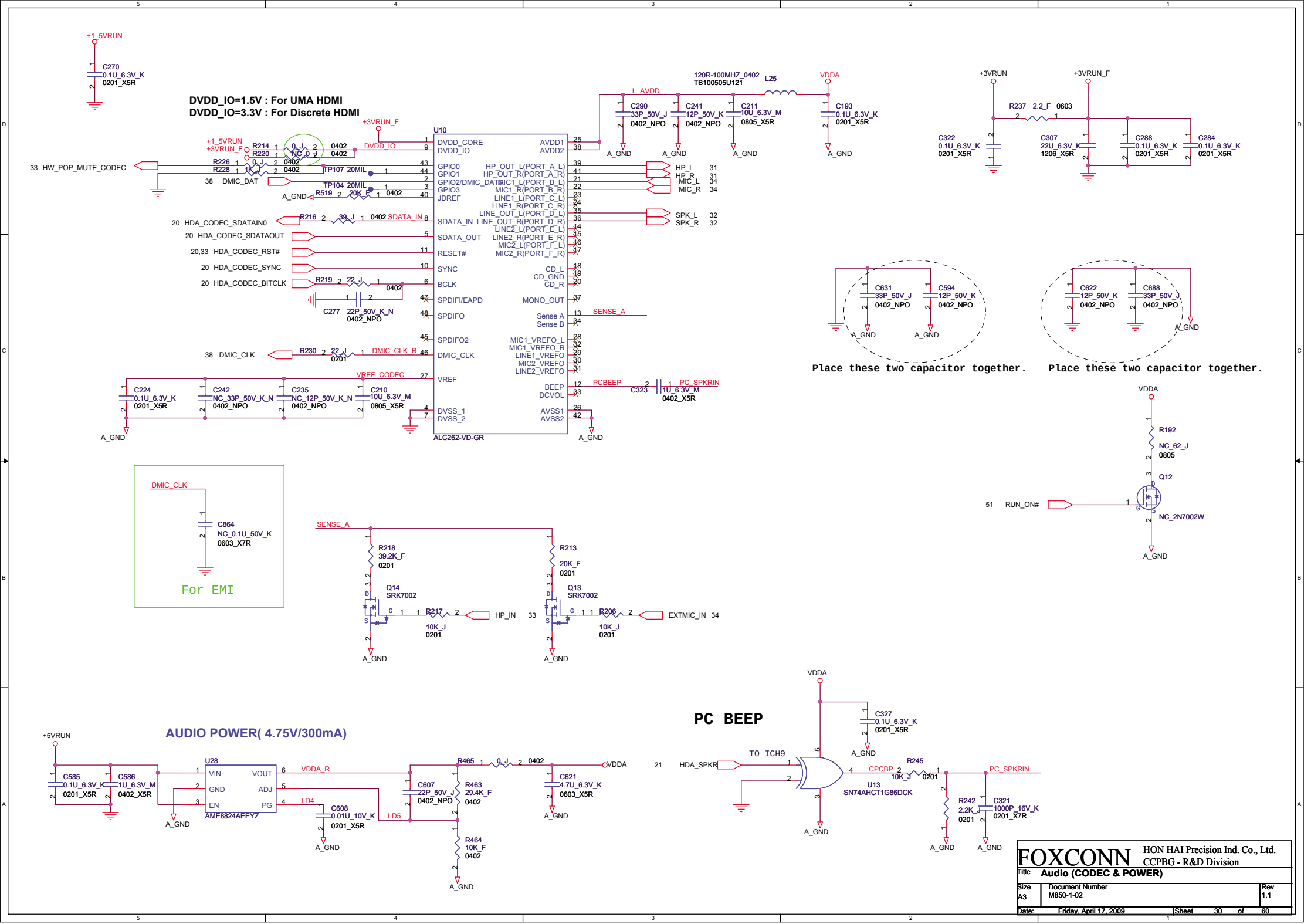
DVDD_IO=1.5V : For UMA HDMI
DVDD_IO=3.3V : For Discrete HDMI
U10
ALC262-VD-GR
Place these two capacitor together.
Place these two capacitor together.
For EMI
AUDIO POWER(4.75V/300mA)
PC BEEP
U28
AME8824AEEYZ
U13
SN74AHCT1G86DCK
Q14
SRK7002
Q13
SRK7002
Q12
NC_2N7002W
FOXCONN
HON HAI Precision Ind. Co., Ltd.
CCPBG - R&D Division
Title
Audio (CODEC & POWER)
Size
A3
Document Number
M850-1-02
Rev
1.1
Date:
Friday, April 17, 2009
Sheet
30
of
60

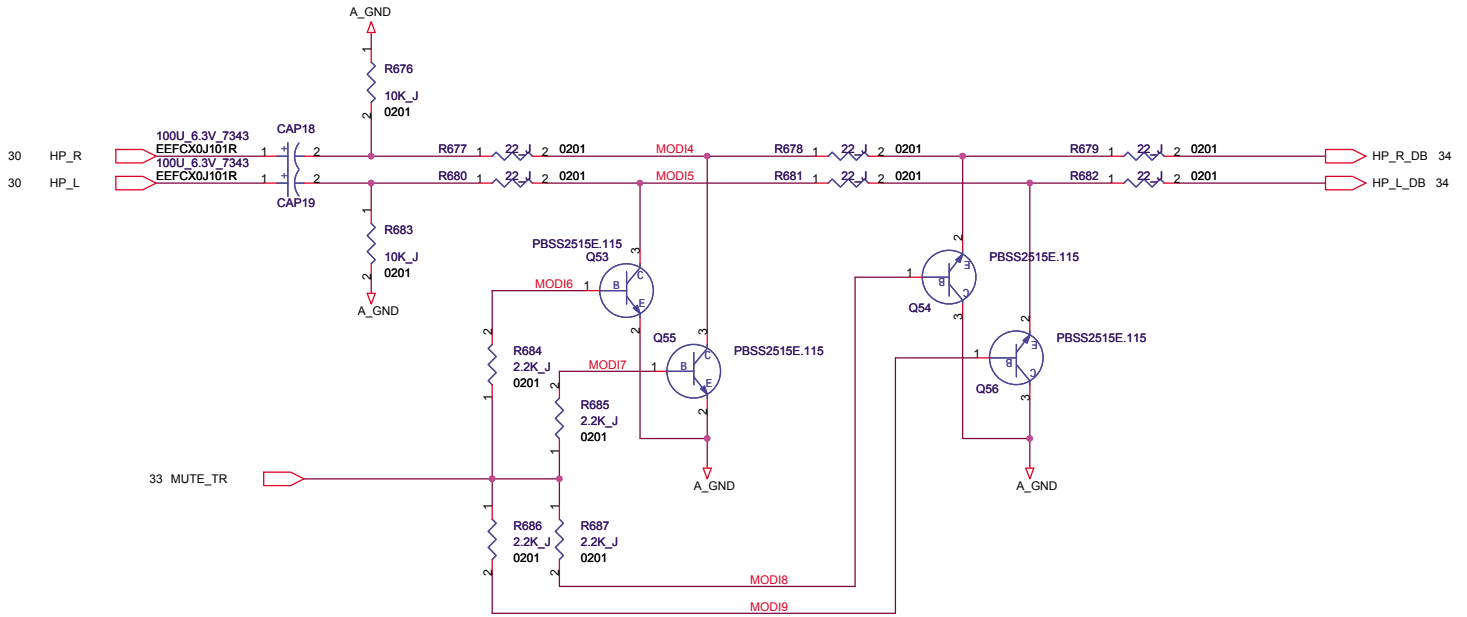

FOXCONN	HON HAI Precision Ind. Co., Ltd. CCPBG - R&D Division	
Title	Audio (HP)	
Size A3	Document Number M850-1-02	Rev 1.1
Date: Friday, April 17, 2009	Sheet 31 of 60	

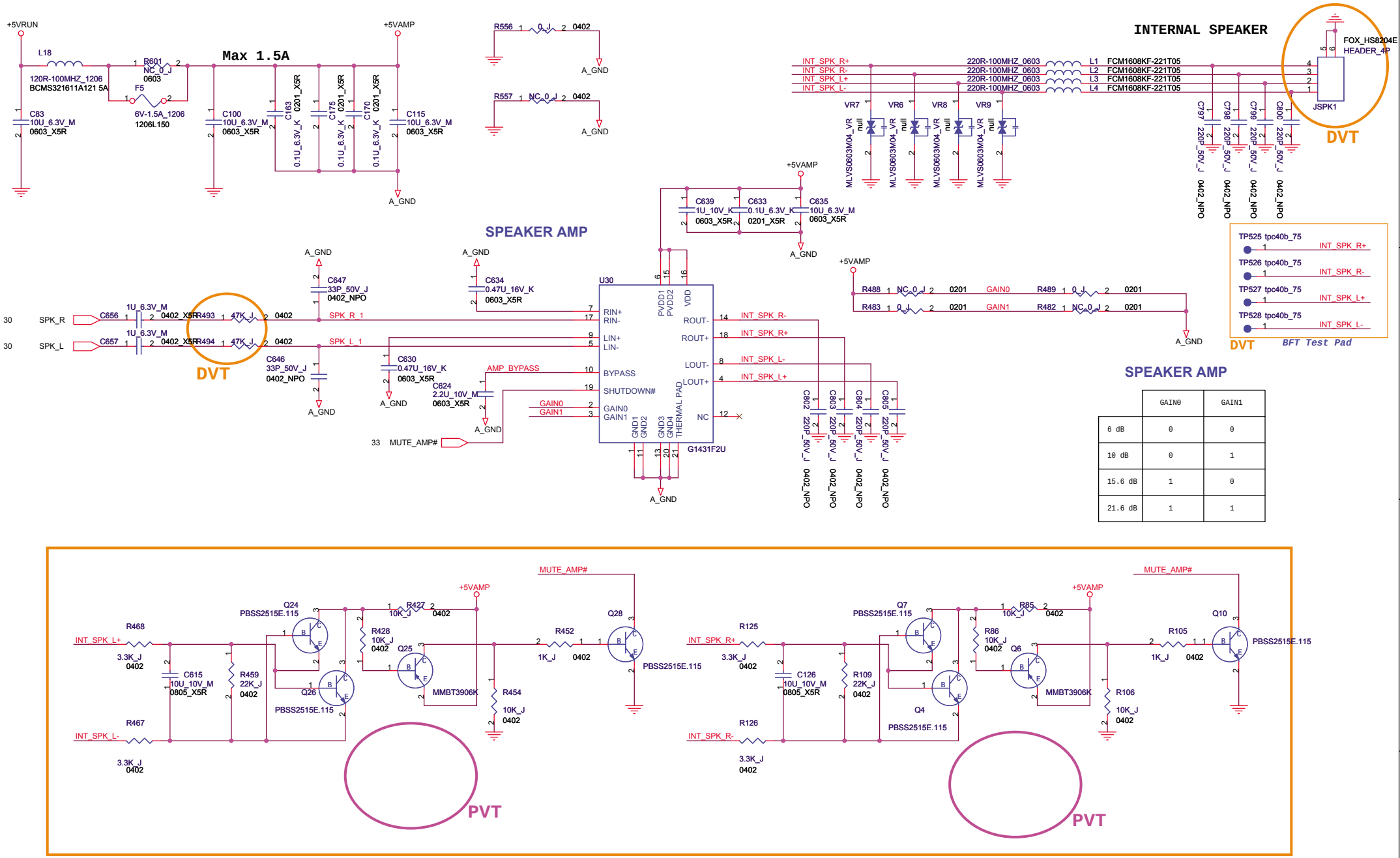
INTERNAL SPEAKER
SPEAKER AMP
Max 1.5A
+5VRUN
+5VAMP
A_GND
L18
120R-100MHZ_1206
BCMS321611A121 5A
R601
NC_0_J
0603
F5
6V-1.5A_1206
1206L150
C83
10U_6.3V_M
0603_X5R
C100
10U_6.3V_M
0603_X5R
C163
0201_X5R
0.1U_6.3V_K
C175
0201_X5R
0.1U_6.3V_K
C170
0201_X5R
0.1U_6.3V_K
C115
10U_6.3V_M
0603_X5R
R556
0_J
0402
R557
NC_0_J
0402
INT_SPK_R+
INT_SPK_R-
INT_SPK_L+
INT_SPK_L-
220R-100MHZ_0603
L1 FCM1608KF-221T05
L2 FCM1608KF-221T05
L3 FCM1608KF-221T05
L4 FCM1608KF-221T05
VR7
VR6
VR8
VR9
MLVS0603M04_VR
null
C797
C798
C799
C800
220P_50V_J
0402_NPO
FOX_HS8204E
HEADER_4P
JSPK1
DVT
C639
1U_10V_K
0603_X5R
C633
0.1U_6.3V_K
0201_X5R
C635
10U_6.3V_M
0603_X5R
TP525 tpc40b_75
TP526 tpc40b_75
TP527 tpc40b_75
TP528 tpc40b_75
BFT Test Pad
SPK_R
SPK_L
C656
C657
1U_6.3V_M
0402_X5R
R493
R494
47K_J
0402
C647
33P_50V_J
0402_NPO
C646
33P_50V_J
0402_NPO
SPK_R_1
SPK_L_1
C634
0.47U_16V_K
0603_X5R
C630
0.47U_16V_K
0603_X5R
C624
2.2U_10V_M
0603_X5R
AMP_BYPASS
GAIN0
GAIN1
MUTE_AMP#
U30
G1431F2U
RIN+
RIN-
LIN+
LIN-
BYPASS
SHUTDOWN#
GAIN0
GAIN1
GND1
GND2
GND3
GND4
THERMAL PAD
PVDD1
PVDD2
VDD
ROUT-
ROUT+
LOUT-
LOUT+
NC
R488
R483
R489
R482
0201
C802
C803
C804
C805
SPEAKER AMP
GAIN0
GAIN1
6 dB
10 dB
15.6 dB
21.6 dB
R468
R467
INT_SPK_L+
INT_SPK_L-
3.3K_J
0402
C615
10U_10V_M
0805_X5R
R459
22K_J
0402
Q24
PBSS2515E.115
Q26
PBSS2515E.115
R427
10K_J
0402
R428
10K_J
0402
Q25
MMBT3906K
R452
1K_J
0402
Q28
PBSS2515E.115
R454
10K_J
0402
PVT
R125
R126
INT_SPK_R+
INT_SPK_R-
C126
10U_10V_M
0805_X5R
R109
22K_J
0402
Q7
PBSS2515E.115
Q4
PBSS2515E.115
R85
10K_J
0402
R86
10K_J
0402
Q6
MMBT3906K
R105
1K_J
0402
Q10
PBSS2515E.115
R106
10K_J
0402
PVT
For Mor request,add the speaker cable short protection circuit
FOXCONN
HON HAI Precision Ind. Co., Ltd.
CCPBG - R&D Division
Title
Audio (SPKR)
Size
A3
Document Number
M850-1-02
Rev
1.1
Date:
Friday, April 17, 2009
Sheet
32
of
60

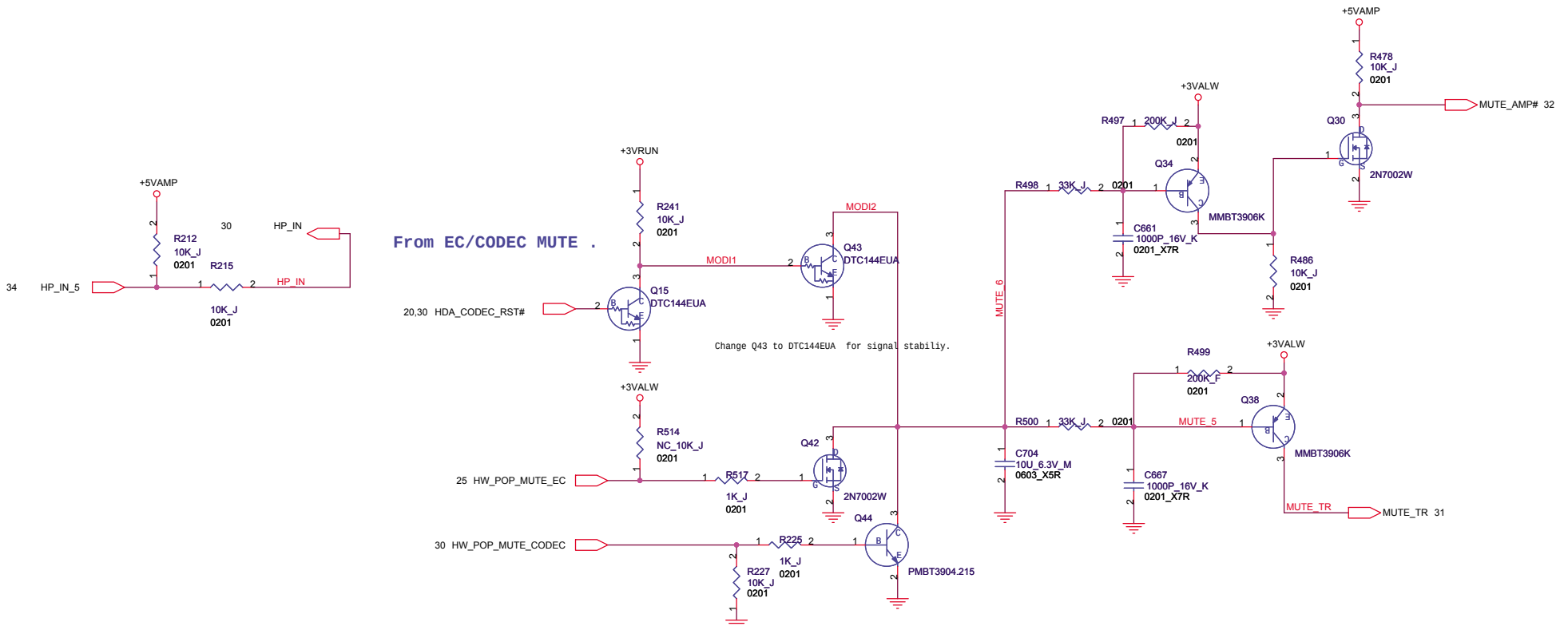

FOXCONN	HON HAI Precision Ind. Co., Ltd. CCPBG - R&D Division	
Title	Audio (MUTE)	
Size A3	Document Number M850-1-02	Rev 1.1
Date: Friday, April 17, 2009	Sheet 33 of 60	

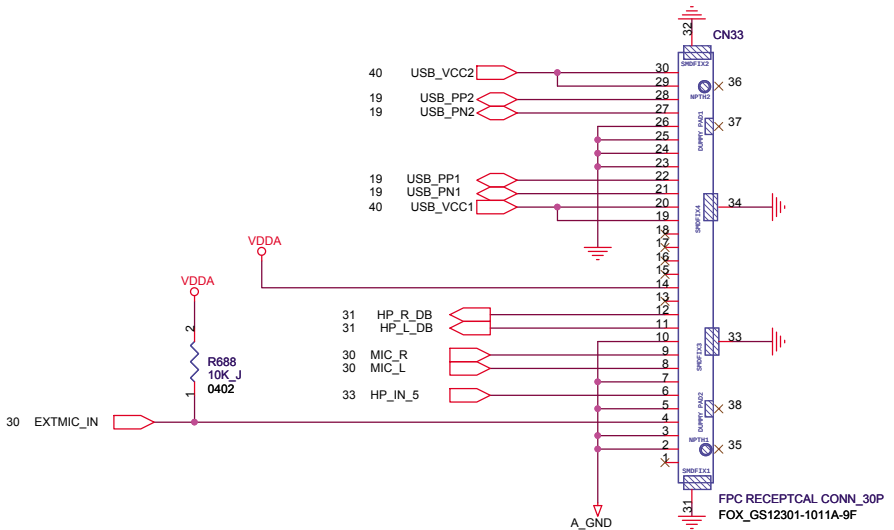

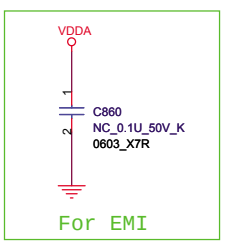

FOXCONN	HON HAI PRECISION IND. CO., LTD. CPBG - R&D Division	
Title	***Audio+USB MB CONN***	
Size A3	Document Number ***M850-1-02***	Rev ***1.1***
Date: Friday, April 17, 2009	Sheet 34 of 60	

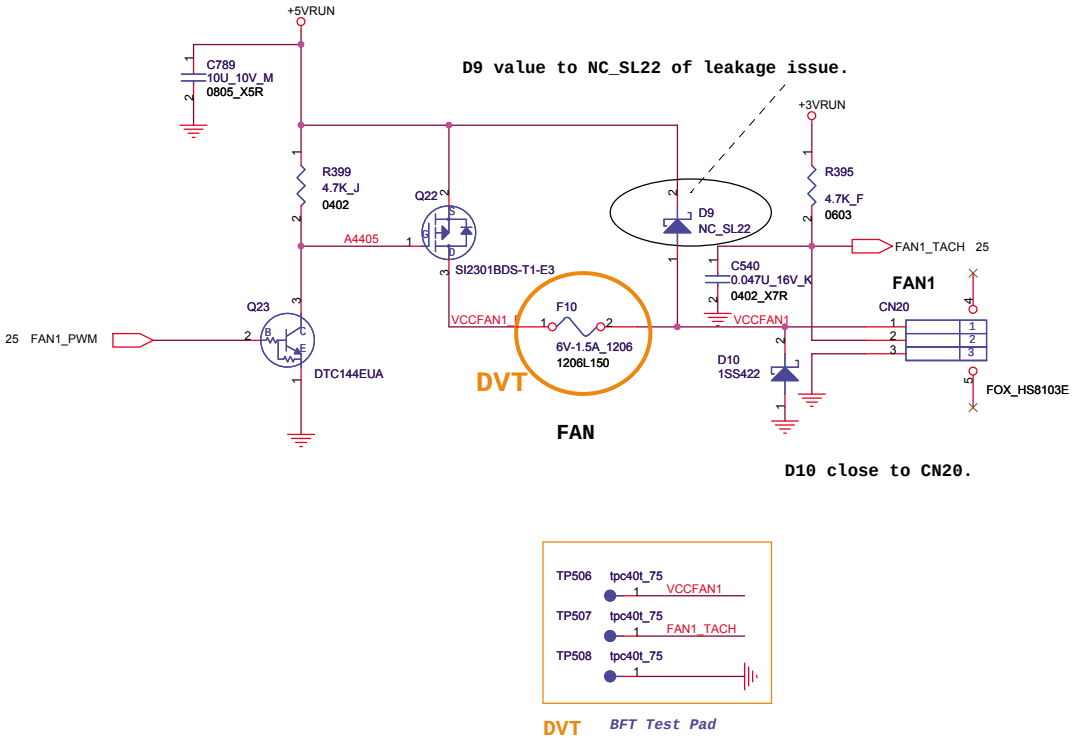

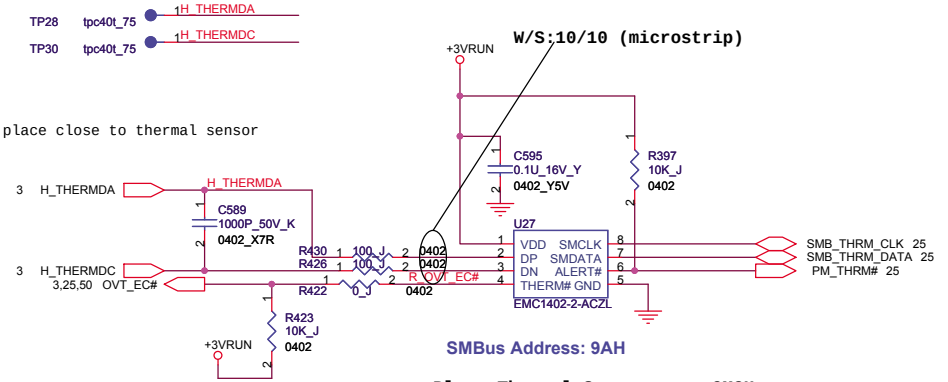

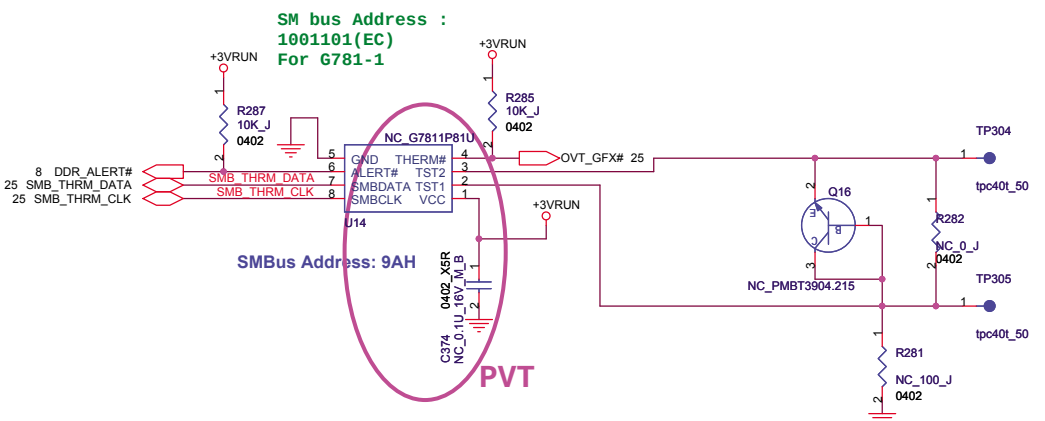

FOXCONN	HON HAI Precision Ind. Co., Ltd. CCPBG - R&D Division	
Title: FAN/Thermal		
Size: A3	Document Number: M850-1-02	Rev: 1.1
Date: Friday, April 17, 2009	Sheet 35 of 60	

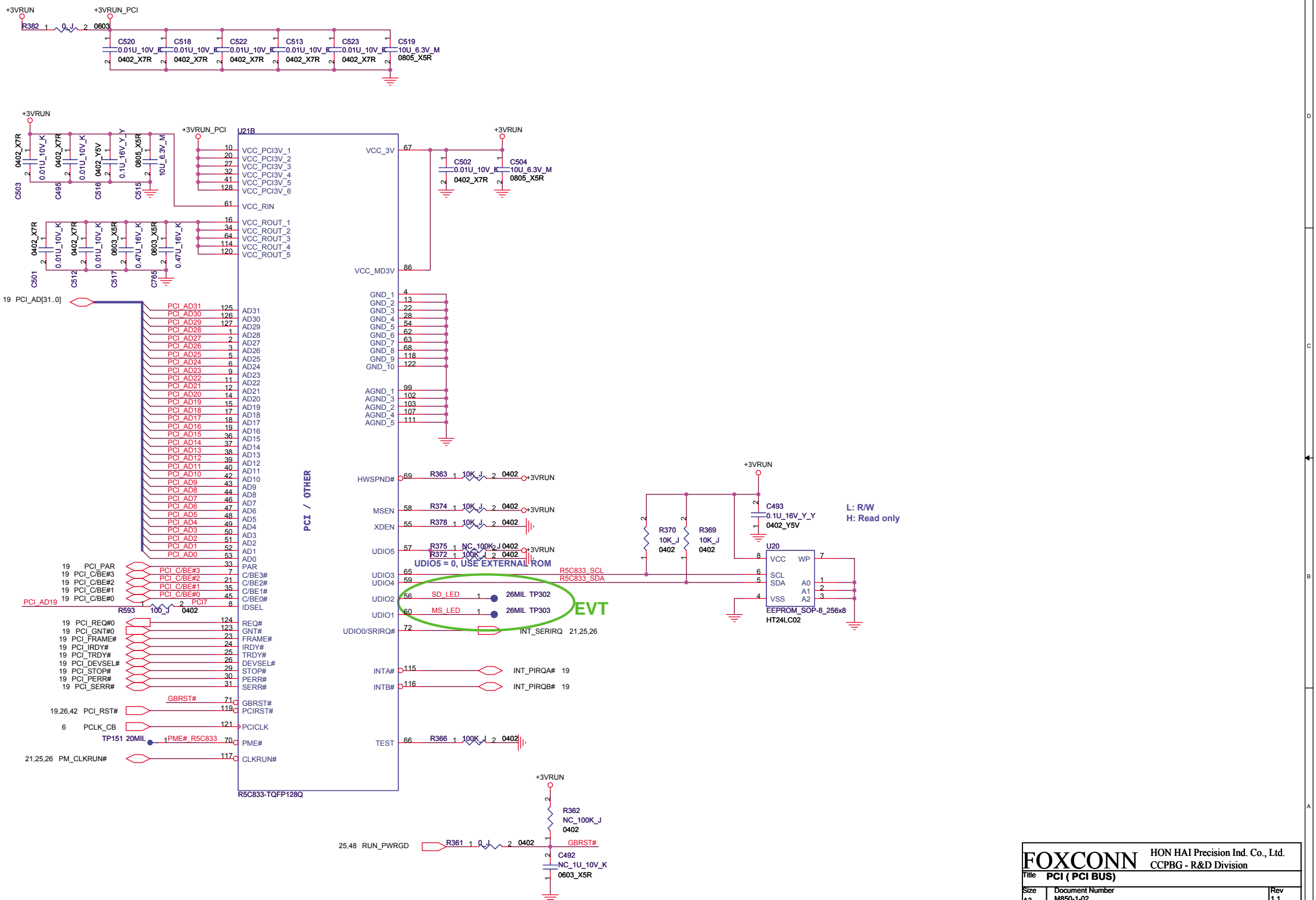

FOXCONN	HON HAI Precision Ind. Co., Ltd. CCPBG - R&D Division	
Title	PCI (PCI BUS)	
Size A3	Document Number M850-1-02	Rev 1.1
Date: Friday, April 17, 2009	Sheet 36 of 60	

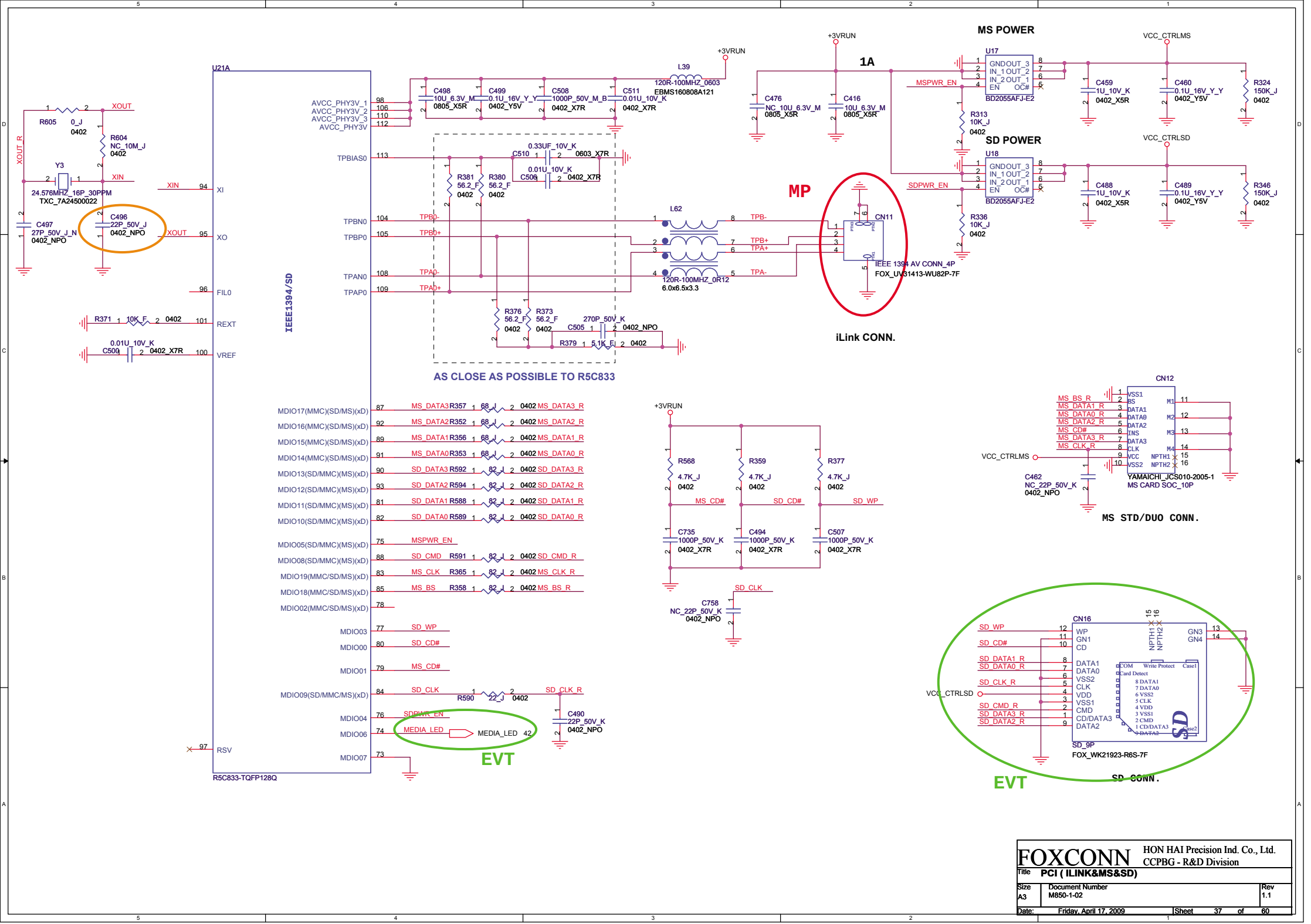

Company	FOXCONN — HON HAI Precision Ind. Co., Ltd. CCPBG - R&D Division
Title	PCI (ILINK&MS&SD)
Size	A3
Document Number	M850-1-02
Rev	1.1
Date	Friday, April 17, 2009
Sheet	37 of 60

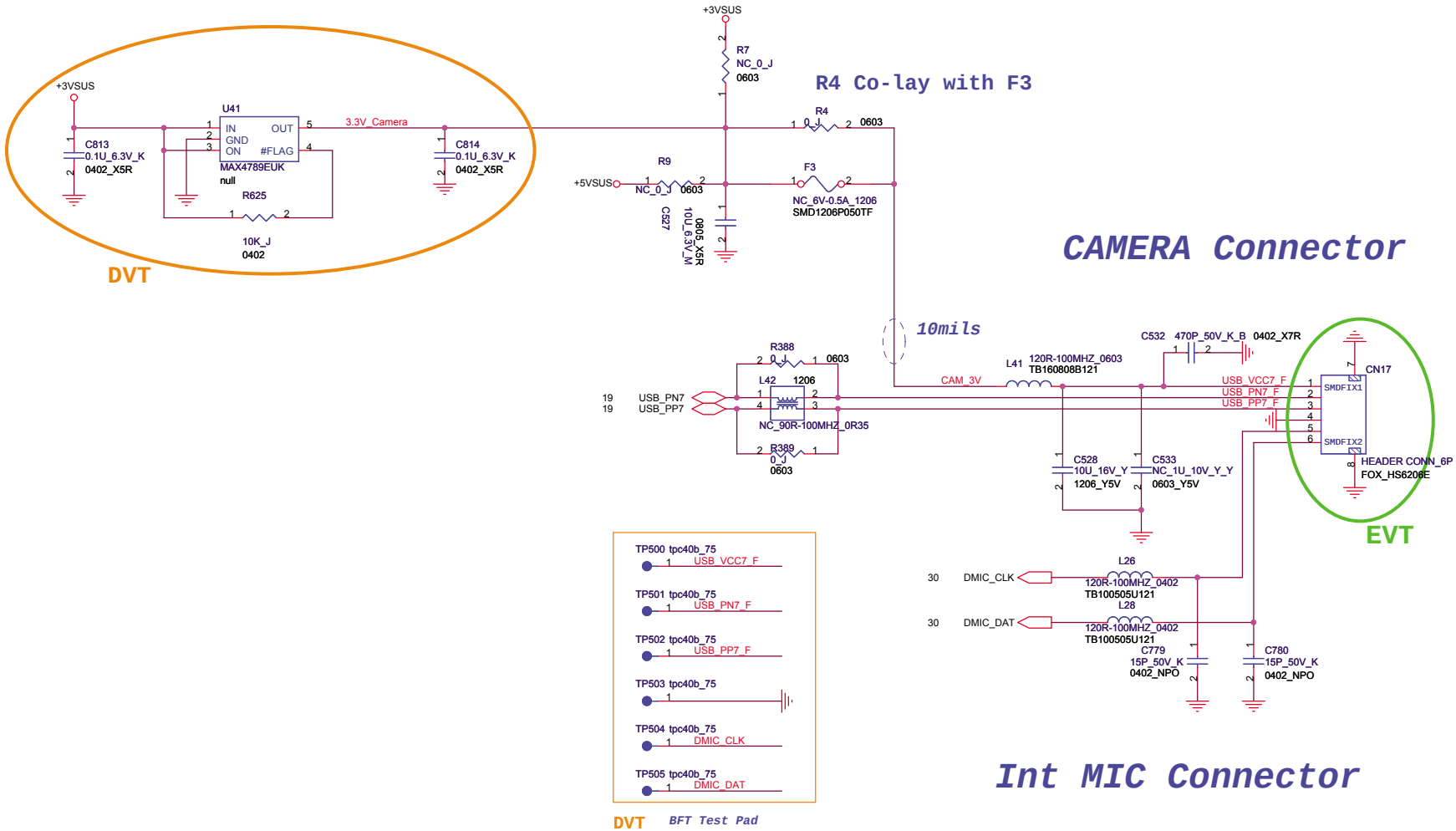

FOXCONN	HON HAI Precision Ind. Co., Ltd. CCPBG - R&D Division
Title	CAMERA/Int MIC.
Size A3	Document Number M850-1-02 Rev 1.1
Date: Friday, April 17, 2009	Sheet 38 of 60

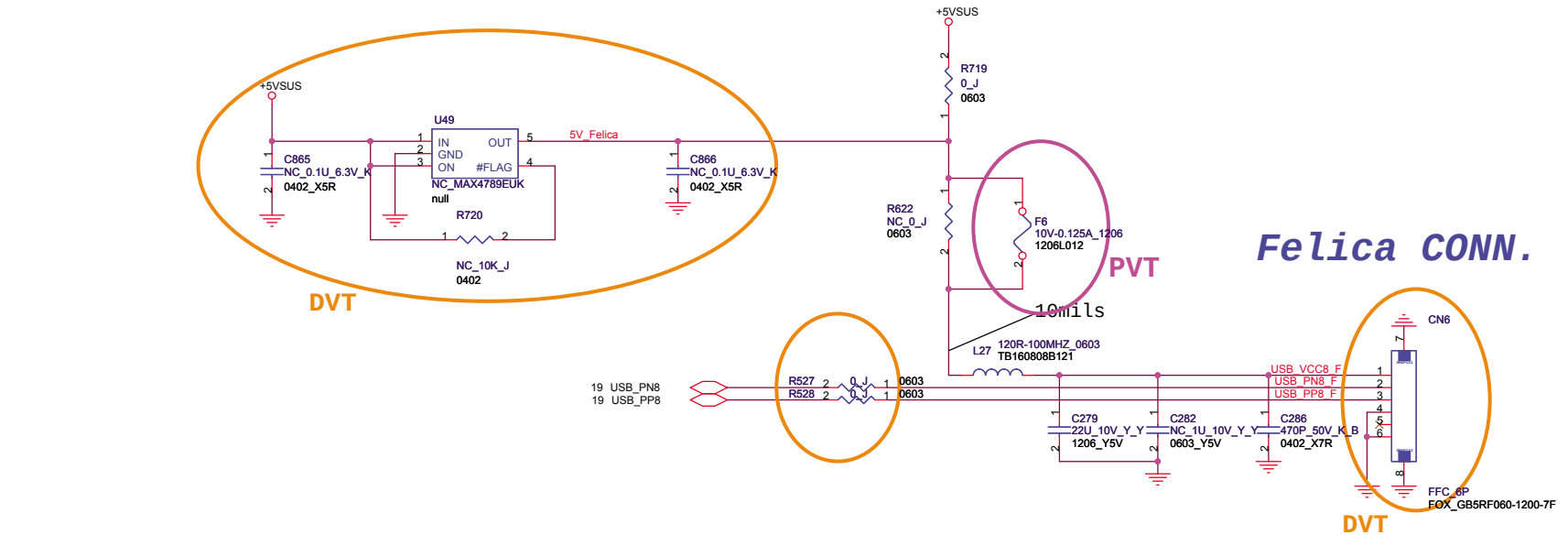

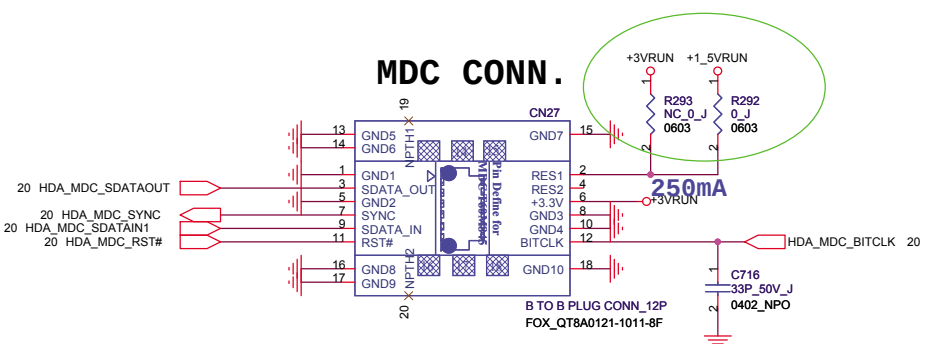

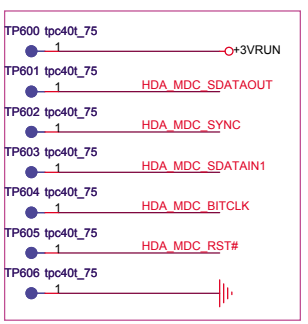

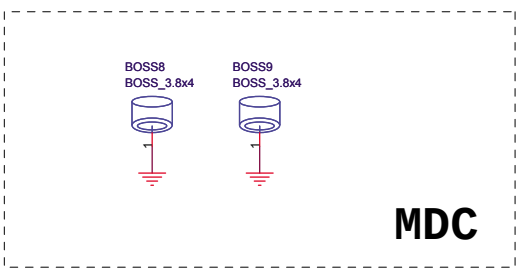

FOXCONN	HON HAI Precision Ind. Co., Ltd. CCPBG - R&D Division	
Title	Felica & Modem	
Size A3	Document Number M850-1-02	Rev 1.1
Date: Friday, April 17, 2009	Sheet 39 of 60	

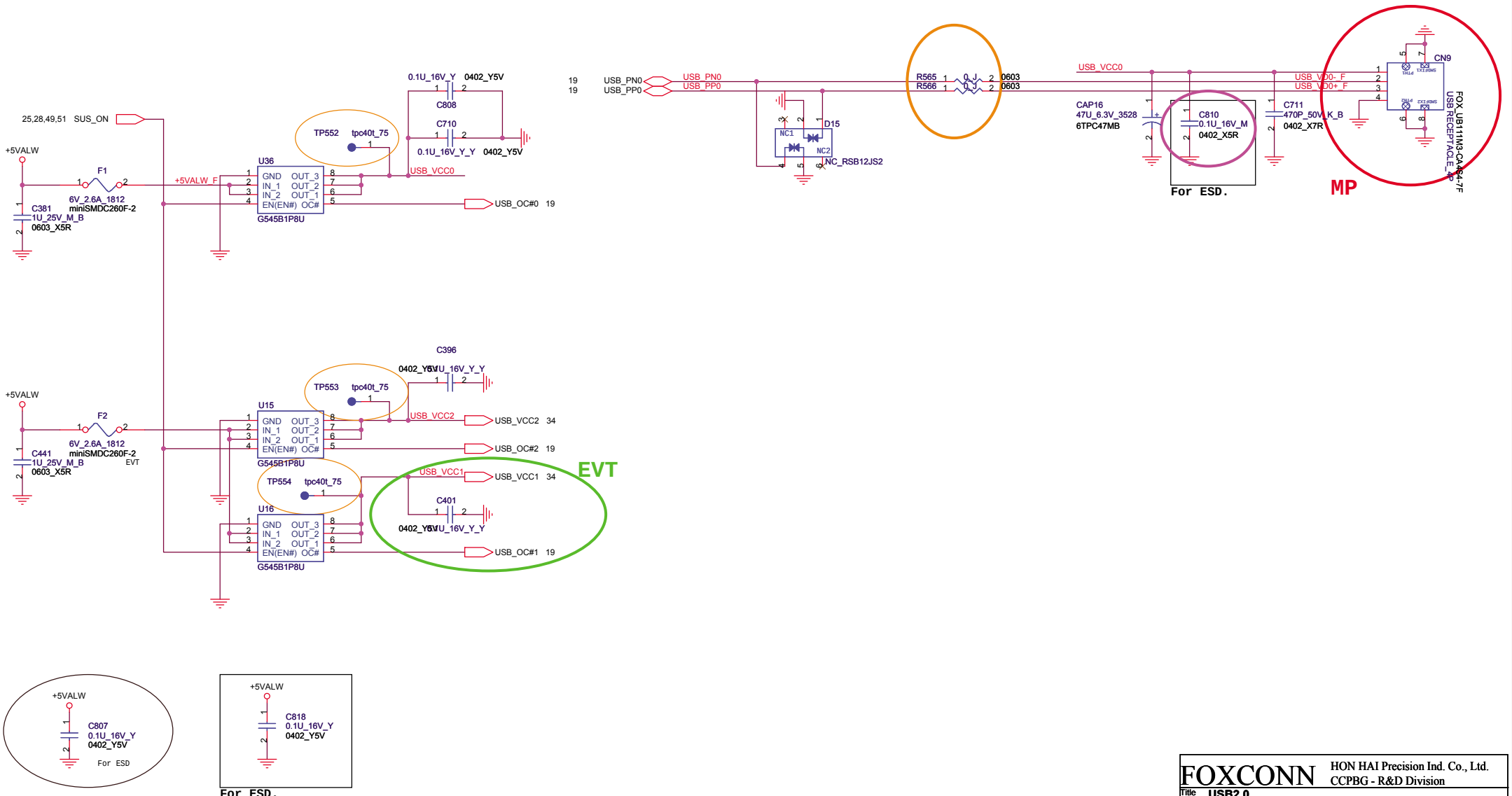

FOXCONN	HON HAI Precision Ind. Co., Ltd. CCPBG - R&D Division	
Title	USB2.0	
Size A3	Document Number M850-1-02	Rev 1.1
Date: Friday, April 17, 2009	Sheet 40 of 60	

Bluetooth connector

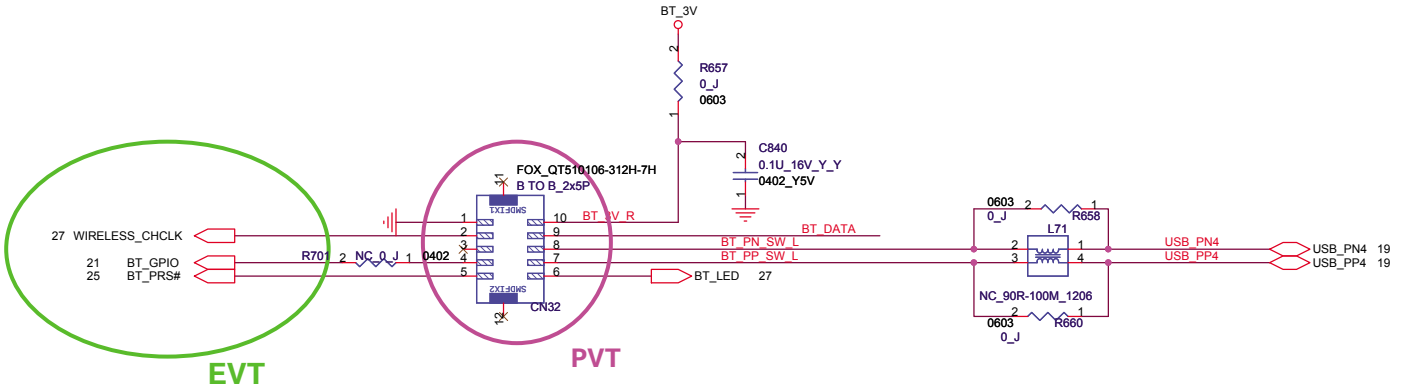

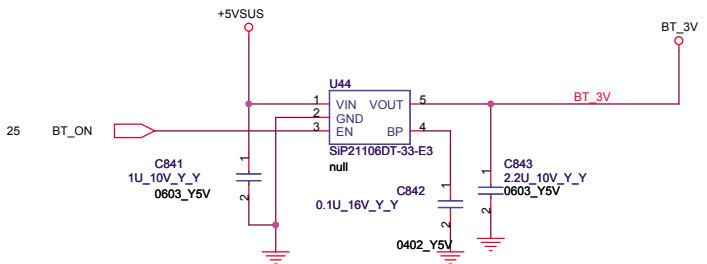

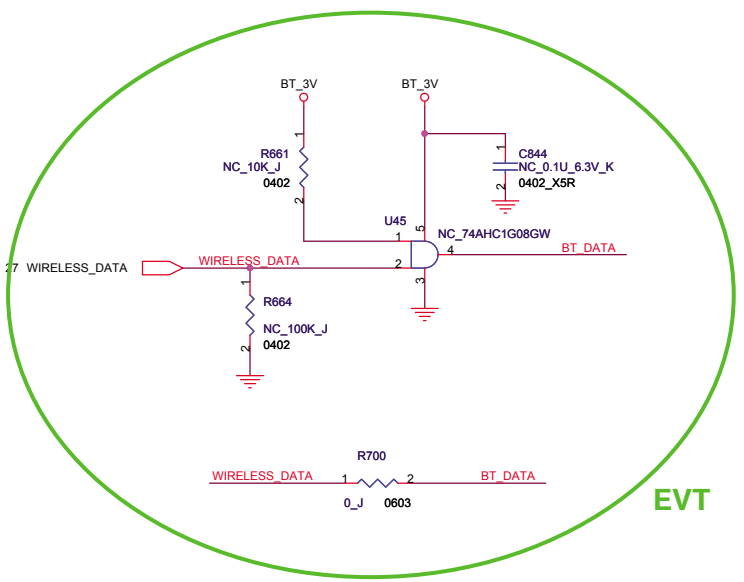

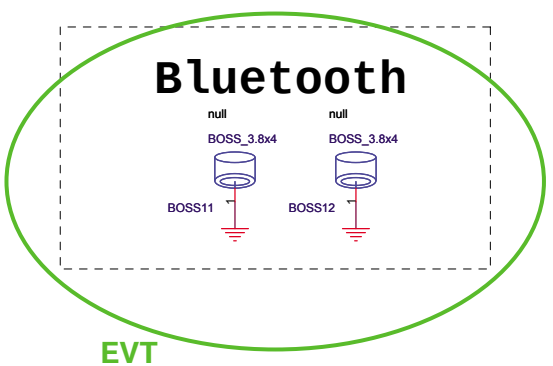

FOXCONN	HON HAI PRECISION IND. CO., LTD. CPBG - R&D Division	
Title	Bluetooth	
Size A3	Document Number M850-1-02	Rev 1.1
Date: Friday, April 17, 2009	Sheet 41 of 60	

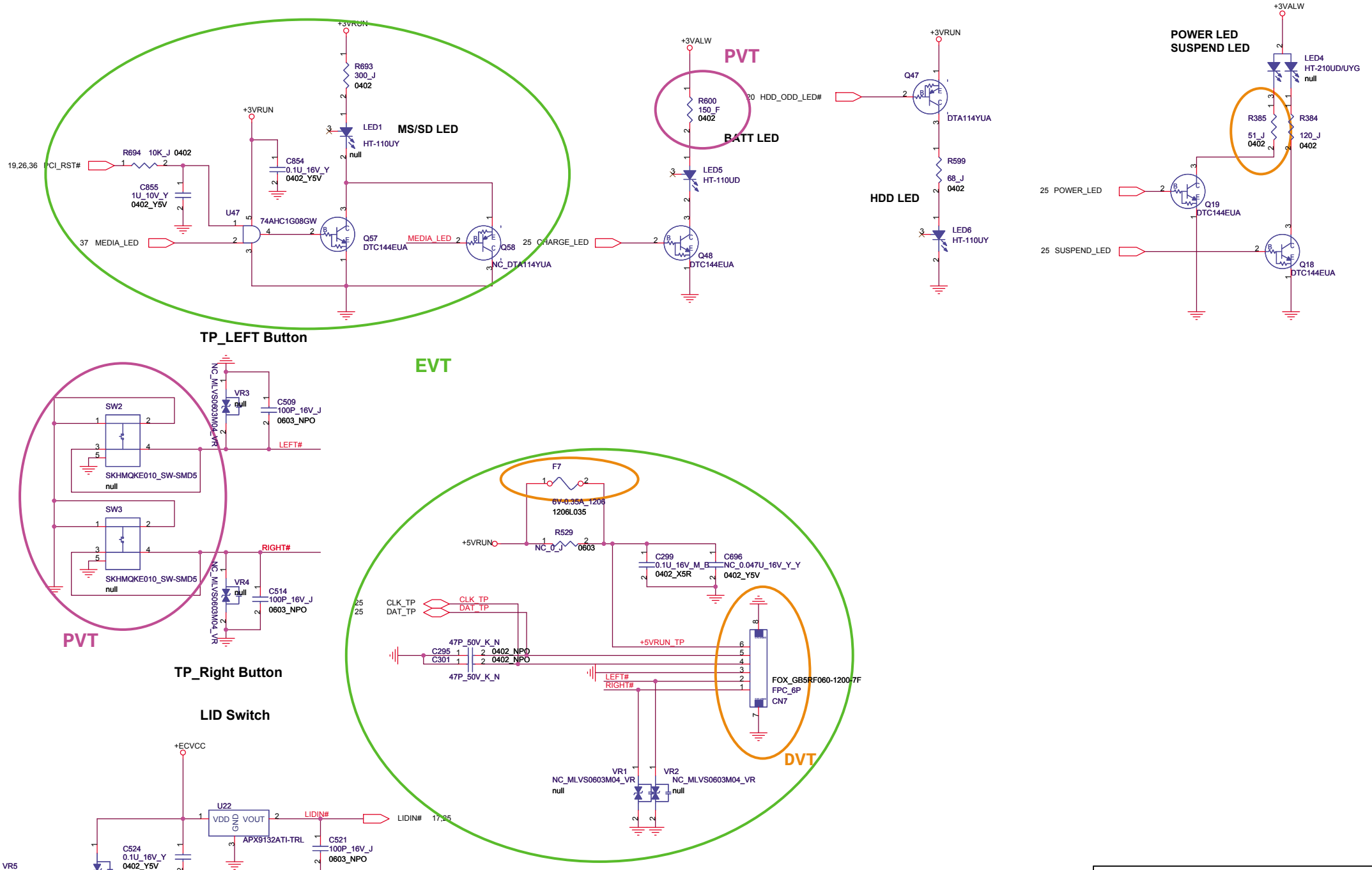

FOXCONN	HON HAI Precision Ind. Co., Ltd. CCPBG - R&D Division	
Title	LED & T/P & LID	
Size A3	Document Number M850-1-02	Rev 1.1
Date: Friday, April 17, 2009	Sheet 42 of 60	

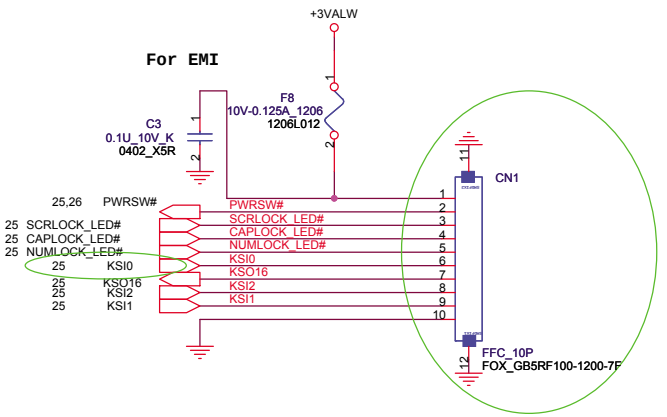

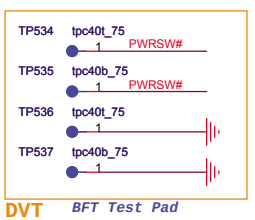

DVT *BFT Test Pad*

FOXCONN	HON HAI Precision Ind. Co., Ltd. CCPBG - R&D Division	
Title: Power Board MB CONN		
Size: A3	Document Number: M850-1-02	Rev: 1.1
Date: Friday, April 17, 2009	Sheet 43 of 60	

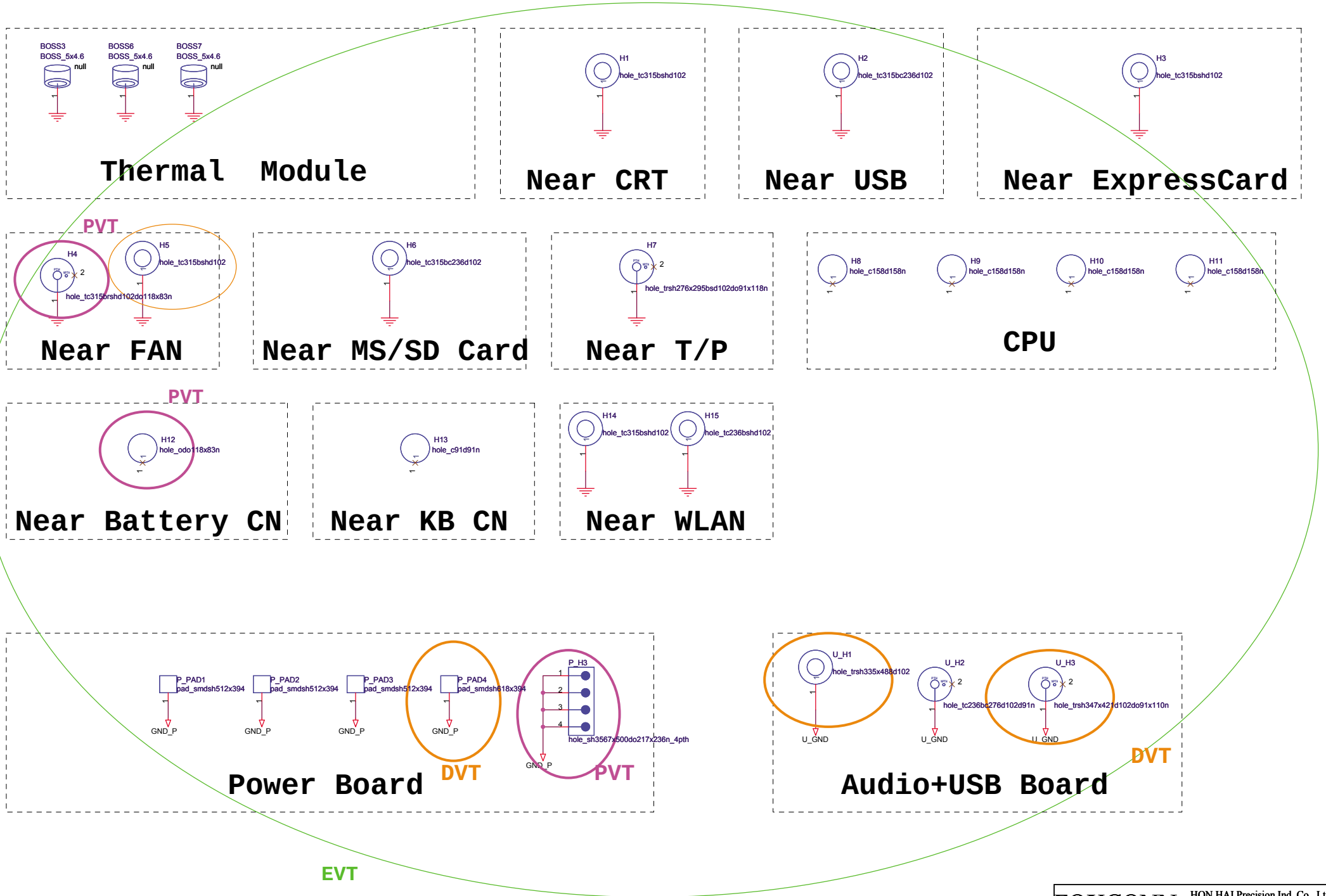

FOXCONN	HON HAI Precision Ind. Co., Ltd. CCPBG - R&D Division	
Title: HOLE		
Size: A3	Document Number: M850-1-02	Rev: 1.1
Date: Friday, April 17, 2009	Sheet 44 of 60	

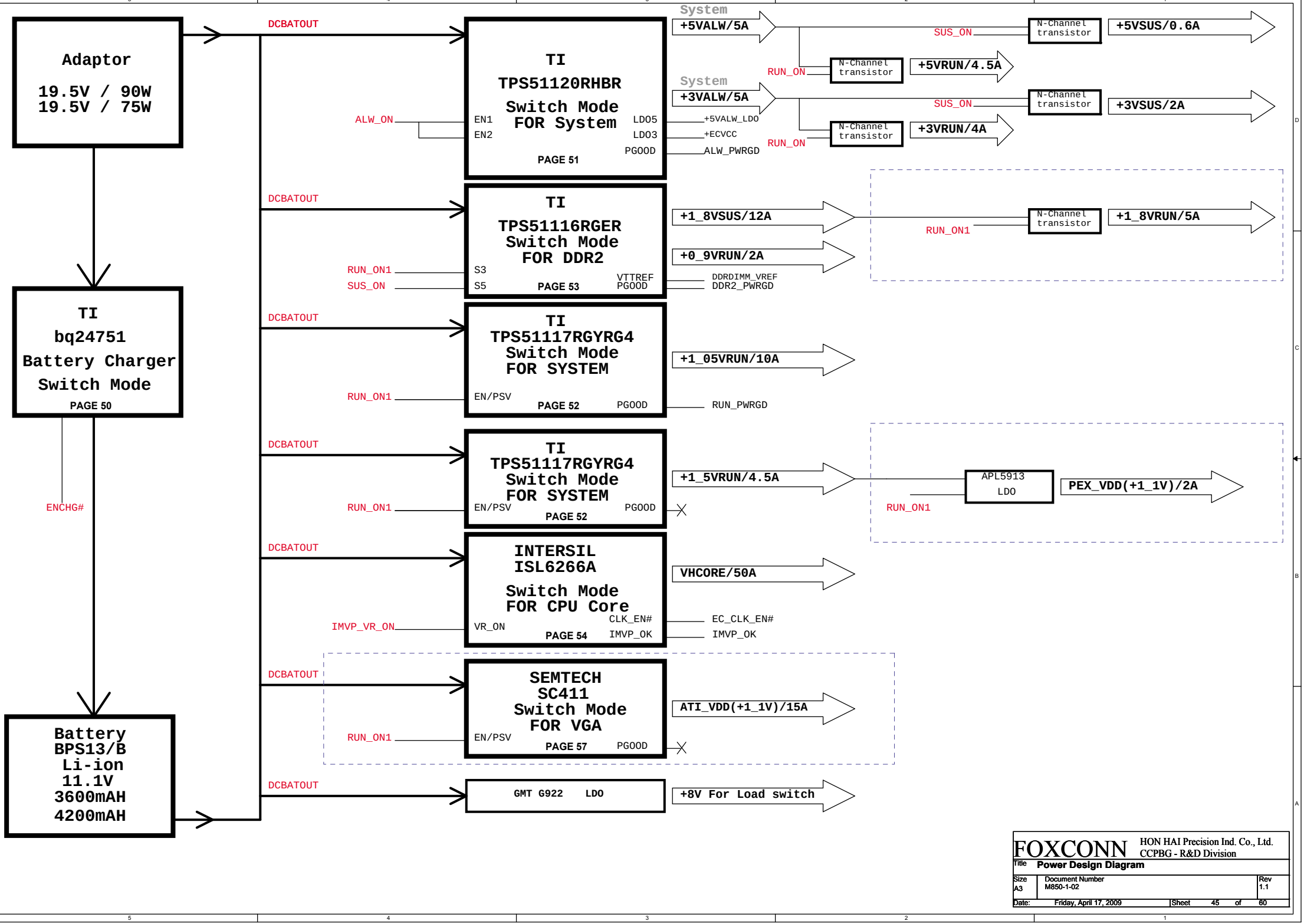

FOXCONN HON HAI Precision Ind. Co., Ltd.
CCPBG - R&D Division

Title	Power Design Diagram	
Size A3	Document Number M850-1-02	Rev 1.1
Date: Friday, April 17, 2009	Sheet 45 of 60	

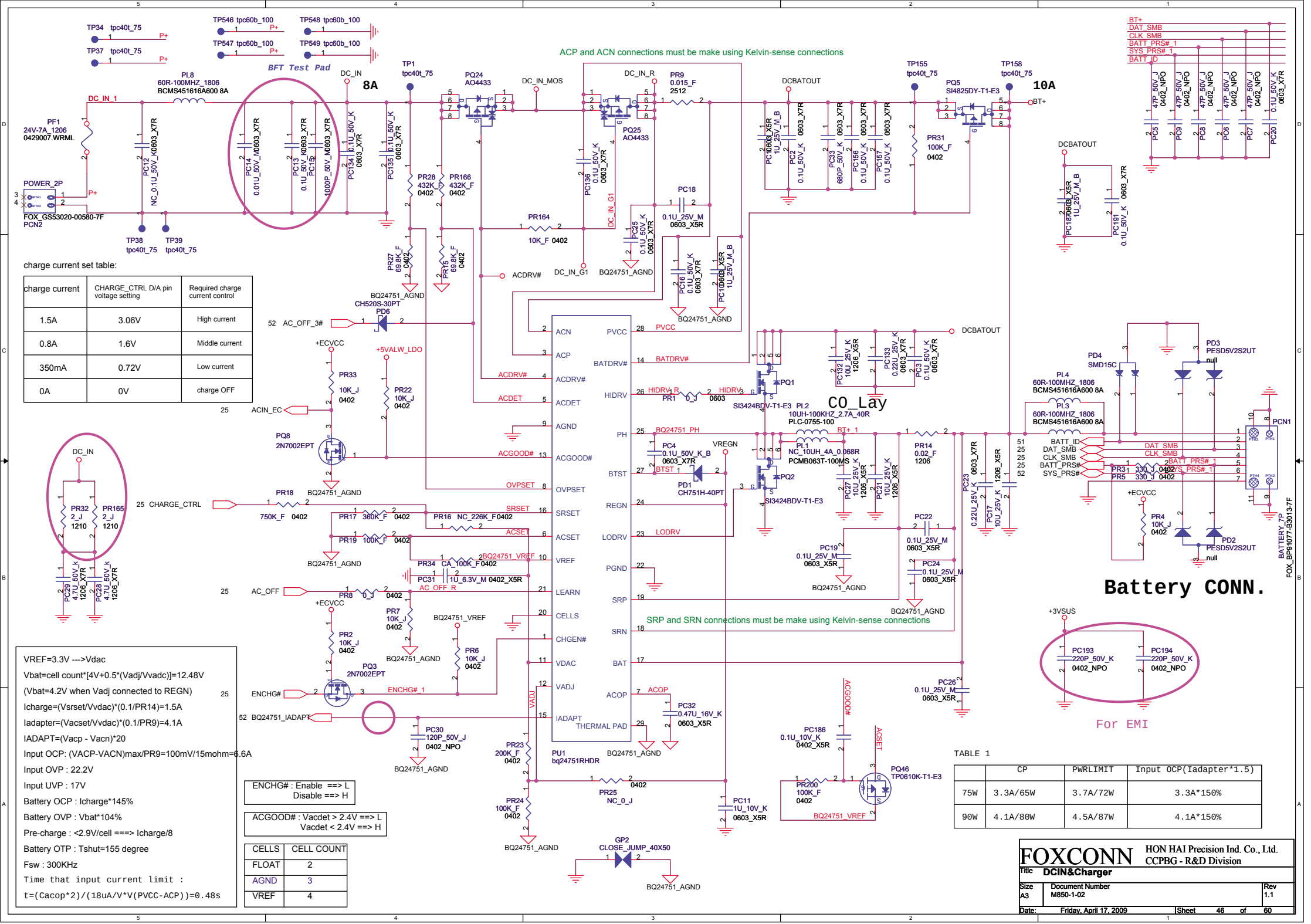
ACP and ACN connections must be make using Kelvin-sense connections
BFT Test Pad
8A
10A
Co_Lay
Battery CONN.
SRP and SRN connections must be make using Kelvin-sense connections
For EMI
charge current set table:
charge current | CHARGE_CTRL D/A pin voltage setting | Required charge current control
1.5A | 3.06V | High current
0.8A | 1.6V | Middle current
350mA | 0.72V | Low current
0A | 0V | charge OFF
VREF=3.3V ---->Vdac
Vbat=cell count*[4V+0.5*(Vadj/Vvadc)]=12.48V
(Vbat=4.2V when Vadj connected to REGN)
Icharge=(Vsrset/Vvdac)*(0.1/PR14)=1.5A
Iadapter=(Vacset/Vvdac)*(0.1/PR9)=4.1A
IADAPT=(Vacp - Vacn)*20
Input OCP: (VACP-VACN)max/PR9=100mV/15mohm=6.6A
Input OVP : 22.2V
Input UVP : 17V
Battery OCP : Icharge*145%
Battery OVP : Vbat*104%
Pre-charge : <2.9V/cell ===> Icharge/8
Battery OTP : Tshut=155 degree
Fsw : 300KHz
Time that input current limit :
t=(Cacop*2)/(18uA/V*V(PVCC-ACP))=0.48s
ENCHG# : Enable ==> L
Disable ==> H
ACGOOD# : Vacdet > 2.4V ==> L
Vacdet < 2.4V ==> H
CELLS | CELL COUNT
FLOAT | 2
AGND | 3
VREF | 4
TABLE 1
 | CP | PWRLIMIT | Input OCP(Iadapter*1.5)
75W | 3.3A/65W | 3.7A/72W | 3.3A*150%
90W | 4.1A/80W | 4.5A/87W | 4.1A*150%
FOXCONN
HON HAI Precision Ind. Co., Ltd.
CCPBG - R&D Division
Title DCIN&Charger
Size A3
Document Number M850-1-02
Rev 1.1
Date: Friday, April 17, 2009
Sheet 46 of 60

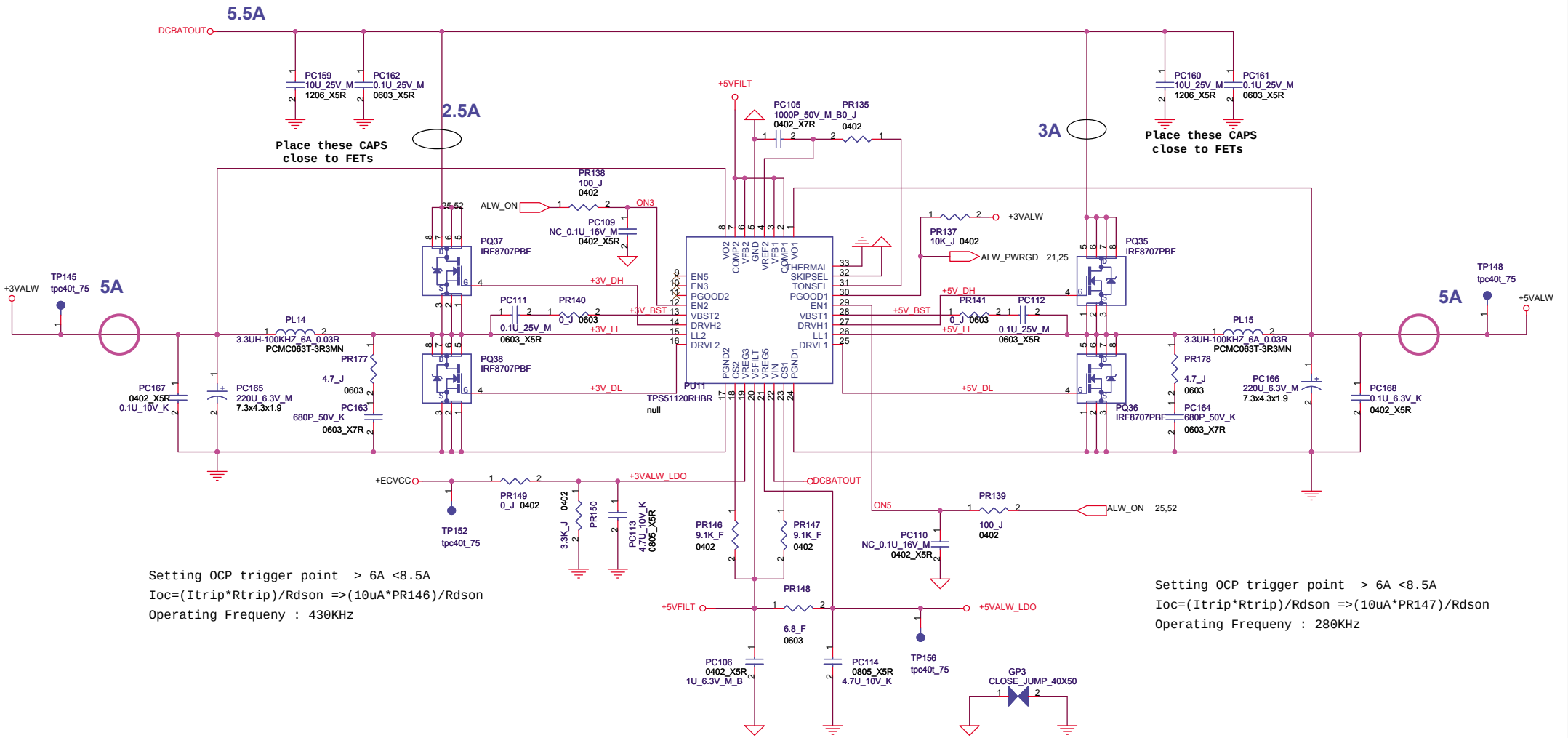

FOXCONN HON HAI Precision Ind. Co., Ltd.
CCPBG - R&D Division

Title	SYS Power (+3_3V/+5V)	
Size A3	Document Number M850-1-02	Rev 1.1
Date: Friday, April 17, 2009	Sheet 47 of 60	

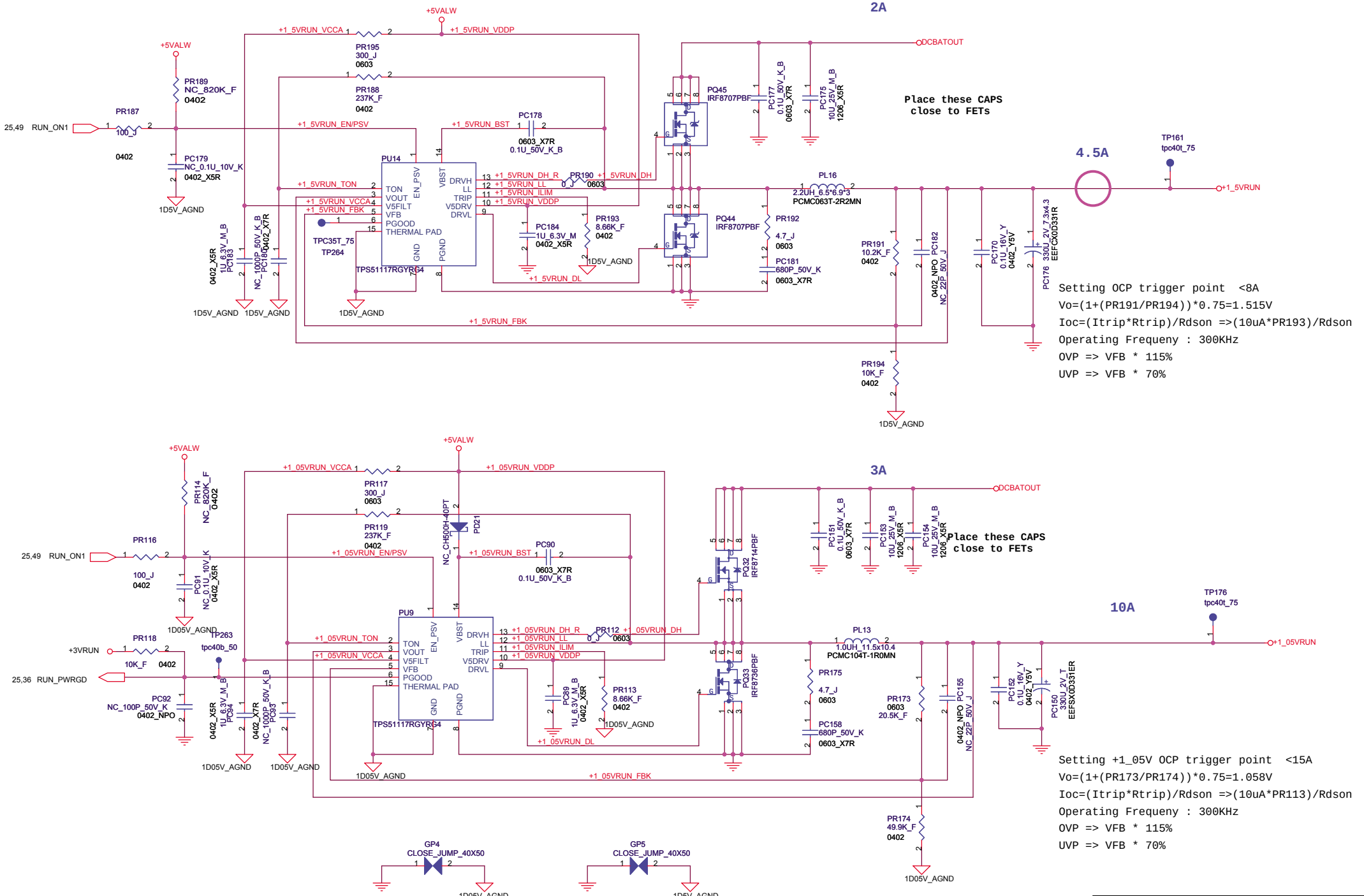

FOXCONN	HON HAI Precision Ind. Co., Ltd. CCPBG - R&D Division	
Title	SYS Power(+1_5V/+1_05V)	
Size A3	Document Number M850-1-02	Rev 1.1
Date: Friday, April 17, 2009	Sheet 48 of 60	

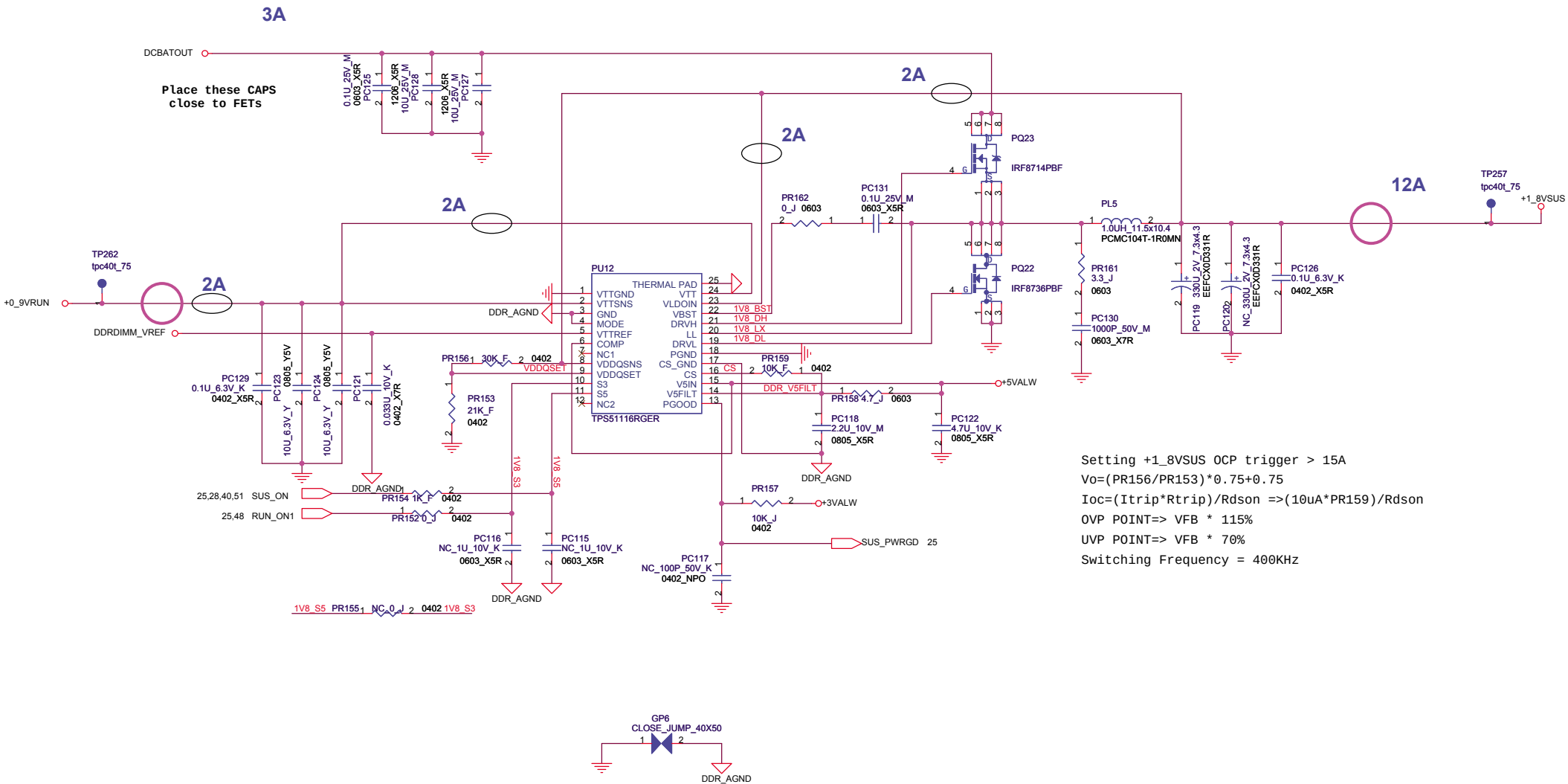

FOXCONN	HON HAI Precision Ind. Co., Ltd. CCPBG - R&D Division	
Title	DDR2 Power(+1_8V/+0_9V)	
Size A3	Document Number M850-1-02	Rev 1.1
Date: Friday, April 17, 2009	Sheet 49 of 60	

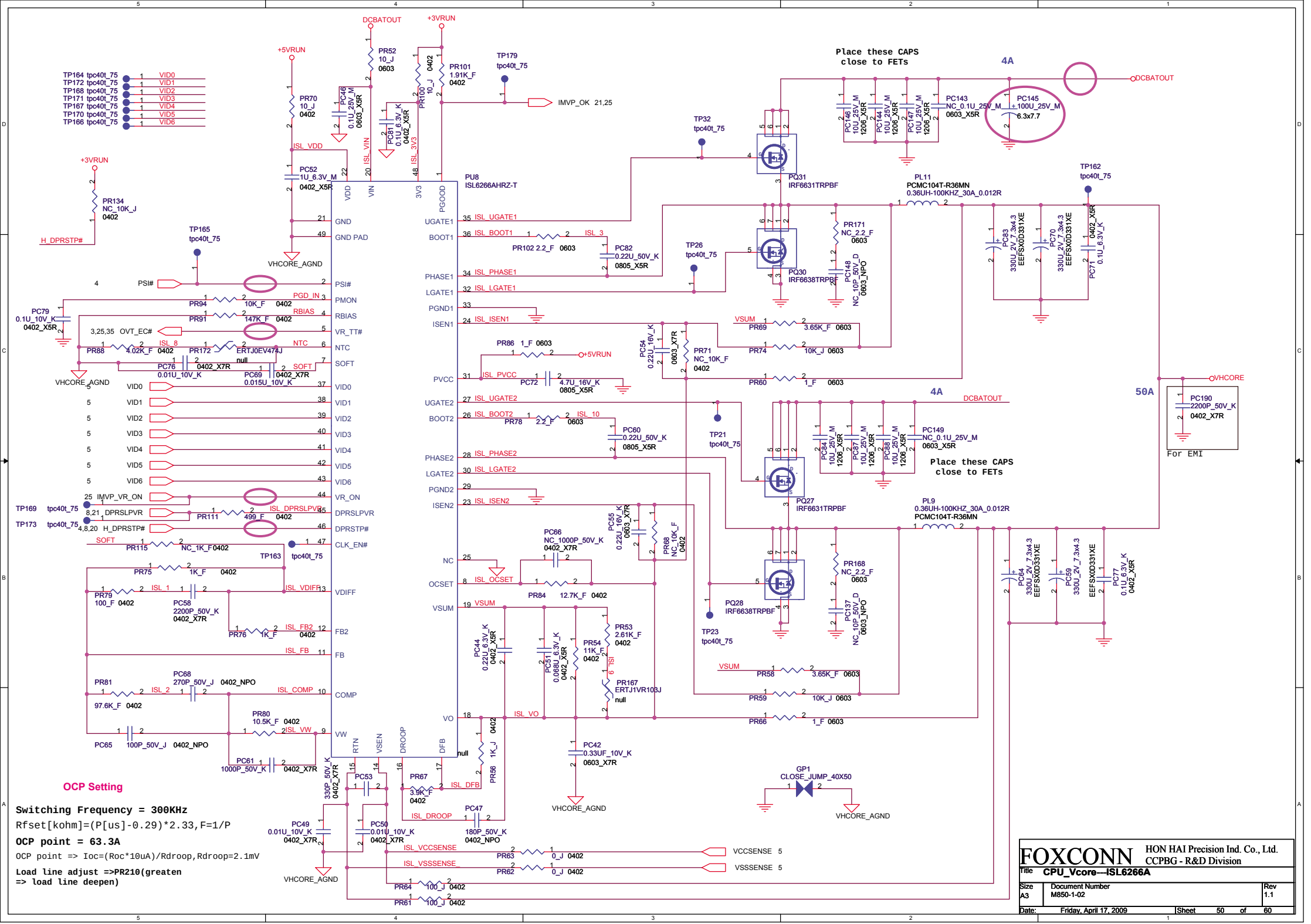
Place these CAPS close to FETs
4A
DCBATOUT
50A
VHCORE
For EMI
PU8
ISL6266AHRZ-T
PQ31 IRF6631TRPBF
PQ30 IRF6638TRPBF
PQ27 IRF6631TRPBF
PQ28 IRF6638TRPBF
PL11 PCMC104T-R36MN 0.36UH-100KHZ_30A_0.012R
PL9 0.36UH-100KHZ_30A_0.012R PCMC104T-R36MN
GP1 CLOSE_JUMP_40X50
IMVP_OK 21,25
VCCSENSE 5
VSSSENSE 5
OCP Setting
Switching Frequency = 300KHz
Rfset[kohm]=(P[us]-0.29)*2.33,F=1/P
OCP point = 63.3A
OCP point => Ioc=(Roc*10uA)/Rdroop,Rdroop=2.1mV
Load line adjust =>PR210(greaten
=> load line deepen)
FOXCONN
HON HAI Precision Ind. Co., Ltd.
CCPBG - R&D Division
Title CPU_Vcore---ISL6266A
Size A3
Document Number M850-1-02
Rev 1.1
Date: Friday, April 17, 2009
Sheet 50 of 60

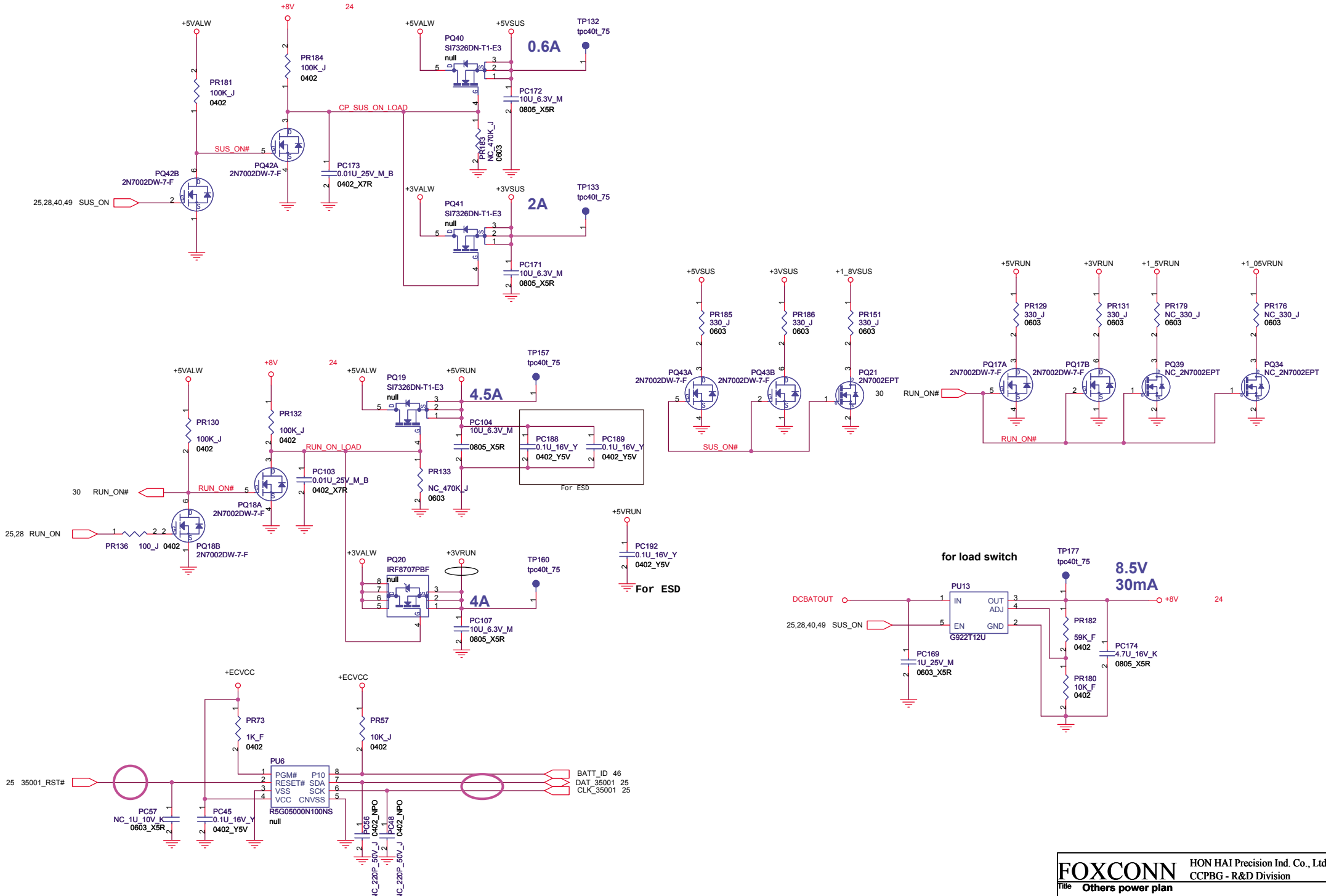

FOXCONN	HON HAI Precision Ind. Co., Ltd. CCPBG - R&D Division	
Title: Others power plan		
Size: A3	Document Number: M850-1-02	Rev: 1.1
Date: Friday, April 17, 2009	Sheet 51 of 60	

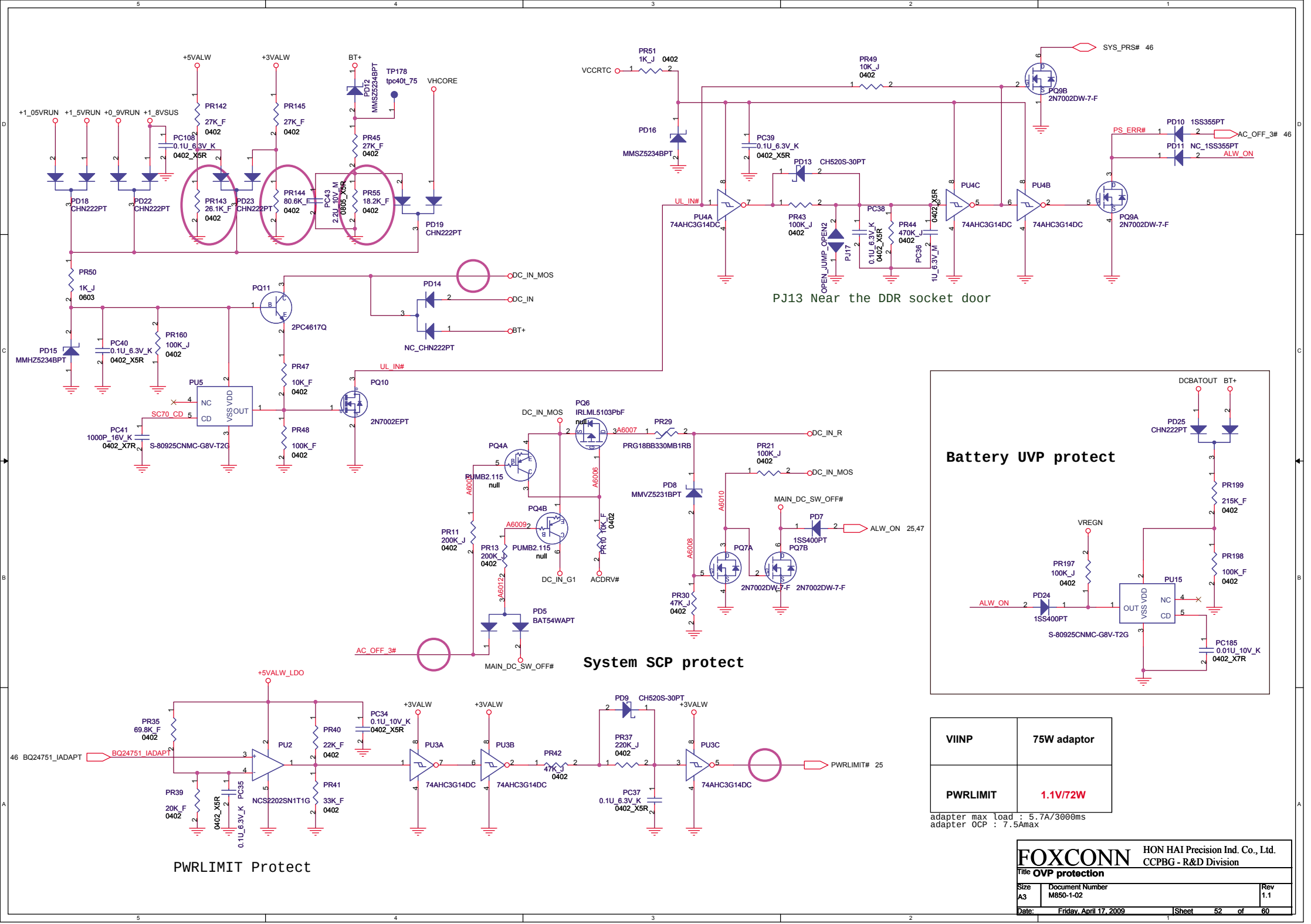

VIINP	75W adaptor
PWRLIMIT	1.1V/72W

adapter max load : 5.7A/3000ms
adapter OCP : 7.5Amax

FOXCONN
HON HAI Precision Ind. Co., Ltd.
CCPBG - R&D Division

Title: OVP protection

Size	Document Number	Rev
A3	M850-1-02	1.1

Date: Friday, April 17, 2009 Sheet 52 of 60

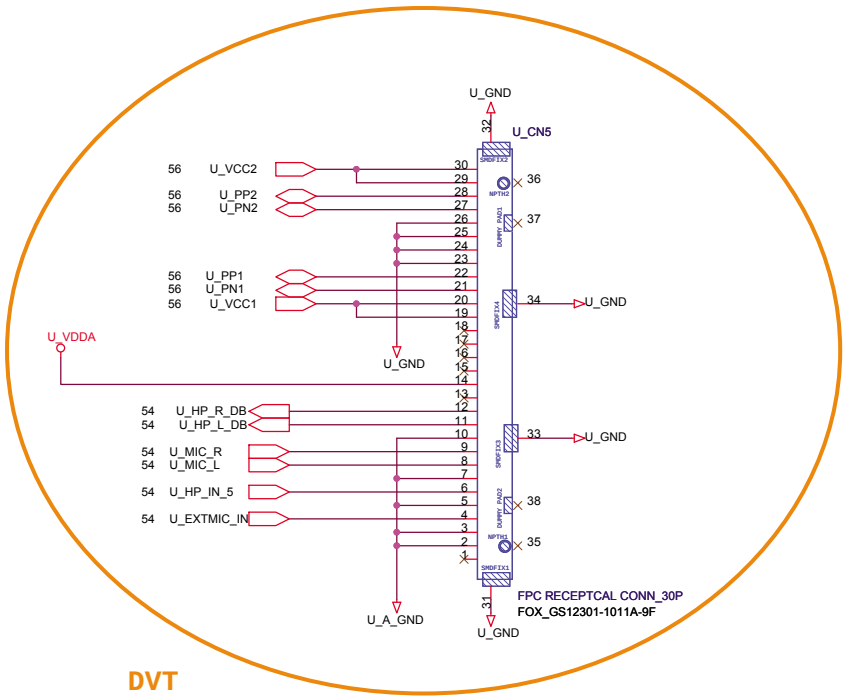

DVT

FOXCONN	HON HAI PRECISION IND. CO., LTD. CPBG - R&D Division	
Title	***Audio+USB DB CONN***	
Size A3	Document Number ***M850-1-02***	Rev ***1.1***
Date: Friday, April 17, 2009	Sheet 53 of 60	

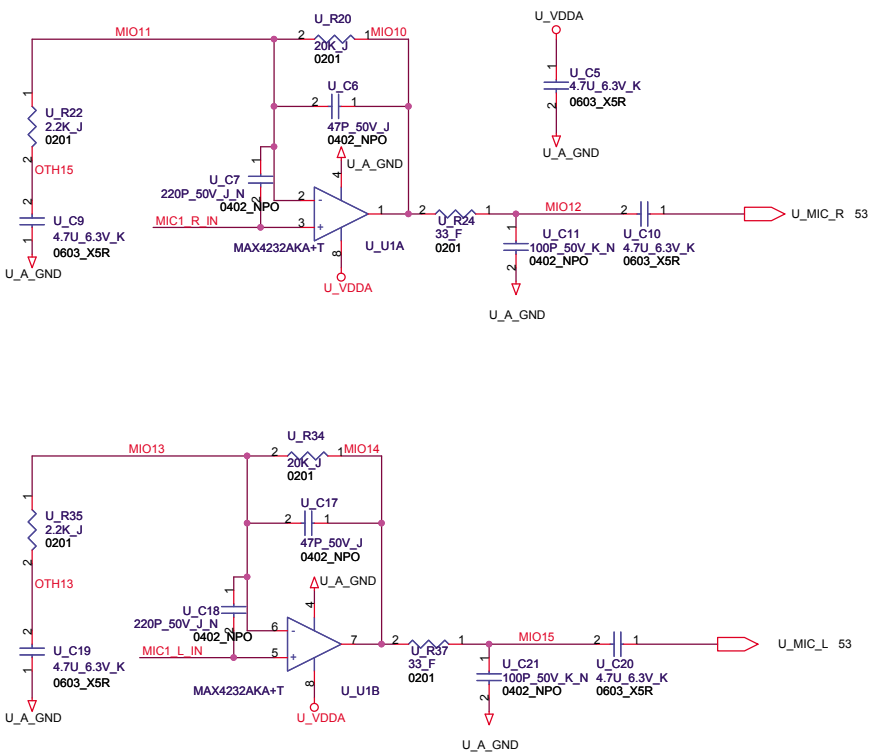

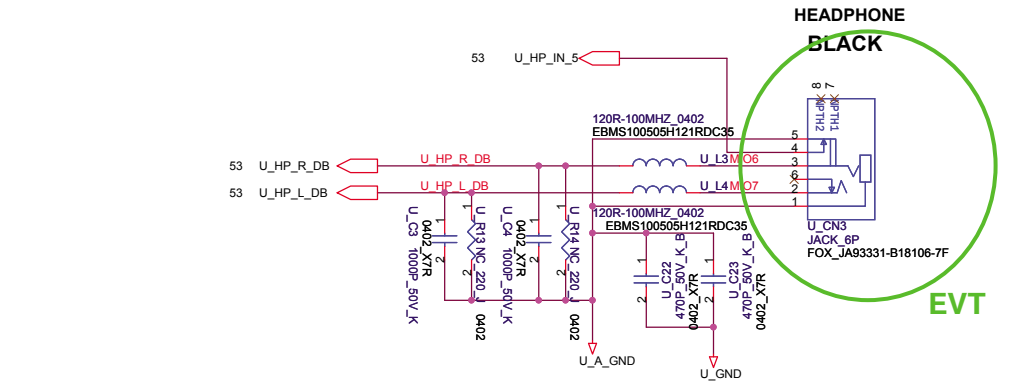

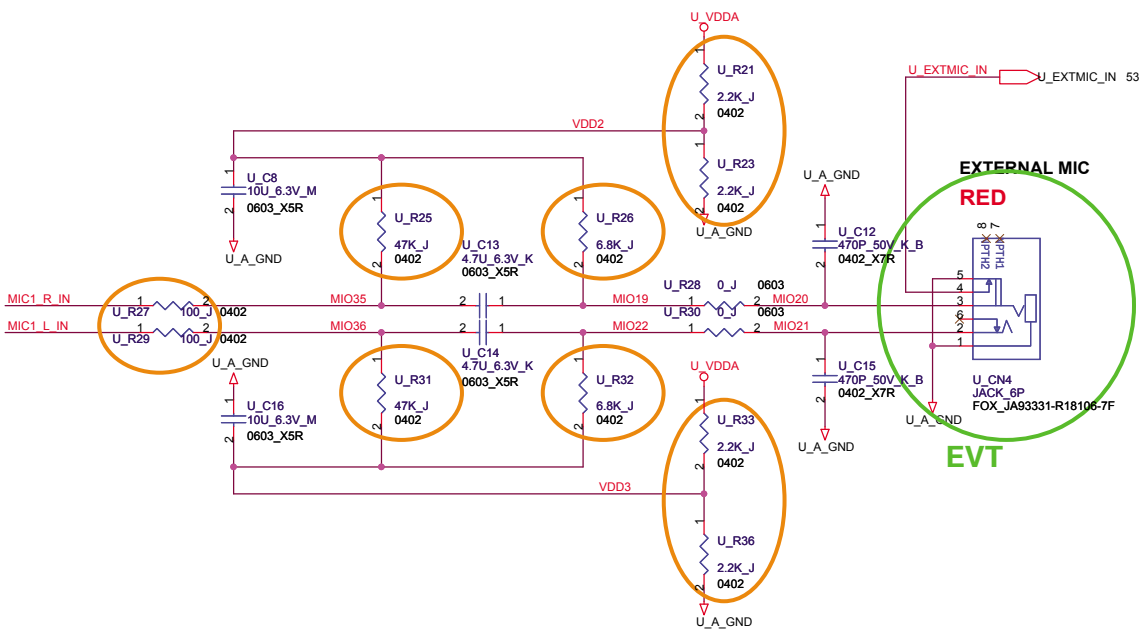

FOXCONN HON HAI Precision Ind. Co., Ltd.
CCPBG - R&D Division

Title	Audio (HP, MIC Jack)	
Size A3	Document Number M850-1-02	Rev 1.1
Date: Friday, April 17, 2009	Sheet 54 of 60	

Power Button Board

POWER BUTTON

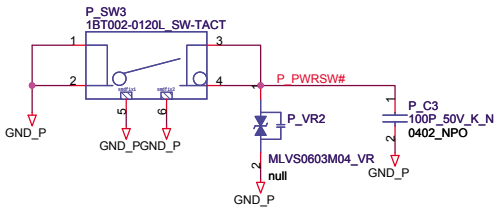

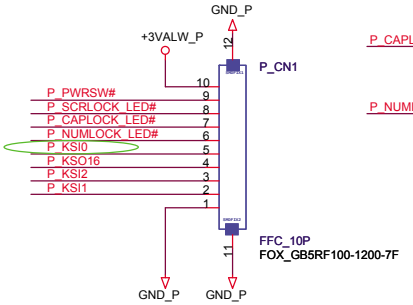

NUM LOCK LED

CAP LED

SCROLL LOCK LED

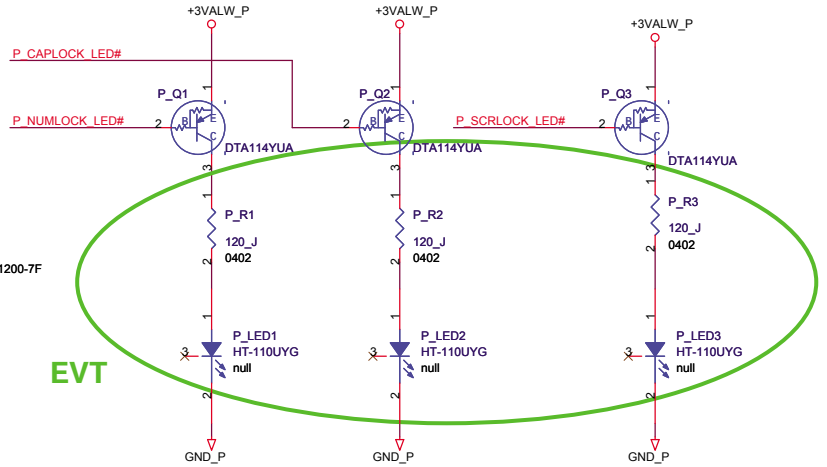

EVT

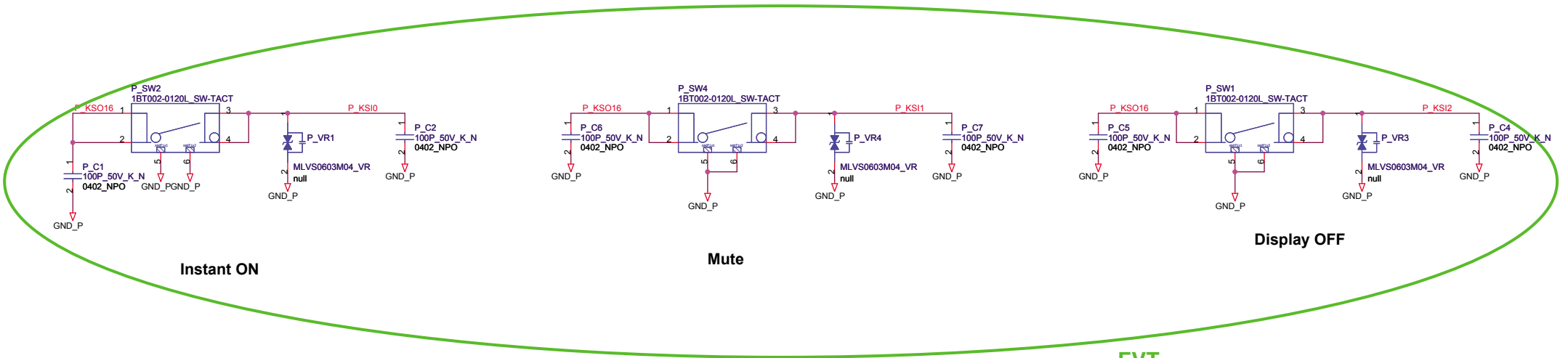

EVT

FOXCONN	HON HAI Precision Ind. Co., Ltd. CCPBG - R&D Division	
Title	Power Board DB & CONN	
Size A3	Document Number M850-1-02	Rev 1.1
Date: Friday, April 17, 2009	Sheet 55 of 60	

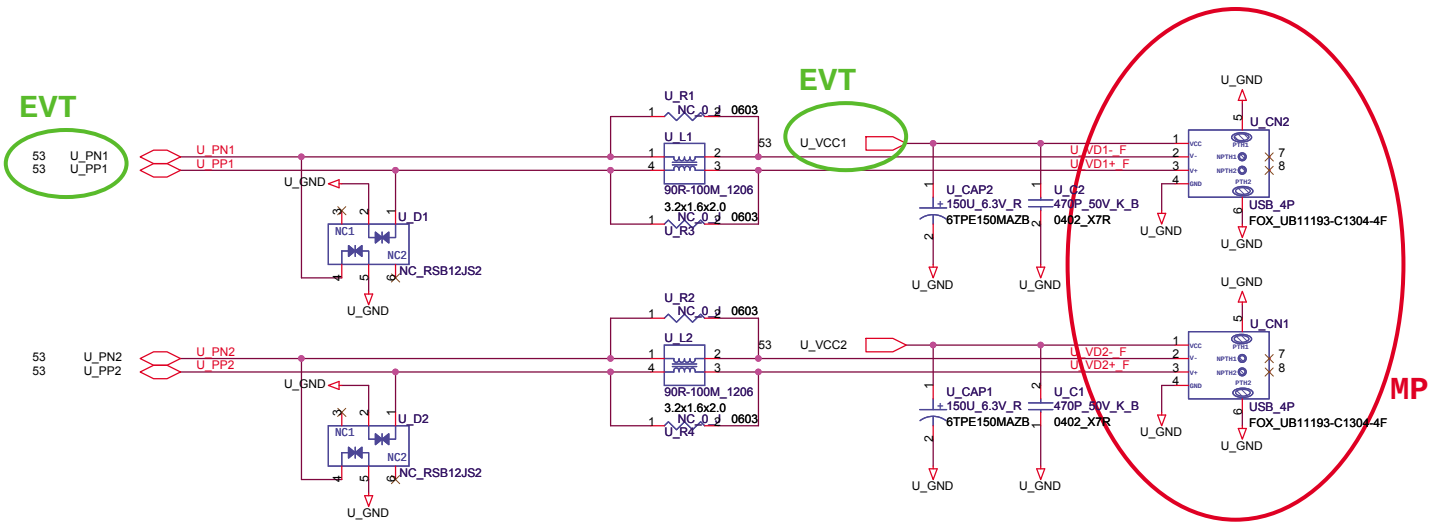

FOXCONN	HON HAI Precision Ind. Co., Ltd. CCPBG - R&D Division	
Title	USB DB	
Size A3	Document Number M850-1-02	Rev 1.1
Date: Friday, April 17, 2009	Sheet 56 of 60	

M850 EVT

(2008/08/29)

P.37 Change CN16 from WK21923-S6P-7F to WK21923-R6S-7F for ME request.
P.24 Change CN25 from LN27131-A403-4F to LN21131-F404-9F for ME request.
P.24 Change CN13 from LD2722F-SR6L to LD2722H-S49L for ME request.
P.17 Change CN18 from HT1310F to GS12201-1011-9F for ME request.
P.38 Change CN17 from HS6106E to HS6206E for ME request.
P.29 Change CN22 from HS6108E to HS8208E for ME request.
P.25 Change CN3 from GB21240-0002-7F to 196009-24021 for ME request.
P.41 Change CN32 from QT510106-111H-7F to QT510106-311H-7F for ME request.
P.27 Change SW4 from 1BS007-12120-002-7F to 1BS007-12110-002-7F for ME request.
P.31 Change U_CN4 from JA9333L-R5S7-7F to JA93331-R18106-7F for ME request.
P.31 Change U_CN3 from JA9333L-B5S7-7F to JA93331-B18106-7F for ME request.
P.43 Change U_CN1 and U_CN2 from UB11193-C1314-4F to UB11193-C1308-4F for ME request.
P.44 Add BOSS11 and BOSS12 for ME request.

(2008/08/29)

P.37 Change CN11 form UV31413-GR56P-7F to UV31413-WZ03P-7F for ME request.
P.16 Change CN2 from DZ11A91-MA2SY-4F to DZ11A91-SB281-4F for ME request.
P.18 Change CN31 from QJ5119L-NT03-4F to QJ5119L-NK03-4F for ME request.
P.40 Change CN9 from UB11193-C1314-4F to UB1112C-CA501-7F for ME request.

(2008/09/01)

P.47 Change PR146 from 6.98K_F to 9.1K_F for OCP setting.
P.47 Change PR147 from 6.19K_F to 9.1K_F for OCP setting.
P.48 Change PR193 from 5.49K_F to 8.66K_F for OCP setting.

(2008/09/02)

P.17 Change CN18 from GS12201-1011-9F to GS12301-1011A-9F for support Dual-LVDS.

(2008/09/19)

P.27 Delete R611&R612 for MOR's requested
P.27 Add D22 for MOR's requested
P.19,34,40,43 Change external USB port from USBP3N/USBP3P to USBP1N/USBP1P for MOR's requested
P.19,27,28 Change PCIE port from Express Card #2, WLAN #3 to WLAN #2, Express Card #3 for MOR's requested
P.46 Change PCN1 from BP91077-B2013-7F to BP91077-B3013-7F for ME's requested
P.29 Change U4 from 88E8055 to 88E8057 for MOR's requested
P.41 Delete R659,665,663,662 for MOR's requested
P.27 Change C538,C544,C536 to NC for MOR's requested

(2008/09/22)

P.37 Change CN11 from UV31413-WZ03P-7F to UV31413-RU81P-7F for ME's requested

(2008/09/24)

P.40 Change CN9 from UB1112C-CA501-7F to UB1112C-CA207-7F for ME's requested
P.15 Swap RP27,RP38,RP37,RP36,RP35,RP34,RP33 for layout requested

(2008/09/26)

P.56 [Power board DB button] Add P_SW4,P_C6,P_C7,P_VR4 for add mute button
P.17 [Inverter CONN] Change CN19 from HS6106E to HS6108E for support LED backlight function
P.17 [Panel ID Switch] Change SW1 from HDS404-E to FHDS-04-T-V-T/R for shortage issue

(2008/09/26)

P.28 [ExpressCard] Add R689,R690,R691,R692 for test GMT577 ExpressCard power switch
P.29 [GLAN]Change L5 from NS682403P to LFE9249-R for PUR's suggestion
P.18 [HDMI] Change CN31 from QJ5119L-NK03-4F to QJ5119L-NT03-4F for ME's ID concern
P.44 [Thermal Module Nut] Change BOSS3,BOSS6,BOSS7 form F50M20-501130BS to EMI_F50M20_351130BS for ME's concern
P.42 [TouchPad] Change CN7 from GB5RF120-1200-7F to GB5RF060-1200-7F for change to 6-pin solution
P.42 [MS/SD LED] Combine MS/SD LED for MOR's requested
P.56 [Caps/Num/Scroll lock LED] Change from HT-150YG to HT-110UYG for ME's ID concern
P.08,20 [HDMI] Add R695,R696,R697,R698,R699 for correct HDA-HDMI signal
P.22 [HDMI] Add U48,C856,C857 for IHDMI HDA bus need to use 1.5V power
P.17 [LVDS] Change L98 from EBMS160808A121(400mA) to HCB1608KF-121T10(1A) for Panel max current is 500mA

(2008/10/06)

P.42 [TP] Reserved 12pin TP solution in EVT

(2008/10/07)

P.41 [BT]NC U45,R661,C844,R664 and add R700 for BT module has internal protection schematics for BT_DATA pin.
P.27 [WLAN]Change Q49 from FET to transistor for a little cost down.
P.44 [HOLE]Update HOLE for ME's requested.

(2008/10/08)

P.16 [CRT]Change DDC 3V pull-up R57,R58 from 2.2k to 3.9k to meet E-DDC spec.
P.17 [LVDS]Change R393 from 10k to 100k to meet desing guide.
P.17 [LVDS]Change R1 from LCD_PWR_EN side to GM_LCDVCC_EN side for better.
P.18 [HDMI]Delete RP47 for Cantiga cannot receive 5V DDC signal, so RP47 is useless.
P.18 [HDMI]Change Q52 from dual package FET to single package FET.
P.18 [HDMI]Delete R656 for PS8101 has internal pull-down.
P.18 [HDMI]Delete D21 and R652 for if using diode, HDMI_+5VRUN voltage cannot meet spec. And HDMI_+5VRUN need back drive protection.
P.18 [HDMI]Delete R649 for HDMI DDC need back drive protection so cannot use R649.
P.18 [HDMI]Change R651,R650 from 2.2k to 3.9k to meet E-DDC spec.

(2008/10/09)

P.25,43,55 [Button] Delte KSO15 and add KSI0 control signal for SW request
P.41 [BT]Add R701(NC) for new BT module reserved

(2008/10/10)

P.53 [Audio+USB CONN]Swap pin assignment for cable routing smooth.
P.03 [Penryn]Add C859(NC) for EMI verification.
P.25 [EC]Add R702~R725 for EMI verification.
P.43 [Power Board CONN]Add C860~C867(NC) for EMI verification.

(2008/10/11)

P.44 [HOLE]Update all holes for ME's requested

FOXCONN	HON HAI Precision Ind. Co., Ltd. CCPBG - R&D Division	
Title	History (1)	
Size A3	Document Number M850-1-02	Rev 1.1
Date: Friday, April 17, 2009	Sheet 57 of 60	

M850 EVT

(2008/10/13)

P.25 [EC]Delete R702~R725 for layout space not enough
P.43 [Power Board CONN]Delete C860~C867 for layout space not enough.
P.40 [USB]Change CN9 from UB1112C-CA207-7F to UB11123-CA301-7F for ME's concerned.
P.46 [DCIN&Charger]Add PC193,PC194(NC) for EMI verification

(2008/10/14)

P.44 [HOLE]Delete H16,H17,H18 for ME's requested.
P.21 [ICH9]Delete R301 for needless
P.40 [USB]Change CN9 from UB11123-CA301-7F to UB111M3-CA4S4-7F for ME's requested

(2008/10/15)

P.34 [Audio]Add C860(NC) for EMI verification
P.15 [DDR2]Swap RP36 for layout convenient
P.18 [HDMI]Mount R638 and NC R637 for meet Parade PC0,PC1 default setting

(2008/10/16)

P.30 [Audio]Change to mount R214 and NC R220 for VCCHDA use 1.5V power
P.39 [Modem]Change to mount R292 and NC R293 for VCCHDA use 1.5V power
P.18 [HDMI]Add Q59,R702 for OE# function
P.18 [HDMI]Add C861,R703~R712(NC) for reserve to use PS8171

(2008/10/17)

P.18 [HDMI]swap RP51,RP50,RP49,RP48 for layout convenient
P.18 [HDMI]Add R713~R718(NC) for reserve to use PS8171
P.18 [HDMI]Change Q59 from 2N7002W to CHT84PT for OE# function

(2008/10/21)

P.30 [Audio]Add C864(NC) for EMI verification
P.06 [Clock Gen]Add C862,C863(NC) for EMI verification

M850 DVT

(2008/11/13)

P.32 [Audio]Reverse JSPK1 pin definiens for ME's concern
P.53 [Audio+USB DB]Reverse U_CN5 pin definiens for ME's cable routing concern
P.39 [Felica]Reverse CN6 pin definiens for ME's cable routing concern
P.42 [T/P]Reverse CN7 pin definiens for ME's cable routing concern

(2008/11/15)

P.42 [T/P]Delete CN34,R530,R531 for cancel 12pin T/P solution

(2008/11/17)

P.18 [HDMI]Change CN31 from QJ5119L-NT03-4F to QJ1119L-NT03-4F(Dip type) for CONN issue

(2008/11/19)

P.18 [HDMI]Swap RP48 and RP50 for layout convenient
P.44 [HOLE]Change U_H3 size for ME's requested
P.44 [HOLE]Delete P_PAD5 and add P_H3 for ME's requested
P.44 [HOLE]DChange P_PAD4 size for ME's requested
P.44 [HOLE]Delete P_H1 and P_H2 for ME's requested

(2008/11/24)

P.47 [SYS Power (+3_3V/+5V)] Add test point TP152, TP156
P.48 [SYS Power(+1_5V/+1_05V))] Add test point TP161, TP176
P.50 [CPU_Vcore---ISL6266A] Add test point TP179
P.51 [Others power plane] Add test point TP132, TP133, TP157, TP160, TP177
P.52 [OVP protection] Add test point TP178

(2008/12/01)

P.46 [DCIN&Charger] Add test point TP34, TP37, TP38, TP39
P.46 [DCIN&Charger] Change PQ5 from AO4433 to SI4825DY-T1-E3 for EMI Issue
P.50 [CPU_Vcore---ISL6266A] Add PJ11 for power test

(2008/12/02)

P.53 Change U_CN5 pin33 and Pin34 to connect U_GND
P.06 [Clock Gen] Change test point type of TP153,TP154 for L6 requested
P.54 [Audio]Change U_R21,U_R23,U_R33,U_R36,U_R27,U_R29,U_R25,U_R26,U_R31 and U_R32 from 0201 to 0402 for L6 requested
P.17 [LVDS] Change SW1 from 8pin to 12pin for add Instant ON function

(2008/12/04)

P.09 [Cantiga] Change C819~C826 from 0201 to 0402 for improving EVT part missing issue
P.42 [T/P Buttom] Change SW2 and SW3 from 1BT001-1420L-001(160g) to 1BT001-1410L-001(100g)
P.18 [HDMI] Swap RP51 and RP49 for layout convenience.

(2008/12/05)

P.44 [HOLE] Change U_H3 from 1X-HOLE000-0935 to 1X-HOLE000-0959 for ME's requested
P.44 [HOLE] Change U_H1 from 1X-HOLE000-0905 to 1X-HOLE000-0958 for ME's requested
P.44 [HOLE] Change P_H3 from 1X-HOLE000-0936 to 1X-HOLE000-0960 for ME's requested

(2008/12/10)

P.25,26,29,32,35,38,43,46 [Test Pad] Add TP500~TP549 for BFT test pad
P.46 [DCIN] Delete PL6 for safety concern
P.29 [GLAN]NC R24,R25,U3,C16 and mount R616 for using M8057 internal EEPROM.
P.25 [EC]Add TP550,TP551 for prevent D17 reverse from L6's suggestion
P.40 [USB]Add TP552~TP554 for detect USB power switch leakage from L6's suggestion

(2008/12/12)

P.12 [Cantiga]Change CAP4 and CAP5 from 220u to 330u for support GM47
P.22 [ICH9]Delete R580,R354,R350,R364,U19,R587 because +3VALW is not being used.
P.51 [Other power plane]Change PQ40,PQ41 from SI2316DS-T1-E3 to SI7326DN-T1-E3 for overload test issue.
P.41 [BT]Change CN32 from QT510106-311H-7F to QT510106-312H-7F for ME's requested.

FOXCONN	HON HAI Precision Ind. Co., Ltd. CCPBG - R&D Division	
Title: History (1)		
Size: A3	Document Number: M850-1-02	Rev: 1.1
Date: Friday, April 17, 2009	Sheet 58 of 60	

M850 DVT

(2008/12/15)

P.46 [DCIN&Charger] Change PC193, PC194 from NC_0.1U_50V_K 0603 to 220P_50V_K 0603 for EMI request

P.46 [DCIN&Charger] Change PC133 from 0.1U_50V_K 0603 to 0.22U_25V_K 0603 for EMI request

P.46 [DCIN&Charger] Change PC23 from 680P_50V_K 0603 to 0.22U_25V_K 0603 for EMI request

(2008/12/18)

P.46 [DCIN&Charger] Change PC28, PC29 from 4.7U_25V_K 0805 to 4.7U_50V_K 1206 for reducing DC_IN inrush voltage.

P.46 [DCIN&Charger] Parallel PR32 and PR165 for reducing DC_IN inrush voltage.

P.46 [DCIN&Charger] Change PL1 from SPD8D43PT100M to PCMB063T-100MS for 2nd source implement.

P.48 [SYS Power(+1_5V/+1_05V)] Delete PJ4 for adding via in +1_05VRUN source.

(2008/12/19)

P.52 [OVP Protection] Add PR160 100K_J 0402 for MOR request.

P.12 [Cantiga]Change CAP4 and CAP5 to small size for MOR's requested.

P.38 [CAM]Change U41 to MAX4789EUK and delete C815,C816,R626 for VEDS current limit requested.

P.35 [FAN]Add F10 for prevent FAN sorot issue of MOR requested

P.16 [CRT]Change R418 and R424 from 22ohm to 33ohm for improve VEDS AGRB issue.

P.16 [CRT]Change CN2 from DZ11A91-SB281-4F to DZ11A91-SB2SN-4F for ME's requested.

(2008/12/20)

P.42 [TP]Change F7 from 0.5A to 0.35A for MOR's requested

P.39 [Felica]Change F6 from 0.5A to 0.35A for MOR's requested

P.39 [Felica]Add U49,C885,C886,R720 (NC) and R719 for reserve power switch for MOR's requested

P.32 [Audio]Change R493,R494 from 1k to 47k for Pi-Pi noise issue

(2008/12/22)

P.27 [Half Mini Card]Add R for RF team test VEDS,MP will delete it.

P.46 [DCIN&Charger]Change TP546~TP549 from 40mil to 60mil for BFT side requested.

P.52 [OVP]Change PC41 from 0.01uF to 1nF for Power_Abnormal_Conditions issue.

P.39 [Felica]Delete L60 for needless and SMT requested

P.40 [USB]Delete L61 for needless and SMT requested

(2008/12/23)

P.42 [LED] Change R385 from 33ohm to 51ohm for LED brightness issue

P.29 [Marvell GLAN]Delete TP538~TP545 for layout space concern

P.37 [PCI]Change C496 from 27p to 22p for improve crytal accuracy

P.20 [ICH9]Change footprint of D4 for SMT requested

P.21 [ICH9]Change footprint of D8 for SMT requested

P.22 [ICH9]Change footprint of D16 for SMT requested

(2008/12/24)

P.44 [HOLE]Change H5 from 1X-HOLE000-0925 to 1X-HOLE000-0913 for ME's requested

M850 PVT

(2008/12/26)

P.25 [EC] Add R722 for updating Instand On function.

(2009/02/09)

P.42 [T/P]Update the connection of SW2 and SW3 to correct T/P function

P.27 [WLAN]Update the connection of WLAN Switch to meet ME's requested

(2009/02/10)

P.46 [DCIN&Charger] Change PR32, PR165 from 1_J 1210 to 2_J 1210 for reducing DC_IN inrush voltage.

P.46 [DCIN&Charger] Change PC193, PC194 from 220P_50V_K 0603_NPO to 220P_50V_K 0402_NPO for PUR convenient.

P.46 [DCIN&Charger] Delete PR12 for unnecessary.

P.47 [SYS Power(+3_3V/+5V)] Delete PJ1, PJ2 for unnecessary.

P.48 [SYS Power(+1_5V/+1_05V)] Delete PJ3 for unnecessary.

P.49 [DDR2 Power(+1_8V/+0_9V)] Delete PJ5, PJ8 for unnecessary.

P.50 [CPU_Vcore---ISL6266A] Delete PR20, PR38, PR46, PR65, PJ11 for unnecessary.

P.50 [CPU_Vcore---ISL6266A] Change PC145 from MATSUSHITA, EEEFK1E101XP to CHEMI-CON, EMVE250ADA101MF80G for MOR request.

P.51 [Others power plane] Delete PR72, PR77, PR89 for unnecessary.

P.52 [OVP protection] Delete PR97, PR105, PR108 for unnecessary.

(2009/02/13)

P.21 [ICH9]Change R573 from mount to NC because BT_GPIO is not used for M850.

P.17 [LVDS]Change signal name "INST_ON_SW" to "INST_ON_SW#" because it's low active.

P.25 [EC]Change signal name "INST_ON_SW" to "INST_ON_SW#" because it's low active.

(2009/02/19)

P.35 [Thermal]NC U14 and C374 for unnecessary by thermal evaluation.

P.42 [LED]Change R600 from 120ohm to 150ohm to satisfy brightness requested.

P.39 [Felica]Change F6 from 0.35A to 0.25A for felica module heated concern.

P.25 [EC]Add R723 for SPI ROM datasheet updated.

P.44 [HOLE]Change H4 from 1X-HOLE000-0926 to 1X-HOLE000-1052 for ME's requested.

P.44 [HOLE]Change H12 from 1X-HOLE000-0915 to 1X-HOLE000-1051 for ME's requested.

P.56 [USB]Change U_CN1 and U_CN2 form UB11193-C1308-4F to UB111S3-C1GS6-4H for ME's requested.

(2009/02/20)

P.52 [OVP protection] Change PR55 from 14.7K_F 0402 to 18.2K_F 0402 for BT+ OVP setting.

P.52 [OVP protection] Change PR143 from 20K_F 0402 to 26.1K_F 0402 for +5VALW OVP setting.

P.52 [OVP protection] Change PR144 from 47K_F 0402 to 80.6K_F 0402 for +3VALW OVP setting.

P.16 [CRT] Change CN2 from DZ11A91-SB2SN-4F to DZ11A91-SA2SN-4H for ME's requested.

P.39 [Felica]Change F6 from 0.25A to 0.125A for felica module heated concern.

M850 PVT

(2009/02/23)

P.42 [TP]Change SW2 and SW3 from 19-1BT0011-1003 to 19-SKHM0KE-1000 for ME's requested.

P.12 [Cantiga]Change CAP4 and CAP5 from 330uF to 220uF for no use GM47.

P.46 [DCIN]Move PC13,PC14,PC15 to the another side of PL8 for improving EMC.

P.41 [BT]Change CN32 from QT510106-312H-7F to QT510106-312H-7H for ME's requested.

P.37 [ILINK]Change CN11 from UV31413-RU81P-7F to UV31413-RU82P-7H for ME's requested.

(2009/02/24)

P.40 [USB]Change CN9 from UB111M3-CA4S4-7F to UB111M3-CAGS4-7H for MOR's requested.

(2009/02/25)

P.44 [HOLE]Change P_H3 from 1X-HOLE000-0960 to 1X-HOLE000-1054 for EMC's requested.

P.25 [EC]Change R722,R613,R475,R628,R435,R431(10K) from 0201 to 0402 for SMT's requested.

P.25 [EC]Change R173,R197,R203,R75,R124,R442,R440,R447,R432(100K) from 0201 to 0402 for SMT's requested.

P.25 [EC]Change R476(4.7K) from 0201 to 0402 for SMT's requested.

P.26 [Flash ROM]Change R233(0) from 0201 to 0402 for SMT's requested.

(2009/02/25b)

P.39 [Modem]Add TP600~TP606 for BFT test requeste

(2009/02/26)

P.40 [USB]Change C810 from Y5V to X5R for MOR VEDS requested

P.32 [Audio]Delete Q27,R450,R614,Q8,R98,R615 for unnecessary to improve BFT test point.

M850 MP

(2009/04/01)

P.08 [Cantiga]Add C867(0.01uF) to improve P8700 CPU with GM45 will hang up issue.

P.25 [EC]Signal symbol "OVT_GFX#" change to two-way type for avoiding confusion from SW's suggestion.

(2009/04/08)

P.16 [CRT]Change CN2 from FOX_DZ11A91-SA2SN-4H to FOX_DZ11A91-SB2SN-4F (same as DVT used) for CONN discoloration issue.

P.40 [USB2.0]Change CN9 from FOX_UB111M3-CAGS4-7H to FOX_UB111M3-CA4S4-7F (same as DVT used) for CONN discoloration issue.

P.56 [USB DB]Change U_CN1 and U_CN2 from FOX_UB111S3-C1GS6-4H to FOX_UB11193-C1304-4F for CONN discoloration issue.

(2009/04/09)

P.37 [ILINK]Change CN11 from UV31413-RU82P-7H to UV31413-WU82P-7F for CONN discoloration issue.

(2009/04/13)

P.26 [Flash ROM/SPI]Change CN26,C308,R221,U11 from mount to NC and R233 from NC to mount for no need X-BUS interface in MP.

P.26 [Flash ROM/SPI]Change LABLE1 from NC to mount for AMI certificate.

FOXCONN	HON HAI Precision Ind. Co., Ltd. CCPBG - R&D Division	
Title	History (3)	
Size: A3	Document Number: M850-1-02	Rev: 1.1
Date: Friday, April 17, 2009	Sheet 60 of 60	

www.s-manuals.com