MS-1412 VER:2.0
Intel Yonha CPU+ ATi RC410ME&SB450 Chipset

01:BLOCK DIAGRAM
02:PLATFORM
03:Yonah-1 CPU (HOST BUS)
04:Yonah-2 CPU (POWER/GND)
05:Yonah-3
06:RC410ME(HOST)
07:RC410ME(DDR)
08:RC410ME(VIDEO/PCI-E)
09:RC410ME(POWER/STRAPS)
10:DDR2_SODIMM0
11:DDR2_SODIMM1
12:DDR2_Termination
13:CLOCK GEN(ICS 951413CGLFTB)
14:CRT & LVDS & TV CONN
15:SB450(AZALIA/USB)
16:SB450(PCI/CPU/LPC/RTC)
17:SB450(SATA/IDE/POWER)
18:SB450(SATA)
19:SB450(HW STRAPS)
20:USB2.0 CON x 3
21:HDD & CDROM Connect
22:PCI BUS/1394
23:CARDBUS
24:PCI LAN RTL8100C
25:MINI PCI
26:NEW CARD& MDC Connect
27:CODEC/AMP
28:AUDIO/AMP
29:KBC/EC/UP
30:M_Battery Select
31:M_Battery Charger
32:M_System Power
33:M_VDDR & +1.8VDIMM
34:M_1.05V,1.2V
35:M_CPU power
36:Screw1
37:Screw2
38:EMI
39:KBC POWER SEQUENCE
40:POWER SEQUENCE

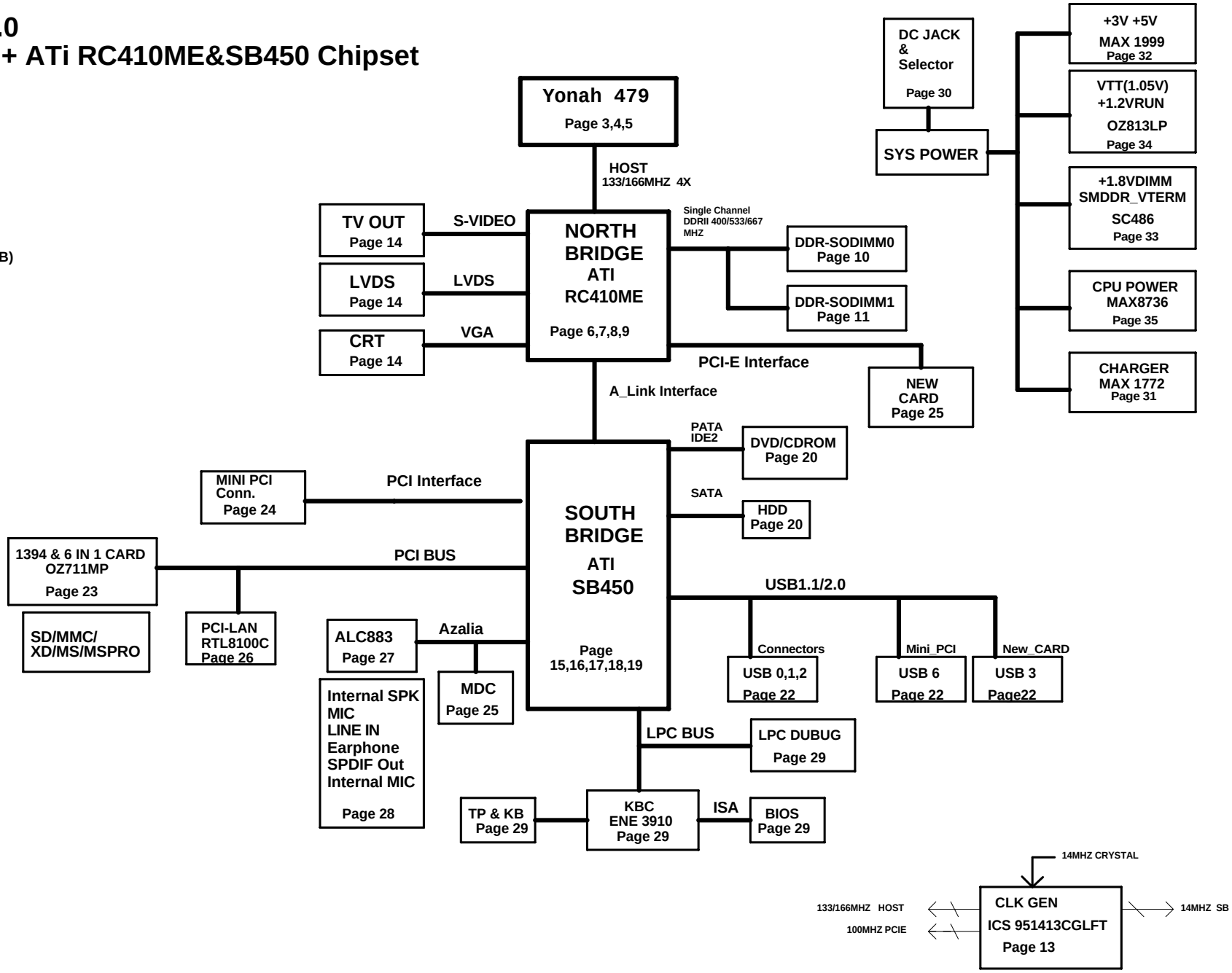

MICRO-STAR INT'L CO.,LTD.

Title: BLOCK DIAGRAM

Size: C | Document Number: MS-1412 | Rev: 1.1

Date: Wednesday, November 29, 2006 | Sheet 1 of 41

Voltage Rails

Voltage	Description	Control Signal
PWR_SRC	AC ADAPTER OR BATTERY IN	
VHCORE	Core Voltage for Processor	RUNPWROK
VTT	1.05 rail for Processor & RC410ME I/O	RUND
+1.2VRUN	1.2V powe rail RC410ME, CRT AND LVDS (off in S3-S5)	RUND
+3VRUN	3.3V switched power rail(off in S3-S5)	RUND
+5VRUN	5.0V switched power rail(off in S3-S5)	RUND
+1.8VDIMM	1.8V power rail DDR2 (off in S4-S5)	DIMM_ON
SMDDR_VTERM	0.9V DDR Termination voltage (off in S4-S5)	RUN_ON
+1.8VSUS	1.8V power rail for SB450	+3VSUS
+3VSUS	3.3V power rail (off in S4-S5)	SUS_ON
+5VSUS	5.0V power rail (off in S4-S5)	SUS_ON
+3VALW	3.3V always on power rail	PWR_SRC
+5VALW	5.0V always on power rail	PWR_SRC

Voltage	Description	Control Signal
ADD5V	5.0V Power rail Audio codec(off in S3-S5)	RUND

GND	DIGTIAL GROUD	
AGND	AUDIO GND	
PGND	POWER Analogy GND	

POWER STATES

STATE \ SIGNAL	SLP_S3#	SLP_S4#	SLP_S5#	+V*ALWAYS	+V*SUS	+V*RUN	Clocks
Full ON	HIGH	HIGH	HIGH	ON	ON	ON	ON
S1M(Power On Suspend)	HIGH	HIGH	HIGH	ON	ON	ON	LOW
S3(Suspend to RAM)	LOW	HIGH	HIGH	ON	ON	OFF	OFF
S4(Suspend to Disk)	LOW	LOW	HIGH	ON	OFF	OFF	OFF
S5 / Soft OFF	LOW	LOW	LOW	ON	OFF	OFF	OFF

Note : WHEN AC MODE , System turn on then +V*SUS will always keep high

MICRO-STAR INT'L CO.,LTD.

Title: PLATFORM

Size: Custom | Document Number: MS-1412 | Rev: 1.1

Date: Wednesday, November 29, 2006 | Sheet 2 of 41

06'05'26 ABLE

Cap close to thermal sensor

BSEL[2]	BSEL[1]	BSEL[0]	BCLK
L	L	L	RESERVED
L	L	H	133MHZ
L	H	L	RESERVED
L	H	H	166MHZ

Close to CPU socket

0.5" max length
25 MIL AWAY FROM HIGH SPEED SIGNAL
HCOMP0,2==>18MIL
HCOMP1,3==>5MIL

05'11'16 ABLE

05'10'28 ABLE

05'10'20 ABLE

Title	Yonah-1 (HOST BUS)
Size	Custom
Document Number	MS-1412
Rev	1.1
Date:	Wednesday, November 29, 2006
Sheet	3 of 41

MICRO-STAR INT'L CO.,LTD.

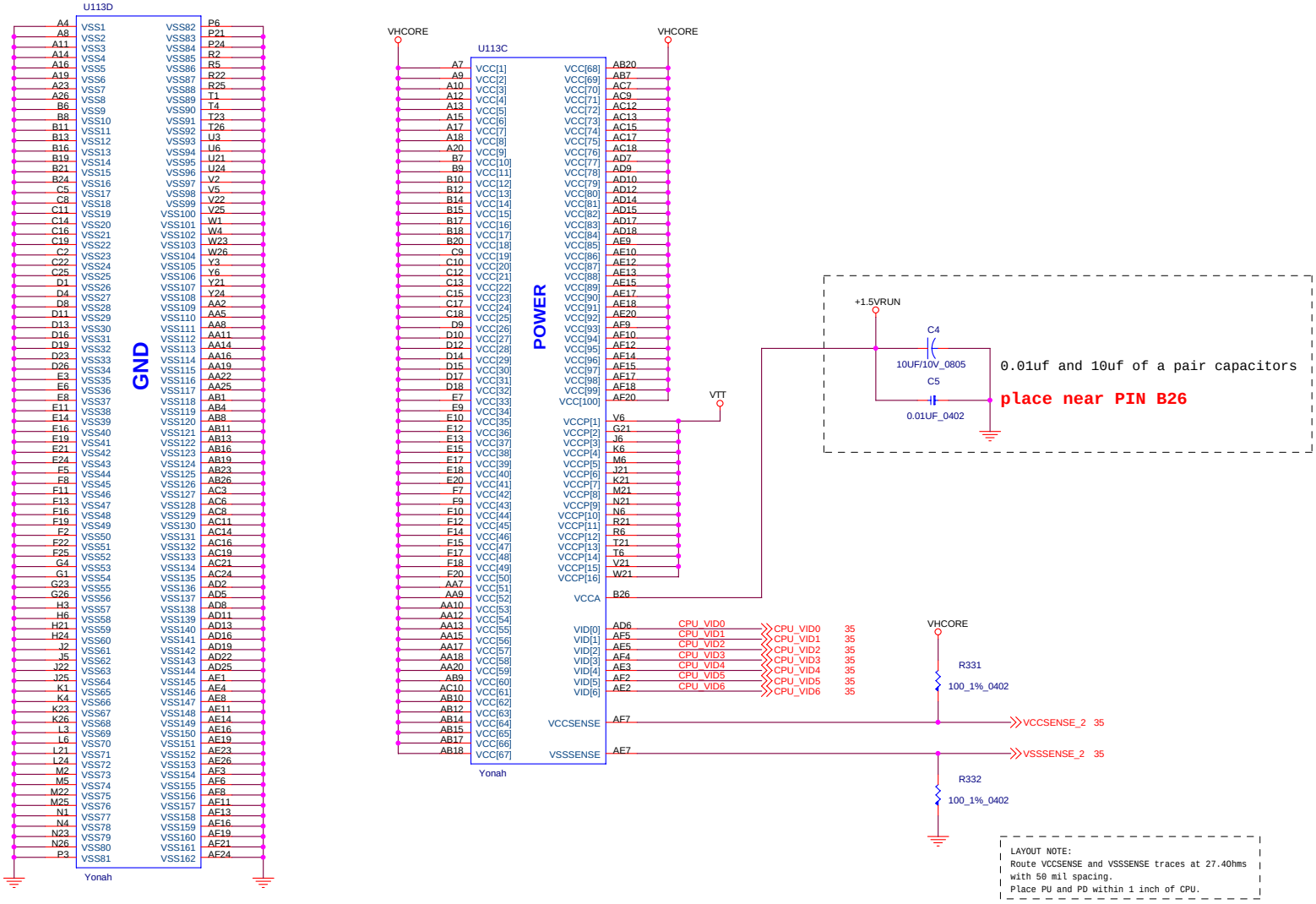

MICRO-STAR INT'L CO.,LTD.

Title: Yonah-2 (Power / GND)

Size: Custom | Document Number: MS-1412 | Rev: 1.1

Date: Wednesday, November 29, 2006 | Sheet 4 of 41

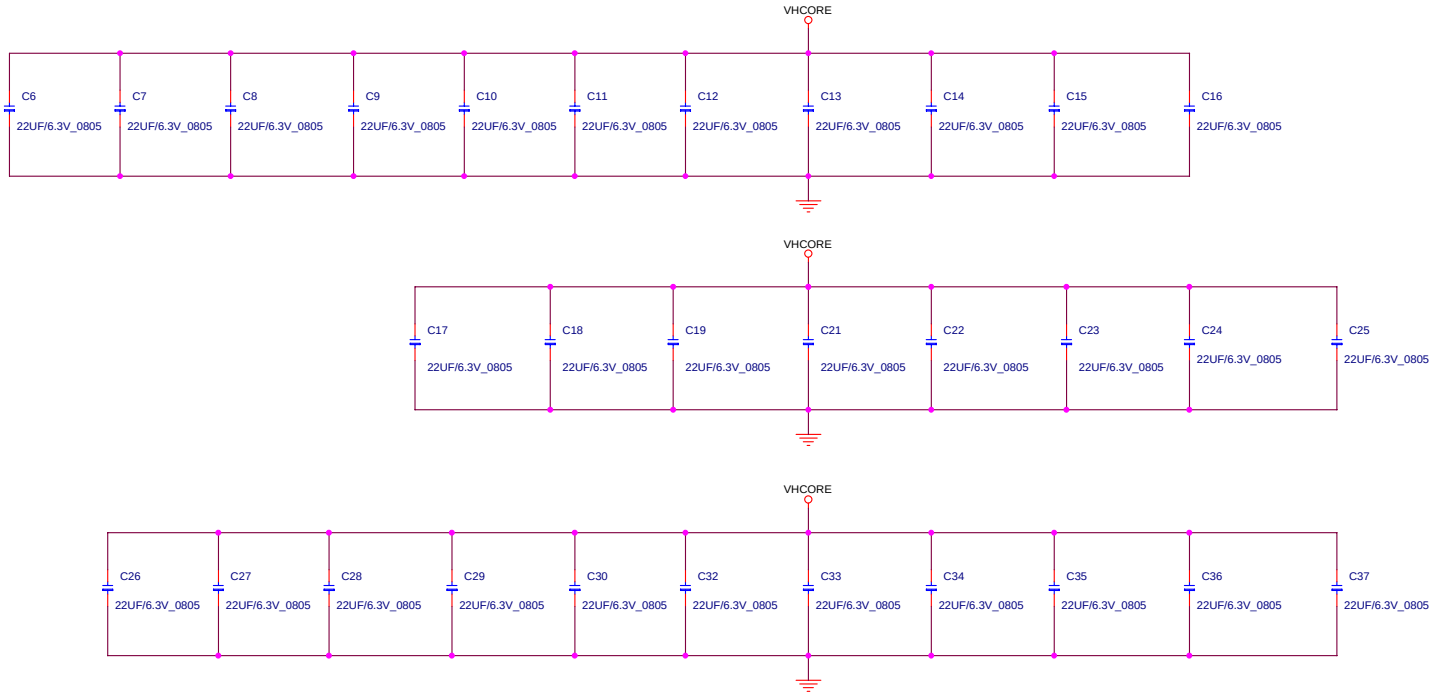

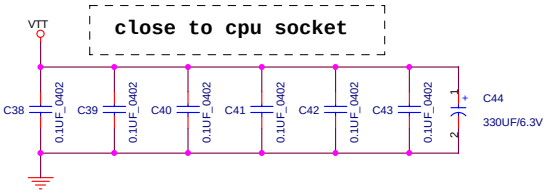

電容要放對襟

MICRO-STAR INT'L CO.,LTD.

Title: Yonah-3

Size: Custom | Document Number: MS-1412 | Rev: 1.1

Date: Wednesday, November 29, 2006 | Sheet 5 of 41

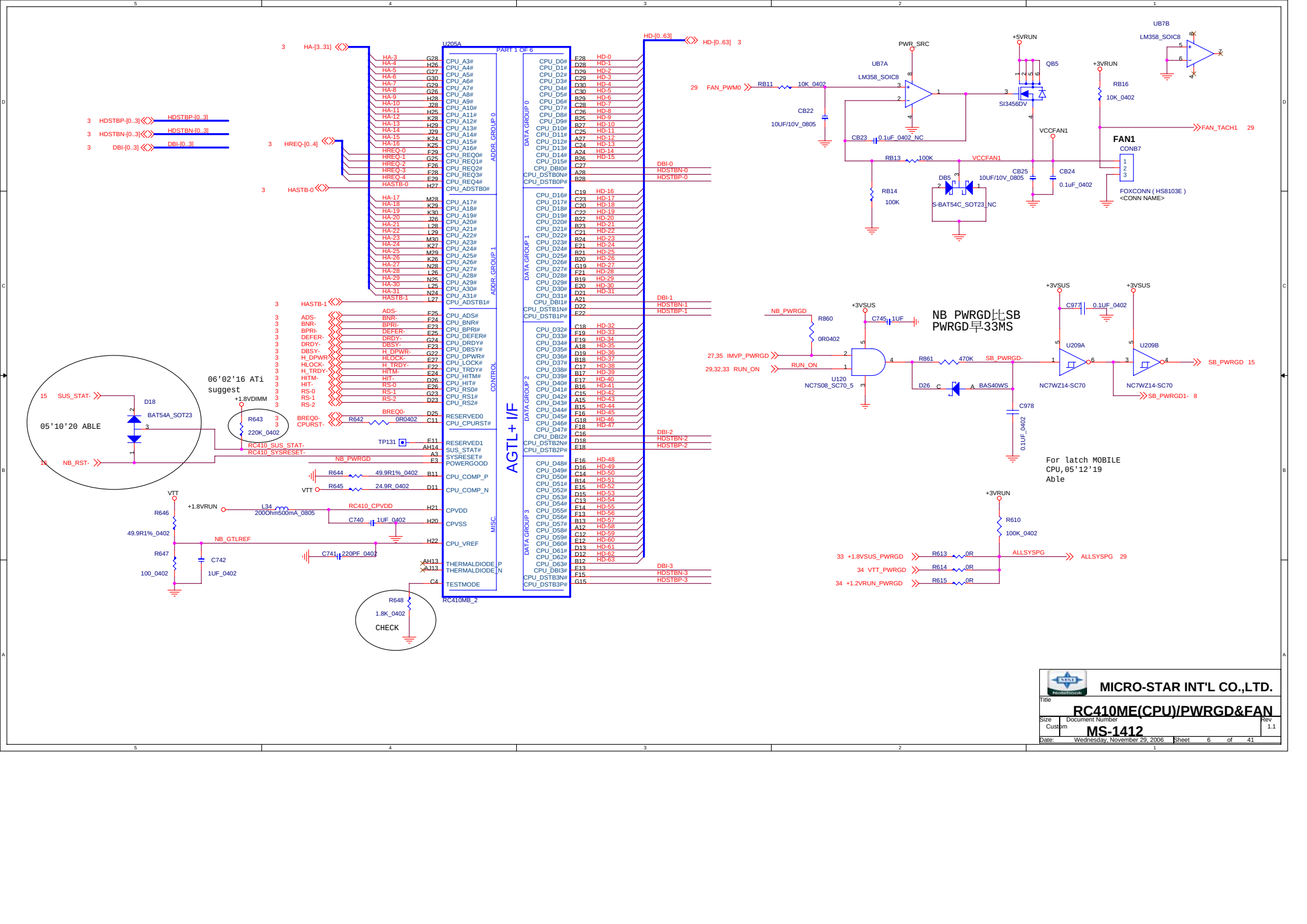

MICRO-STAR INT'L CO.,LTD.

Title: RC410ME(CPU)/PWRGD&FAN

Size: Custom | Document Number: MS-1412 | Rev: 1.1

Date: Wednesday, November 29, 2006 | Sheet 6 of 41

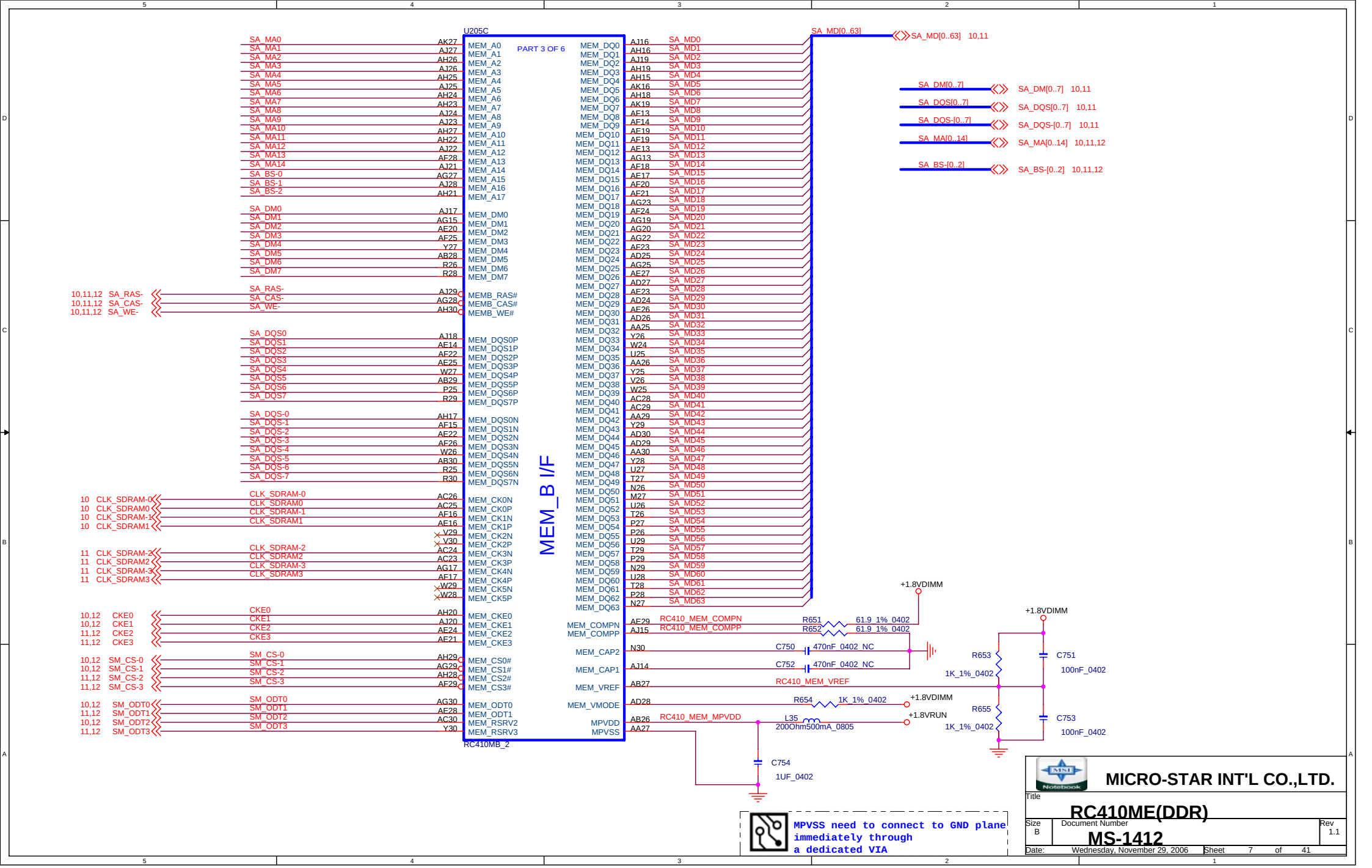

MICRO-STAR INT'L CO.,LTD.		
Title: RC410ME(DDR)		
Size: B	Document Number: MS-1412	Rev: 1.1
Date: Wednesday, November 29, 2006	Sheet 7 of 41	

PUT AVDD, AVDDDI, AVDDQ, PLVDD DECOUPLING CAPS ON THE BOTTOM SIDE, CLOSE TO BALLS

RSET resistor R246 need 10mils trace with at least 10mils spacing. Also need to connect GND at AVSSQ HF cap.

解CRT有水波汶
06'02'06 Able

For EMI

EMI request 05'12'30

For EMI

For EMI

For latch MOBILE CPU,05'12'19 Able

DAC_SCL: CPU VCC
DEFAULT:0
0: MOBILE CPU
1: DESKTOP CPU

DAC_SCL is totem-pole output

STRP_DATA:Debug strap
DEFAULT:1
0: MEMORY CHANNEL STRAPING
1: E2PROM STRAPING

06'02'16 ATi suggest

4.7k can't down to 0V, so change to 1k. 05'12'19 Able

設定外頻3隻腳其中依之HSYNC#,VSYNC#爲另外兩支,亦有接到南橋

BMREQ#&HSYNC&VSYNC: FSB CLK SPEED

000: 100 MHZ
001: 133 MHZ (CK410)
010: --- MHZ
011: 166 MHZ (CK410)
100: 100 MHZ
101: 100 MHZ (CK410)
110: --- MHZ
111: --- MHZ

Note1: For A11, 100M and 133M need to strap at 101or 001 .

Note2: A12 changed 101 to be 100MHZ instead of 133MHZ in A11 ASIC.

MICRO-STAR INT'L CO.,LTD.

Title: RC410ME(VIDEO)&PCI-E

Size: Custom | Document Number: MS-1412 | Rev: 1.1

Date: Wednesday, November 29, 2006 | Sheet 8 of 41

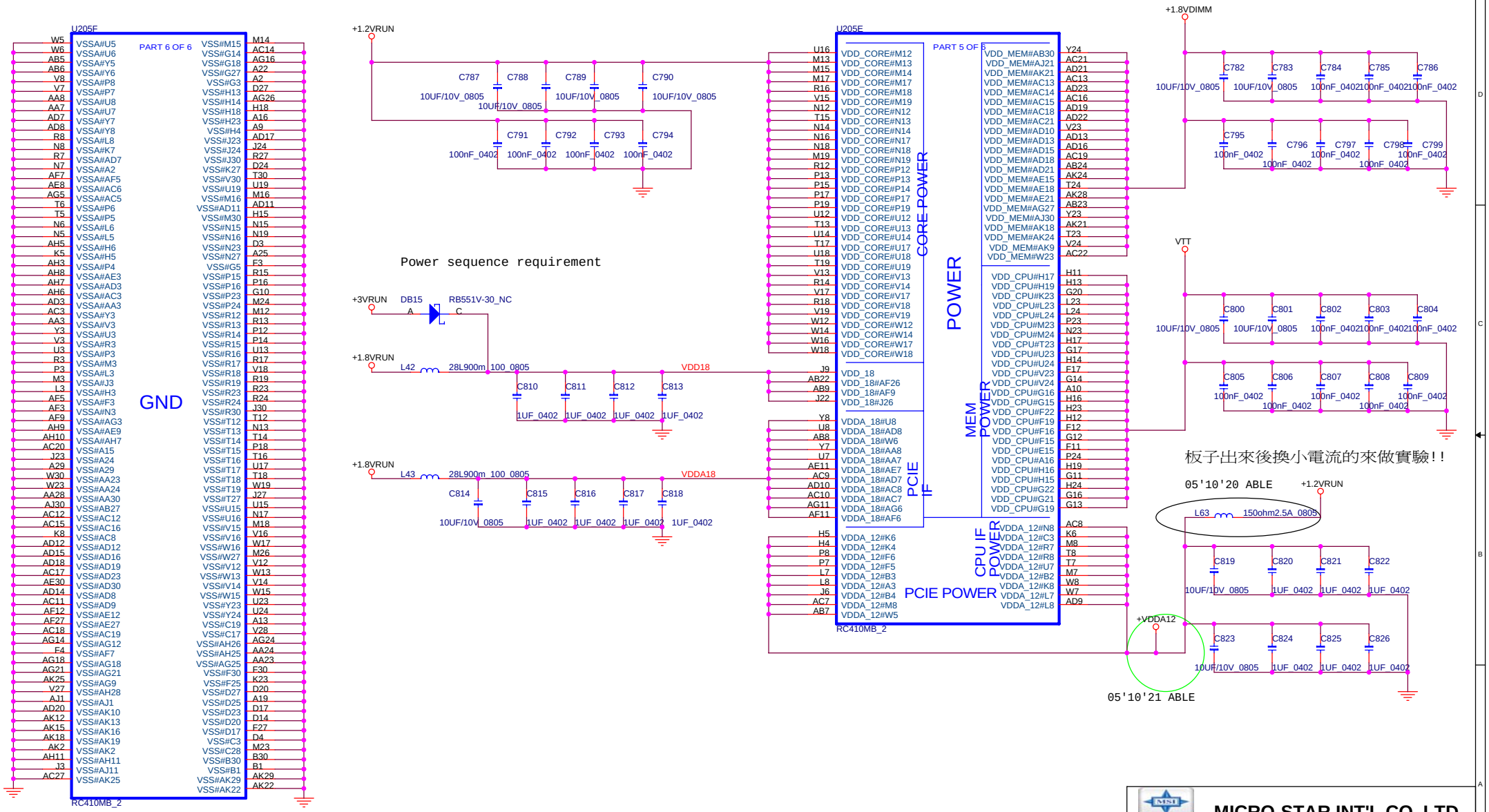

MICRO-STAR INT'L CO.,LTD.	
Title	RC410ME(POWER)
Size: Custom	Document Number: MS-1412
Rev	1.1
Date: Wednesday, November 29, 2006	Sheet 9 of 41

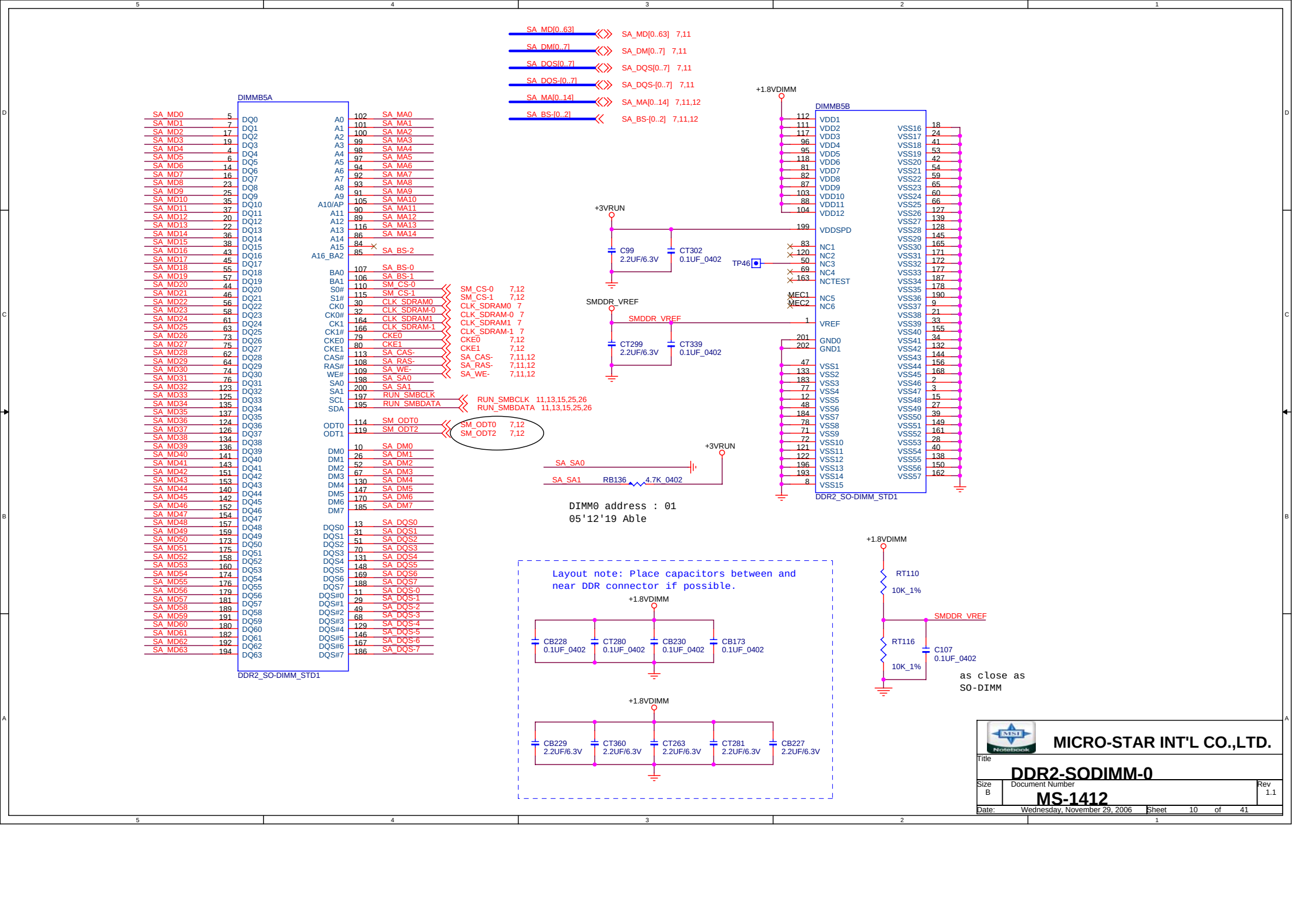
SA_MD[0..63] SA_MD[0..63] 7,11
SA_DM[0..7] SA_DM[0..7] 7,11
SA_DQS[0..7] SA_DQS[0..7] 7,11
SA_DQS-[0..7] SA_DQS-[0..7] 7,11
SA_MA[0..14] SA_MA[0..14] 7,11,12
SA_BS-[0..2] SA_BS-[0..2] 7,11,12
DIMMB5A
DDR2_SO-DIMM_STD1
SM_CS-0 7,12
SM_CS-1 7,12
CLK_SDRAM0 7
CLK_SDRAM-0 7
CLK_SDRAM1 7
CLK_SDRAM-1 7
CKE0 7,12
CKE1 7,12
SA_CAS- 7,11,12
SA_RAS- 7,11,12
SA_WE- 7,11,12
RUN_SMBCLK 11,13,15,25,26
RUN_SMBDATA 11,13,15,25,26
SM_ODT0 7,12
SM_ODT2 7,12
+1.8VDIMM
DIMMB5B
+3VRUN
C99 2.2UF/6.3V
CT302 0.1UF_0402
TP46
SMDDR_VREF
CT299 2.2UF/6.3V
CT339 0.1UF_0402
SA_SA0
SA_SA1
RB136 4.7K_0402
DIMM0 address : 01
05'12'19 Able
Layout note: Place capacitors between and near DDR connector if possible.
CB228 0.1UF_0402
CT280 0.1UF_0402
CB230 0.1UF_0402
CB173 0.1UF_0402
CB229 2.2UF/6.3V
CT360 2.2UF/6.3V
CT263 2.2UF/6.3V
CT281 2.2UF/6.3V
CB227 2.2UF/6.3V
RT110 10K_1%
RT116 10K_1%
C107 0.1UF_0402
as close as SO-DIMM
MICRO-STAR INT'L CO.,LTD.
Title
DDR2-SODIMM-0
Size B
Document Number MS-1412
Rev 1.1
Date: Wednesday, November 29, 2006
Sheet 10 of 41

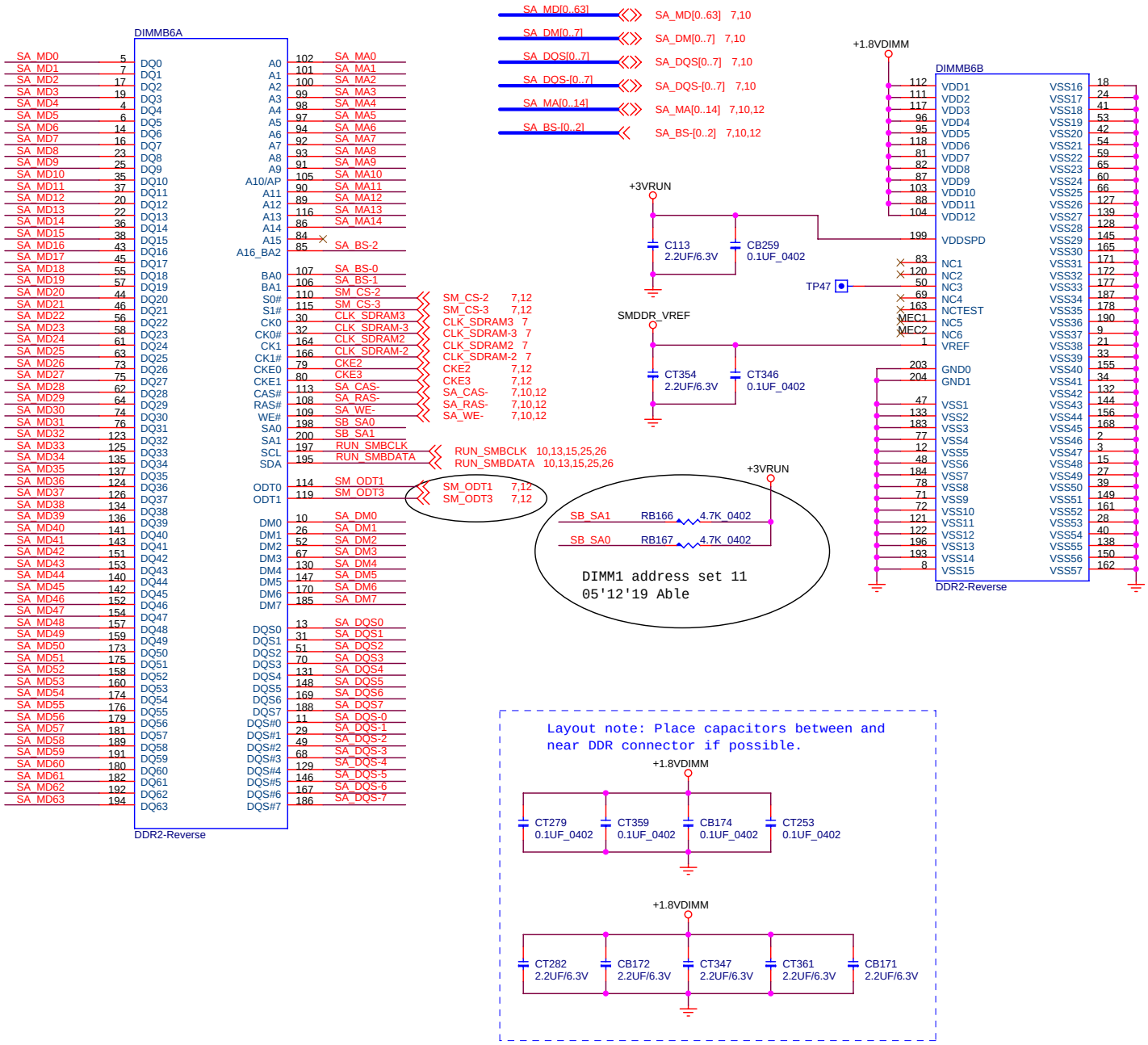

MICRO-STAR INT'L CO.,LTD.

Title: DDR2-SODIMM-1

Size: B | Document Number: MS-1412 | Rev: 1.1

Date: Wednesday, November 29, 2006 | Sheet 11 of 41

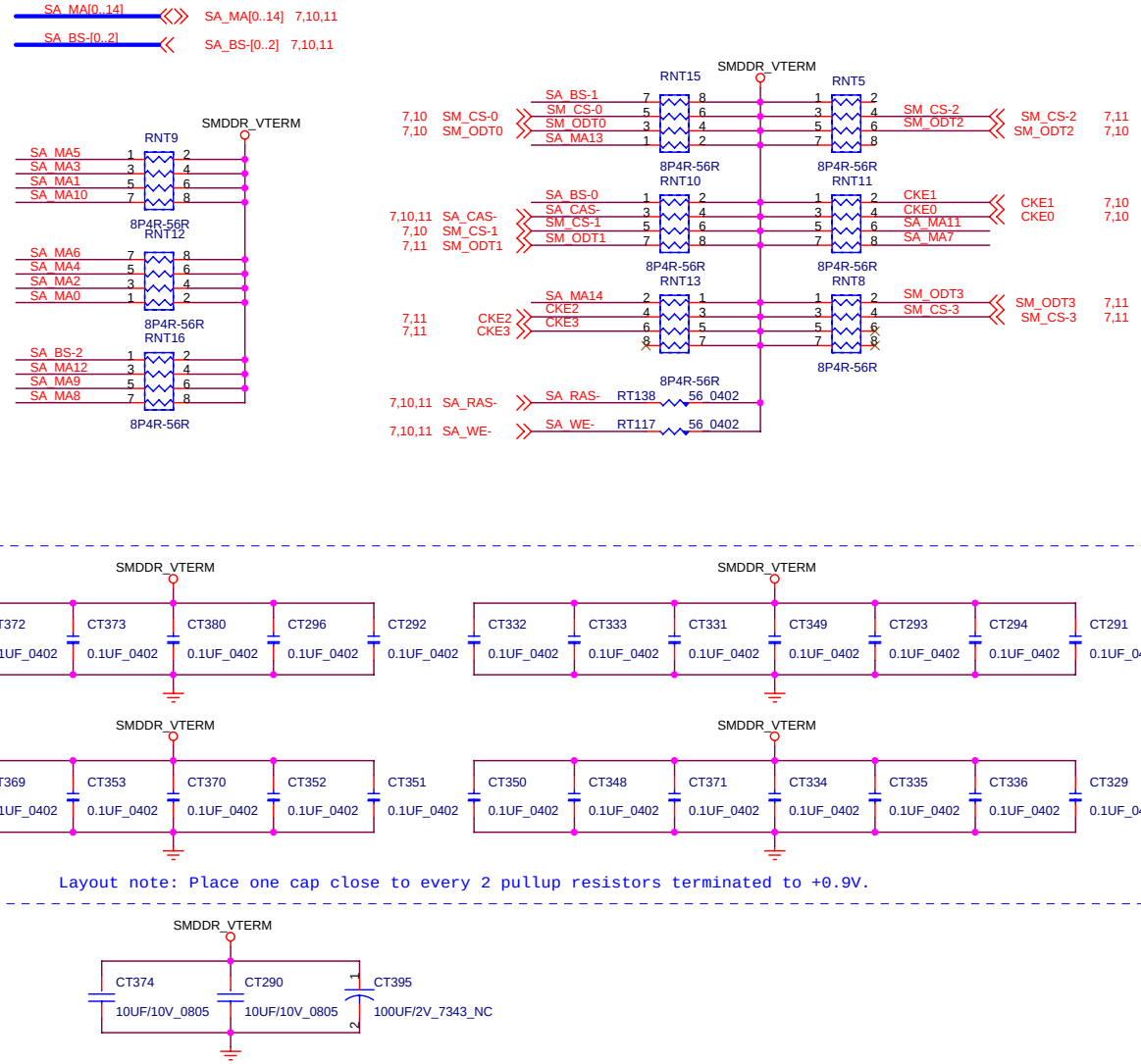

MICRO-STAR INT'L CO.,LTD.

Title: DDR2 Terminator

Size: B | Document Number: MS-1412 | Rev: 1.1

Date: Wednesday, November 29, 2006 | Sheet 12 of 41

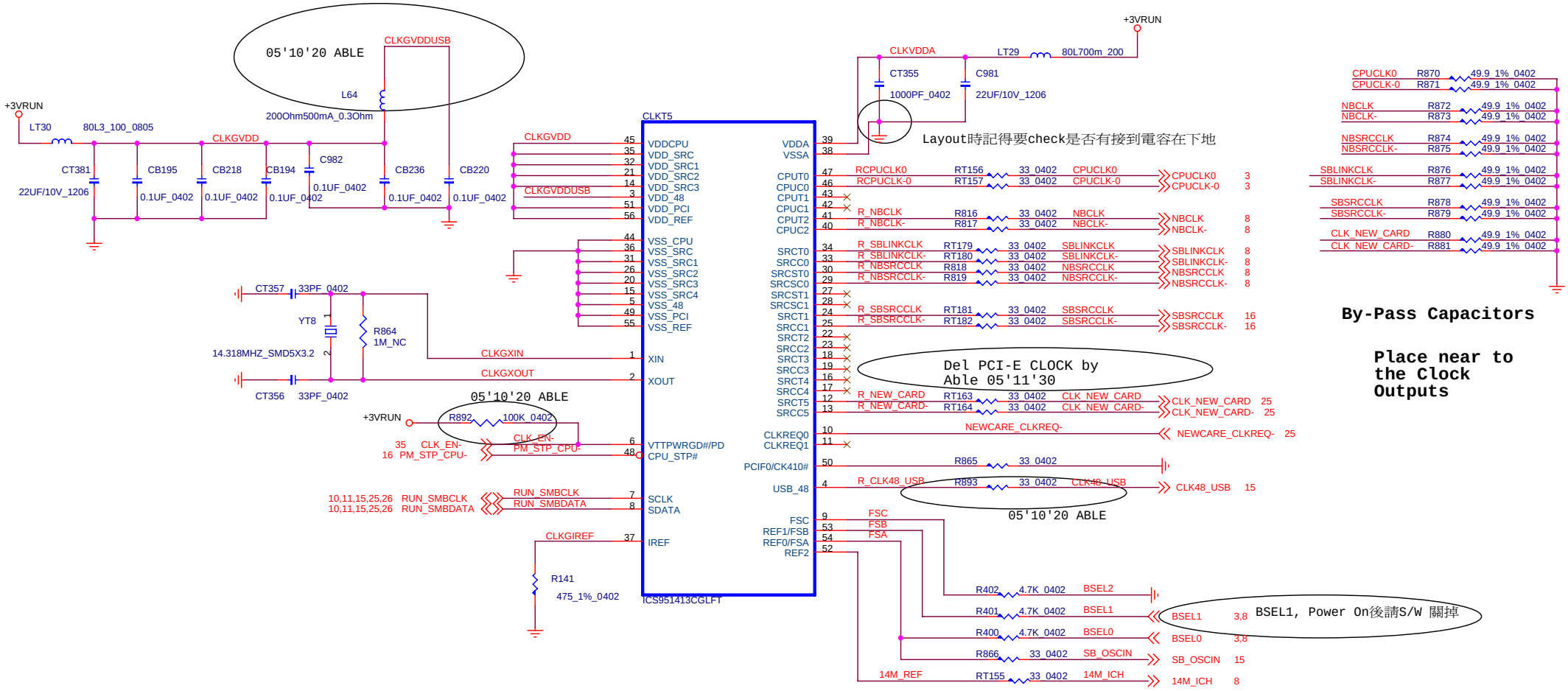

CK410 FREQUENCY SELECT TABLE(MHZ)

FSC BSEL2	FSB BSEL1	FSA BSEL0	CPU	SRC	PCI	REF
1	0	1	100	100	33	14.31
0	0	1	133	100	33	14.31
0	1	1	166	100	33	14.31
0	1	0	200	100	33	14.31
0	0	0	266	100	33	14.31
1	0	0	333	100	33	14.31
1	1	0	400	100	33	14.31
1	1	1	Resv	100	33	14.31

MICRO-STAR INT'L CO.,LTD.

Title: CLOCK Generator (ICS951413CGLFT)

Size: B | Document Number: MS-1412 | Rev: 1.1

Date: Wednesday, November 29, 2006 | Sheet 13 of 41

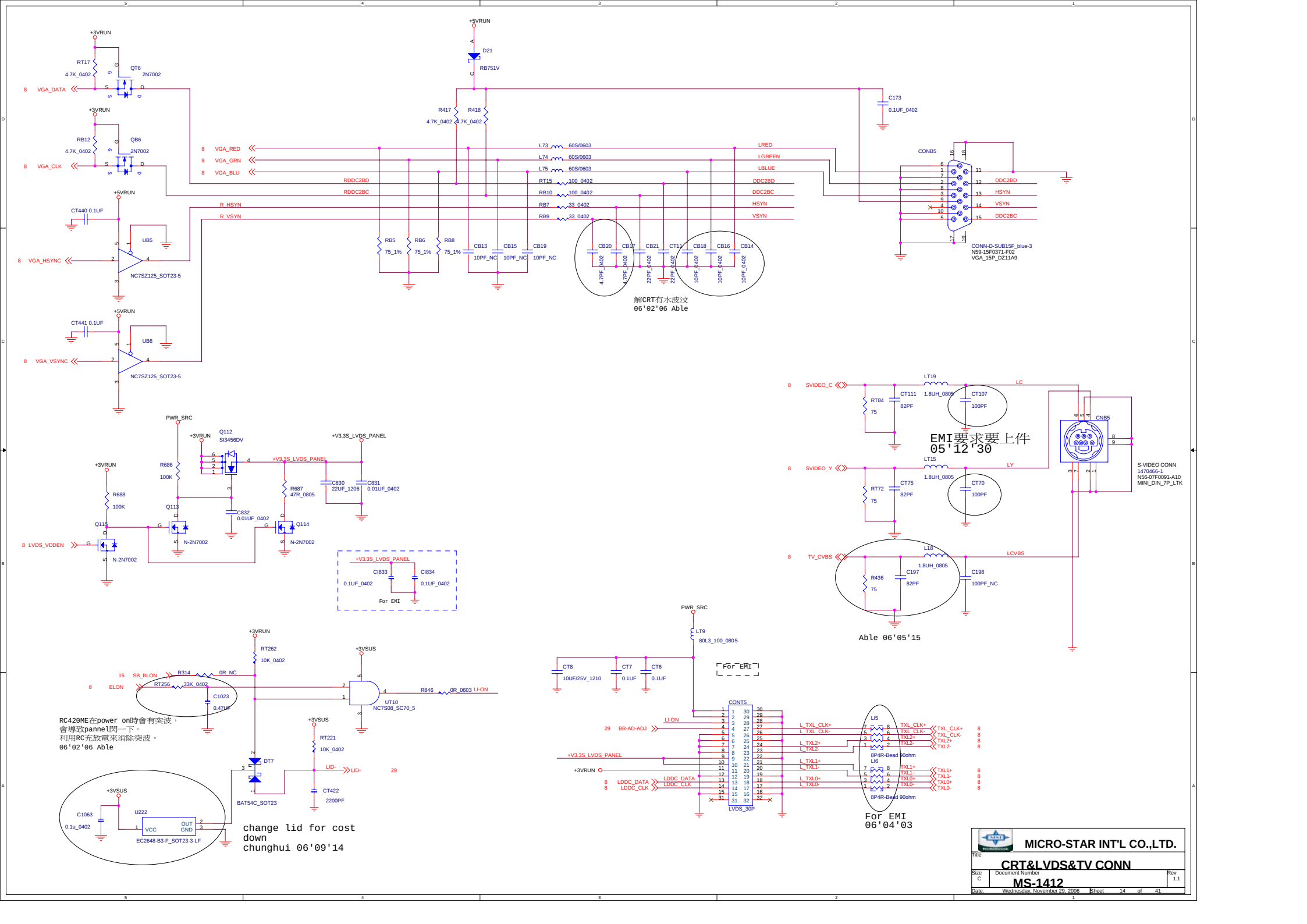
+3VRUN
RT17
4.7K_0402
QT6
2N7002
8 VGA_DATA
RB12
4.7K_0402
QB6
2N7002
8 VGA_CLK
+5VRUN
CT440 0.1UF
UB5
8 VGA_HSYNC
NC7SZ125_SOT23-5
CT441 0.1UF
UB6
8 VGA_VSYNC
NC7SZ125_SOT23-5
R_HSYN
R_VSYN
+5VRUN
D21
RB751V
R417 4.7K_0402
R418 4.7K_0402
C173 0.1UF_0402
8 VGA_RED
8 VGA_GRN
8 VGA_BLU
L73 60S/0603
L74 60S/0603
L75 60S/0603
LRED
LGREEN
LBLUE
RDDC2BD
RDDC2BC
RT15 100_0402
RB10 100_0402
RB7 33_0402
RB9 33_0402
DDC2BD
DDC2BC
HSYN
VSYN
RB5 75_1%
RB6 75_1%
RB8 75_1%
CB13 10PF_NC
CB15 10PF_NC
CB19 10PF_NC
CB20 4.7PF_0402
CB17 4.7PF_0402
CB21 22PF_0402
CT11 22PF_0402
CB18 10PF_0402
CB16 10PF_0402
CB14 10PF_0402
CONB5
DDC2BD
HSYN
VSYN
DDC2BC
CONN-D-SUB15F_blue-3
N59-15F037I-F02
VGA_15P_DZ11A9
解CRT有水波汶
06'02'06 Able
PWR_SRC
+3VRUN
Q112
SI3456DV
+V3.3S_LVDS_PANEL
R686 100K
R688 100K
R687 47R_0805
C830 22UF_1206
C831 0.01UF_0402
C832 0.01UF_0402
Q113
Q114
Q115
N-2N7002
8 LVDS_VDDEN
+V3.3S_LVDS_PANEL
CI833 0.1UF_0402
CI834 0.1UF_0402
For EMI
8 SVIDEO_C
8 SVIDEO_Y
8 TV_CVBS
LT19 1.8UH_0805
LT15 1.8UH_0805
L18 1.8UH_0805
LC
LY
LCVBS
RT84 75
CT111 82PF
CT107 100PF
RT72 75
CT75 82PF
CT70 100PF
R436 75
C197 82PF
C198 100PF_NC
CNB5
S-VIDEO CONN
1470466-1
N56-07F0091-A10
MINI_DIN_7P_LTK
EMI要求要上件
05'12'30
Able 06'05'15
+3VRUN
RT262 10K_0402
15 SB_BLON
8 ELON
R314 0R_NC
RT256 33K_0402
C1023 0.47UF
+3VSUS
UT10
NC7S08_SC70_5
R846 0R_0603 LI-ON
RC420ME在power on時會有突波，
會導致pannel閃一下。
利用RC充放電來消除突波。
06'02'06 Able
+3VSUS
RT221 10K_0402
DT7
BAT54C_SOT23
LID-
29
C1063 0.1u_0402
U222
VCC
OUT
GND
EC2648-B3-F_SOT23-3-LF
change lid for cost
down
chunghui 06'09'14
PWR_SRC
LT9
80L3_100_0805
CT8 10UF/25V_1210
CT7 0.1UF
CT6 0.1UF
For EMI
CONT5
LI-ON
29 BR-AD-J
+V3.3S_LVDS_PANEL
+3VRUN
8 LDDC_DATA
8 LDDC_CLK
LVDS_30P
L_TXL_CLK+
L_TXL_CLK-
L_TXL2+
L_TXL2-
L_TXL1+
L_TXL1-
L_TXL0+
L_TXL0-
LI5
LI6
8P4R-Bead 90ohm
TXL_CLK+
TXL_CLK-
TXL2+
TXL2-
TXL1+
TXL1-
TXL0+
TXL0-
For EMI
06'04'03
MICRO-STAR INT'L CO.,LTD.
Title
CRT&LVDS&TV CONN
Size C
Document Number
MS-1412
Rev 1.1
Date: Wednesday, November 29, 2006
Sheet 14 of 41

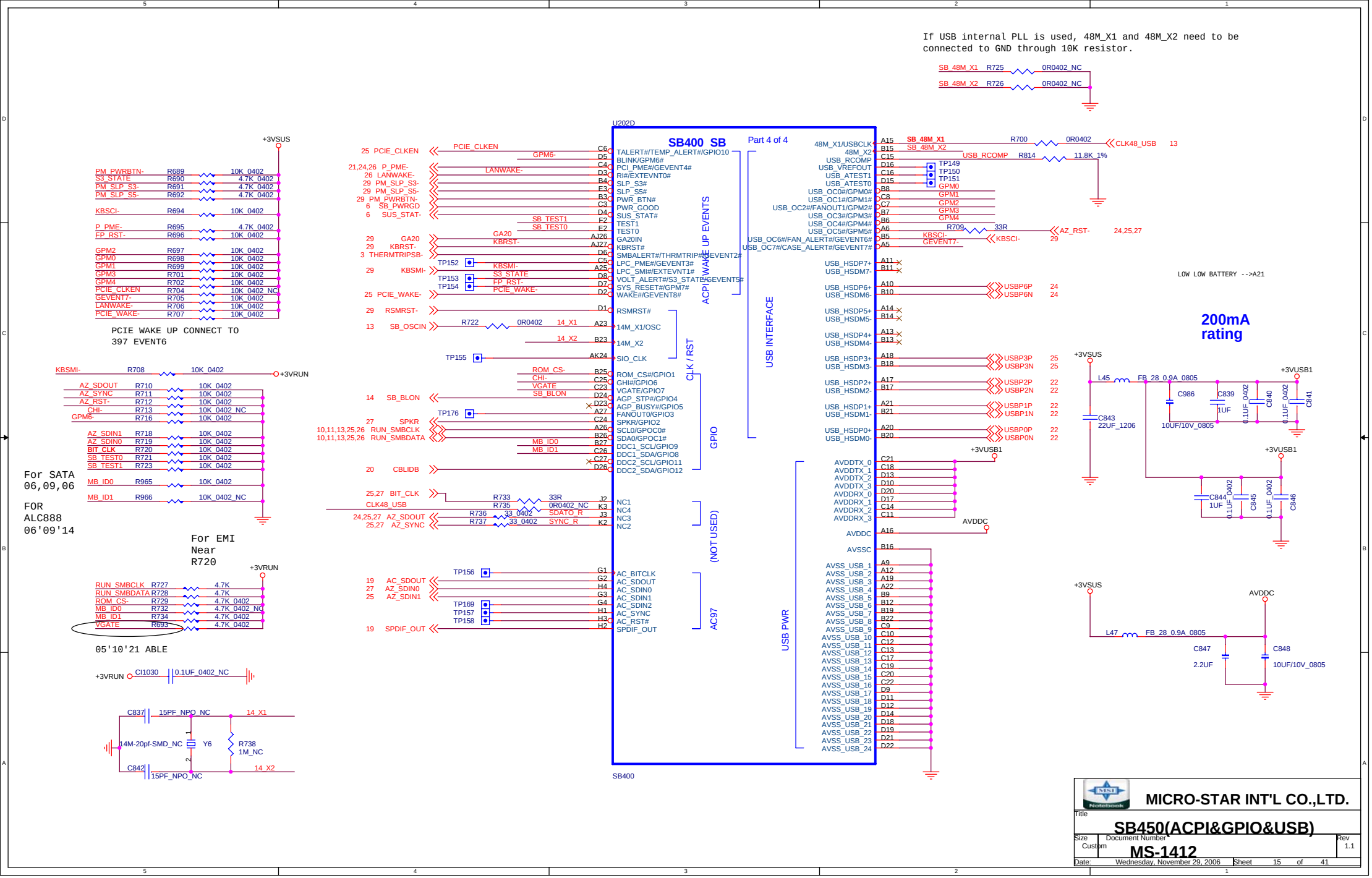
If USB internal PLL is used, 48M_X1 and 48M_X2 need to be connected to GND through 10K resistor.
SB 48M_X1 R725 0R0402_NC
SB 48M_X2 R726 0R0402_NC
U202D
SB400 SB
Part 4 of 4
ACPI/WAKE UP EVENTS
USB INTERFACE
CLK / RST
GPIO
(NOT USED)
AC97
USB PWR
SB400
+3VSUS
PM_PWRBTN- R689 10K_0402
S3_STATE R690 4.7K_0402
PM_SLP_S3- R691 4.7K_0402
PM_SLP_S5- R692 4.7K_0402
KBSCI- R694 10K_0402
P_PME- R695 4.7K_0402
FP_RST- R696 10K_0402
GPM2 R697 10K_0402
GPM0 R698 10K_0402
GPM1 R699 10K_0402
GPM3 R701 10K_0402
GPM4 R702 10K_0402
PCIE_CLKEN R704 10K_0402_NC
GEVENT7- R705 10K_0402
LANWAKE- R706 10K_0402
PCIE_WAKE- R707 10K_0402
PCIE WAKE UP CONNECT TO 397 EVENT6
KBSMI- R708 10K_0402 +3VRUN
AZ_SDOUT R710 10K_0402
AZ_SYNC R711 10K_0402
AZ_RST- R712 10K_0402
CHI- R713 10K_0402_NC
GPM6- R716 10K_0402
AZ_SDIN1 R718 10K_0402
AZ_SDIN0 R719 10K_0402
BIT_CLK R720 10K_0402
SB_TEST0 R721 10K_0402
SB_TEST1 R723 10K_0402
MB_ID0 R965 10K_0402
MB_ID1 R966 10K_0402_NC
For SATA 06,09,06
FOR ALC888 06'09'14
For EMI Near R720
+3VRUN
RUN_SMBCLK R727 4.7K
RUN_SMBDATA R728 4.7K
ROM_CS- R729 4.7K_0402
MB_ID0 R732 4.7K_0402_NC
MB_ID1 R734 4.7K_0402
VGATE R693 4.7K_0402
05'10'21 ABLE
+3VRUN CI1030 0.1UF_0402_NC
C837 15PF_NPO_NC 14_X1
14M-20pf-SMD_NC Y6 R738 1M_NC
C842 15PF_NPO_NC 14_X2
25 PCIE_CLKEN
21,24,26 P_PME-
26 LANWAKE-
29 PM_SLP_S3-
29 PM_SLP_S5-
29 PM_PWRBTN-
6 SB_PWRGD
6 SUS_STAT-
29 GA20
29 KBRST-
3 THERMTRIPSB-
29 KBSMI-
25 PCIE_WAKE-
29 RSMRST-
13 SB_OSCIN
14 SB_BLON
27 SPKR
10,11,13,25,26 RUN_SMBCLK
10,11,13,25,26 RUN_SMBDATA
20 CBLIDB
25,27 BIT_CLK
CLK48_USB
24,25,27 AZ_SDOUT
25,27 AZ_SYNC
19 AC_SDOUT
27 AZ_SDIN0
25 AZ_SDIN1
19 SPDIF_OUT
TALERT#/TEMP_ALERT#/GPIO10
BLINK/GPM6#
PCI_PME#/GEVENT4#
RI#/EXTEVNT0#
SLP_S3#
SLP_S5#
PWR_BTN#
PWR_GOOD
SUS_STAT#
TEST1
TEST0
GA20IN
KBRST#
SMBALERT#/THRMTRIP#/GEVENT2#
LPC_PME#/GEVENT3#
LPC_SMI#/EXTEVNT1#
VOLT_ALERT#/S3_STATE/GEVENT5#
SYS_RESET#/GPM7#
WAKE#/GEVENT8#
RSMRST#
14M_X1/OSC
14M_X2
SIO_CLK
ROM_CS#/GPIO1
GHI#/GPIO6
VGATE/GPIO7
AGP_STP#/GPIO4
AGP_BUSY#/GPIO5
FANOUT0/GPIO3
SPKR/GPIO2
SCL0/GPOC0#
SDA0/GPOC1#
DDC1_SCL/GPIO9
DDC1_SDA/GPIO8
DDC2_SCL/GPIO11
DDC2_SDA/GPIO12
NC1
NC4
NC3
NC2
AC_BITCLK
AC_SDOUT
AC_SDIN0
AC_SDIN1
AC_SDIN2
AC_SYNC
AC_RST#
SPDIF_OUT
48M_X1/USBCLK
48M_X2
USB_RCOMP
USB_VREFOUT
USB_ATEST1
USB_ATEST0
USB_OC0#/GPM0#
USB_OC1#/GPM1#
USB_OC2#/FANOUT1/GPM2#
USB_OC3#/GPM3#
USB_OC4#/GPM4#
USB_OC5#/GPM5#
USB_OC6#/FAN_ALERT#/GEVENT6#
USB_OC7#/CASE_ALERT#/GEVENT7#
USB_HSDP7+
USB_HSDM7-
USB_HSDP6+
USB_HSDM6-
USB_HSDP5+
USB_HSDM5-
USB_HSDP4+
USB_HSDM4-
USB_HSDP3+
USB_HSDM3-
USB_HSDP2+
USB_HSDM2-
USB_HSDP1+
USB_HSDM1-
USB_HSDP0+
USB_HSDM0-
AVDDTX_0
AVDDTX_1
AVDDTX_2
AVDDTX_3
AVDDRX_0
AVDDRX_1
AVDDRX_2
AVDDRX_3
AVDDC
AVSSC
AVSS_USB_1
AVSS_USB_2
AVSS_USB_3
AVSS_USB_4
AVSS_USB_5
AVSS_USB_6
AVSS_USB_7
AVSS_USB_8
AVSS_USB_9
AVSS_USB_10
AVSS_USB_11
AVSS_USB_12
AVSS_USB_13
AVSS_USB_14
AVSS_USB_15
AVSS_USB_16
AVSS_USB_17
AVSS_USB_18
AVSS_USB_19
AVSS_USB_20
AVSS_USB_21
AVSS_USB_22
AVSS_USB_23
AVSS_USB_24
SB_48M_X1 R700 0R0402 CLK48_USB 13
SB_48M_X2
USB_RCOMP R814 11.8K_1%
TP149
TP150
TP151
GPM0
GPM1
GPM2
GPM3
GPM4
R709 33R AZ_RST- 24,25,27
KBSCI- 29
GEVENT7-
USBP6P 24
USBP6N 24
USBP3P 25
USBP3N 25
USBP2P 22
USBP2N 22
USBP1P 22
USBP1N 22
USBP0P 22
USBP0N 22
+3VUSB1
AVDDC
LOW LOW BATTERY -->A21
200mA rating
+3VSUS
L45 FB_28_0.9A_0805
+3VUSB1
C986 10UF/10V_0805
C839 1UF
C840 0.1UF_0402
C841 0.1UF_0402
C843 22UF_1206
C844 1UF
C845 0.1UF_0402
C846 0.1UF_0402
+3VSUS
AVDDC
L47 FB_28_0.9A_0805
C847 2.2UF
C848 10UF/10V_0805
MICRO-STAR INT'L CO.,LTD.
Title
SB450(ACPI&GPIO&USB)
Size Custom
Document Number MS-1412
Rev 1.1
Date: Wednesday, November 29, 2006
Sheet 15 of 41

EMI要求改爲33ohm

LENGTH OF (PCI_CLK9_R + PCI_CLK9_FB) SHOULD MATCH THE AVERAGE OF THE OTHER SPCI_CLKS

SB400 SB
Part 1 of 4

U202A

For RoHS change.
06'05'15

05'10'20 ABLE

06'05'25 Able

06'25'26 ABLE

Note: Overlap common pads where possible for dual-op resistors.

Title	SB450(PCI&CPU&RTC)
Size	Custom
Document Number	MS-1412
Rev	1.1
Date:	Wednesday, November 29, 2006
Sheet	16 of 41

MICRO-STAR INT'L CO.,LTD.

Place all the decoupling caps on this sheet close to SB.

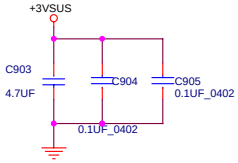

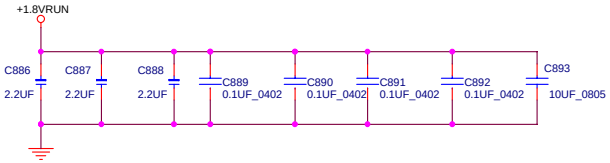

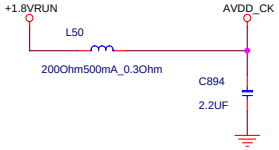

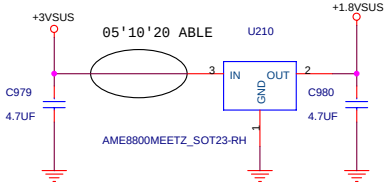

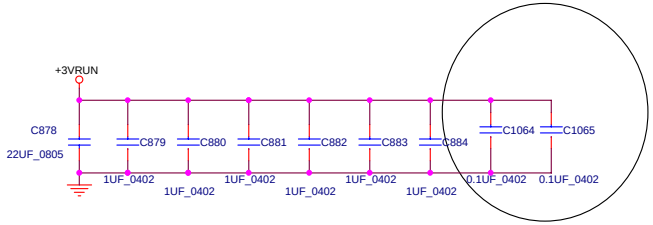

靠近SB
SATA PIN
06'09'18

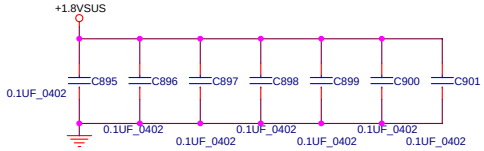

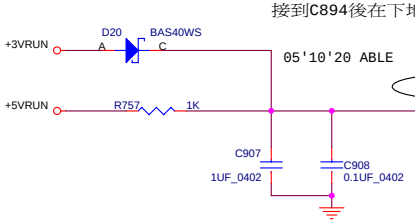

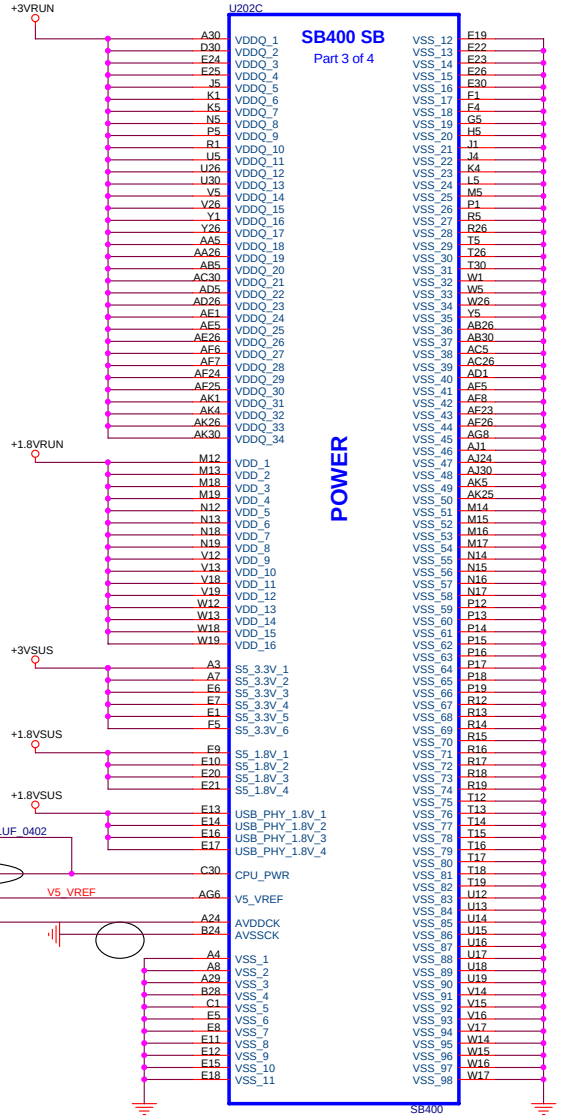

MSI CORPORATION

Title: **SB450(SATA/IDE)&POWER**

Size	Document Number	Rev
Custom	MS-1412	1.1

Date: Wednesday, November 29, 2006 Sheet 17 of 41

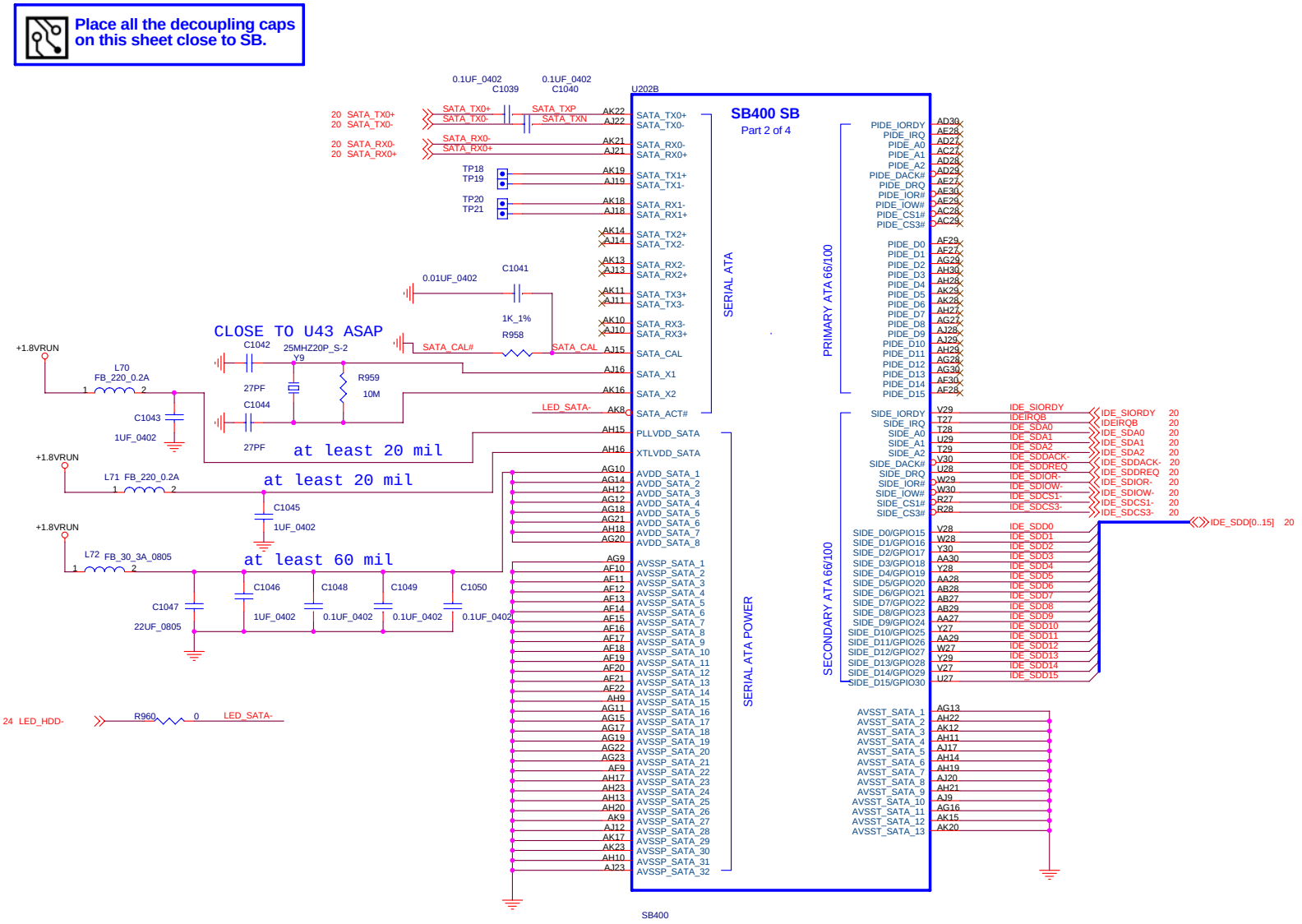

Title	MSI CORPORATION
	SB450(SATA)
Size	Custom
Document Number	MS-1412
Rev	1.1
Date:	Wednesday, November 29, 2006
Sheet	18 of 41

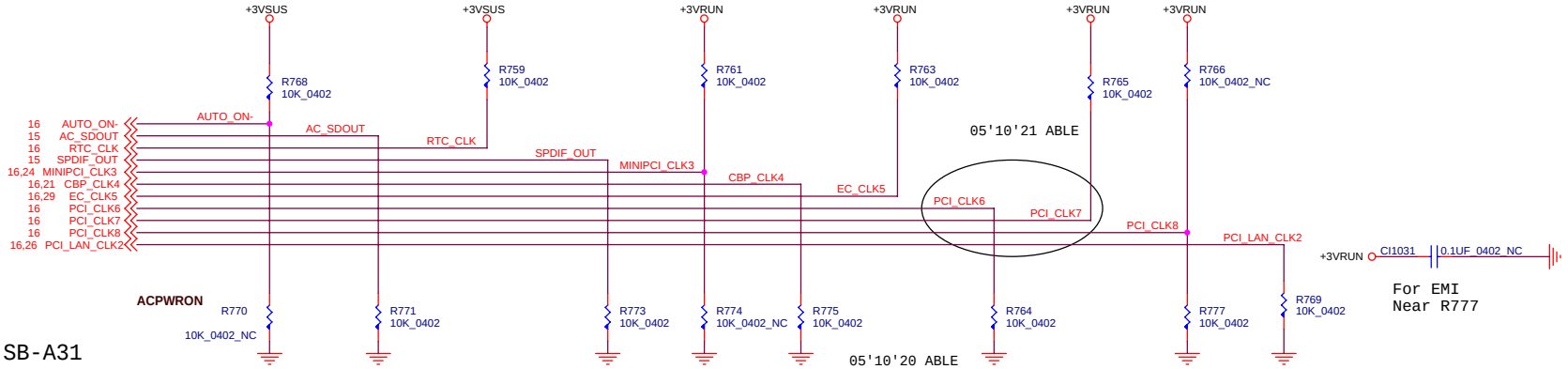

STRAP FOR SB-A31

	ACPWRON	AC_SDOUT	RTC_CLK	SPDIF_OUT	PCI_CLK2	PCI_CLK3	PCI_CLK4	PCI_CLK5	PCI_CLK6	PCI_CLK7 PCI_CLK8
PULL HIGH	MANUAL PWR ON DEFAULT	USE DEBUG STRAPS	INTERNAL RTC DEFAULT	SIO 24MHz	48MHz XTAL MODE	USB PHY POWERDOWN DISABLE DEFAULT	Use internal PLL48	14MHZ OSC MODE DEFAULT	CPU IF=K8	ROM TYPE: H, H = PCI ROM H, L = LPC TYPE I ROM DEFAULT L, H = LPC TYPE II ROM L, L = FWH ROM
PULL LOW	AUTO PWR ON	IGNORE DEBUG STRAPS DEFAULT	EXTERNAL RTC	SIO 48MHz DEFAULT	48MHz OSC MODE DEFAULT	USB PHY POWERDOWN ENABLE	Use external 48MHz clock DEFAULT	14MHZ XTAL MODE	CPU IF=P4 DEFAULT	

Note: Overlap common pads where possible for dual-op resistors.

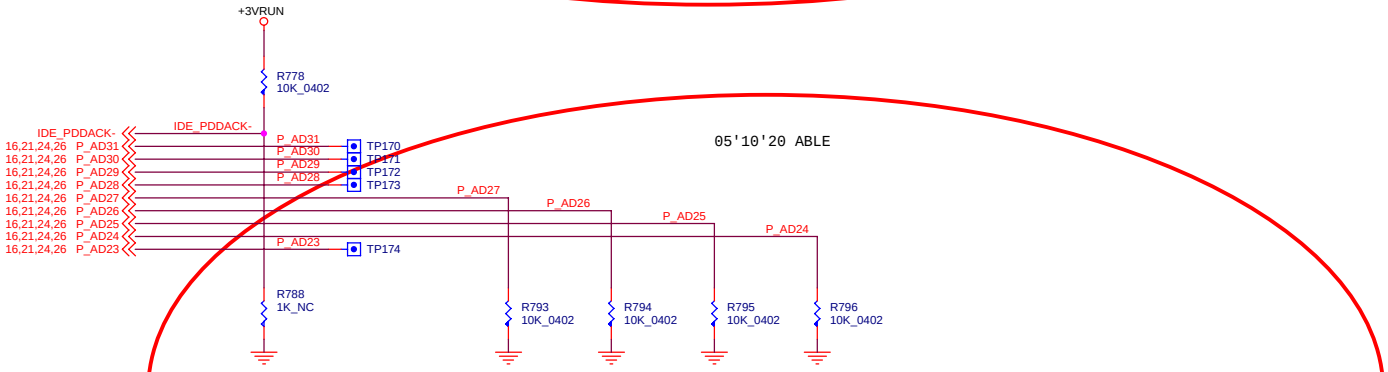

	PDACK#	PCI_AD31	PCI_AD30	PCI_AD29	PCI_AD28	PCI_AD27	PCI_AD26	PCI_AD25	PCI_AD24	PCI_AD23
PULL HIGH	USE LONG RESET DEFAULT	RESERVED DEFAULT	RESERVED DEFAULT	RESERVED DEFAULT	RESERVED DEFAULT	BYPASS internal PCI PLL	BYPASS ACPI BCLK	BYPASS IDE PLL	USE EEPROM PCIE STRAPS	USE USB PLL
PULL LOW	USE SHORT RESET					USE internal PCI PLL DEFAULT	USE ACPI BCLK DEFAULT	USE IDE PLL DEFAULT	USE DEFAULT PCIE STRAPS DEFAULT	BYPASS USB PLL

LONG RESET -->A21

MICRO-STAR INT'L CO.,LTD.

Title: SB450(HW STRAP)

Size: Custom | Document Number: MS-1412 | Rev: 1.1

Date: Wednesday, November 29, 2006 | Sheet 19 of 41

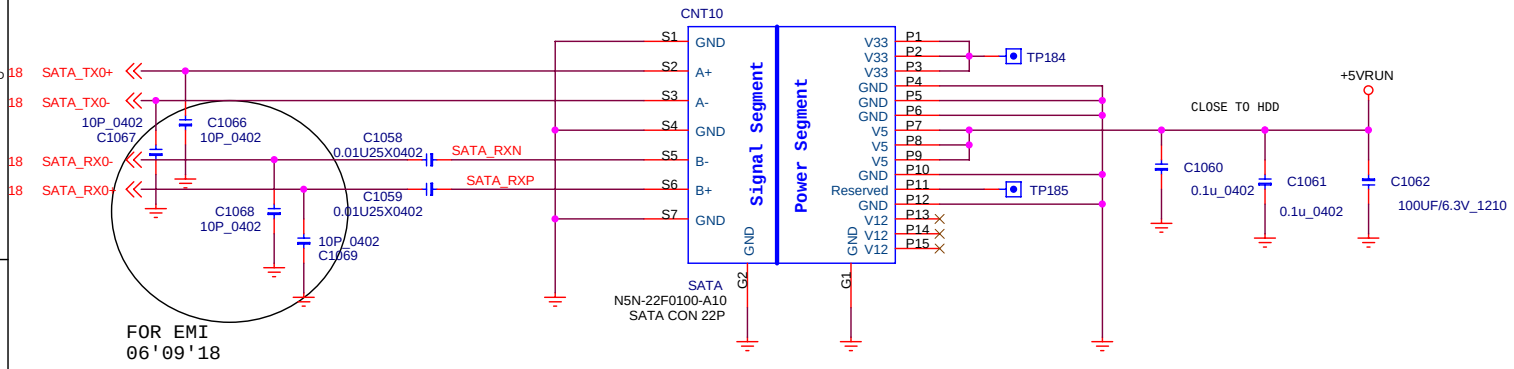

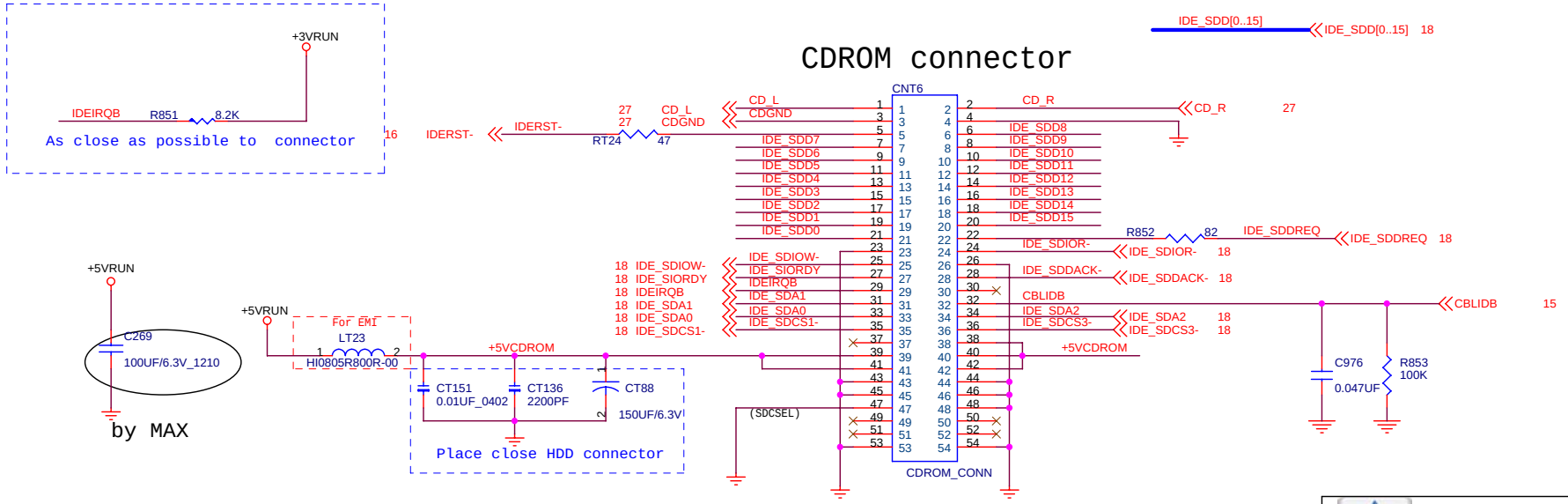

PIN32:PDIAG
PIN37:PASP
PIN47:CABLE SELECT->Low:Master
NC or High:Slave

MICRO-STAR INT'L CO.,LTD.

Title: **HDD & CDROM CONN**

Size	Document Number	Rev
Custom	MS-1412	1.1

Date: Wednesday, November 29, 2006 Sheet 20 of 41

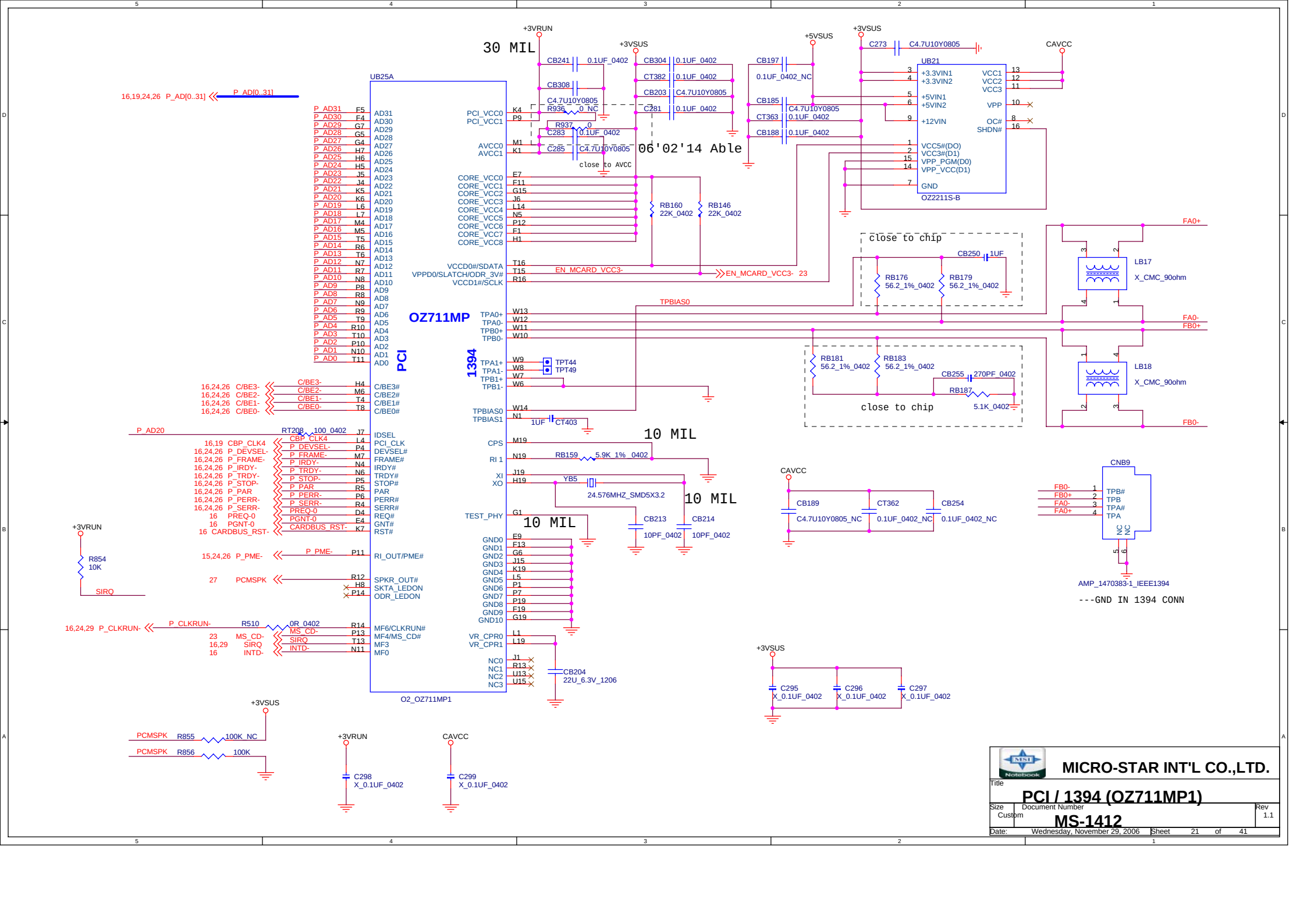

Title	PCI / 1394 (OZ711MP1)
Size	Custom
Document Number	MS-1412
Rev	1.1
Date:	Wednesday, November 29, 2006
Sheet	21 of 41

MICRO-STAR INT'L CO.,LTD.

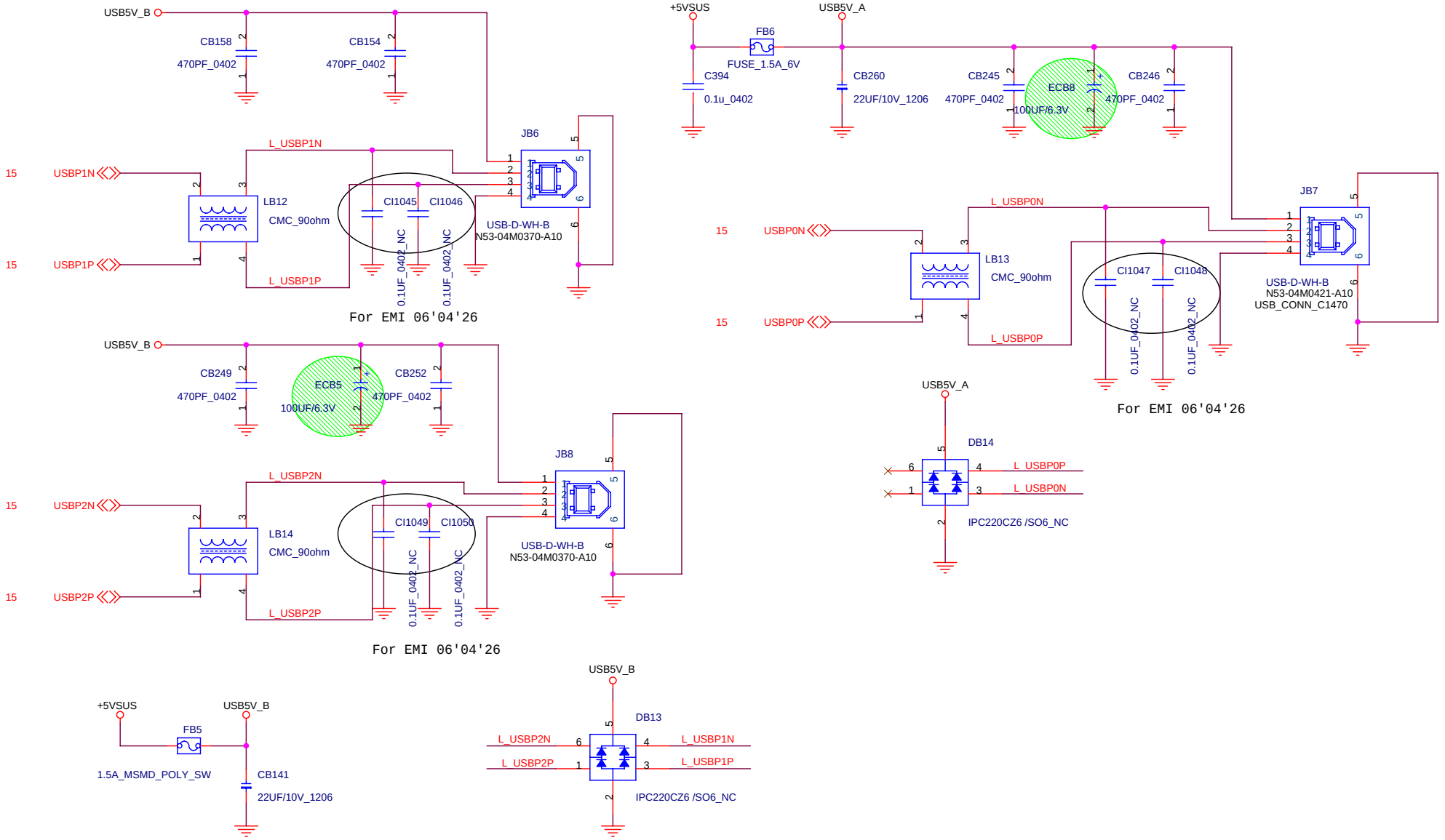

MICRO-STAR INT'L CO.,LTD.

Title

USB2.0 CON X3

Size	Document Number	Rev
Custom	MS-1412	1.1

Date: Wednesday, November 29, 2006 Sheet 22 of 41

PCMCIA SLOT

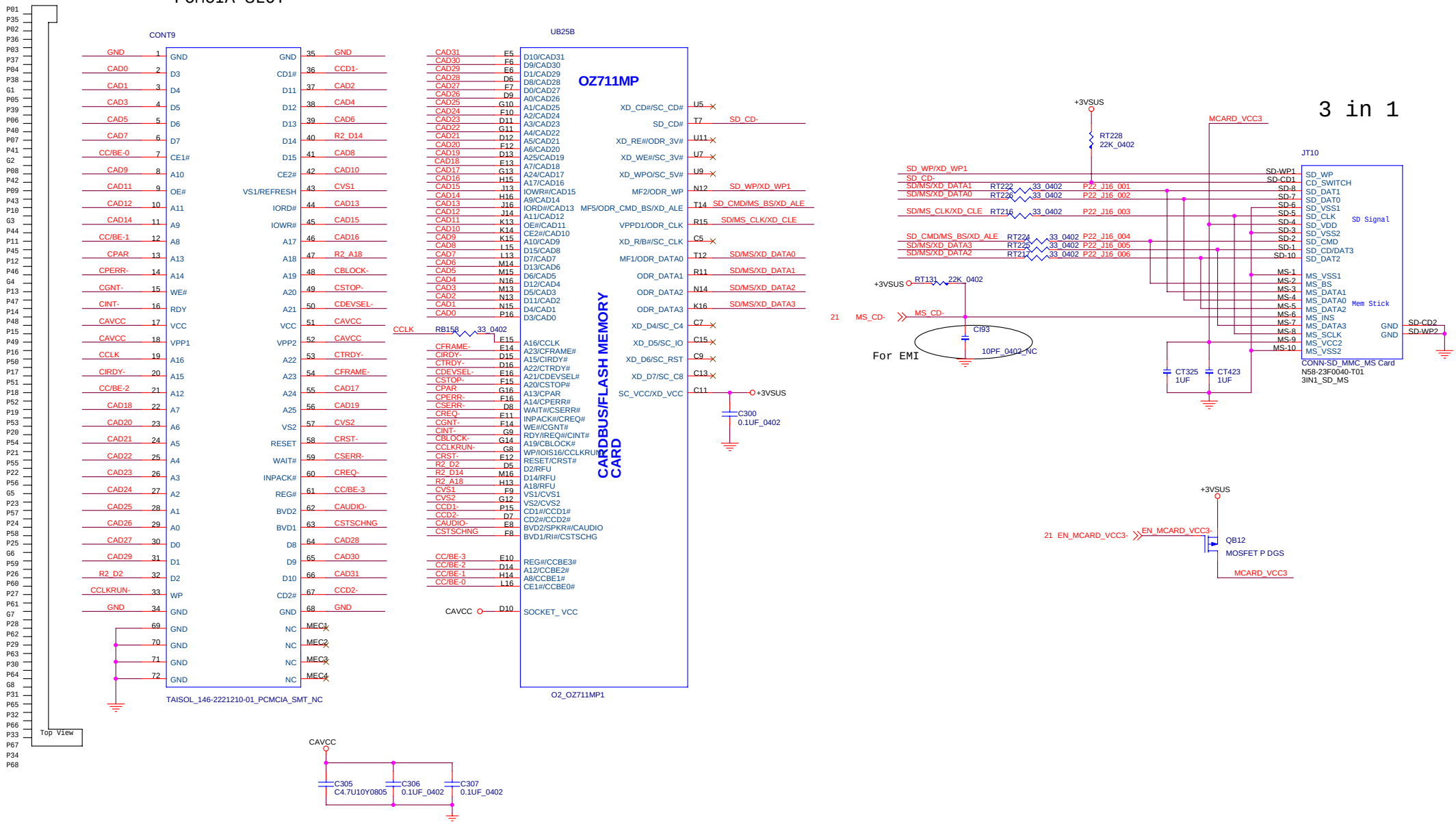

Title	CARDBUS/FLASH CARD
Size	Custom
Document Number	MS-1412
Rev	1.1
Date:	Wednesday, November 29, 2006
Sheet	23 of 41

MICRO-STAR INT'L CO.,LTD.

MINI PCI SOCKET

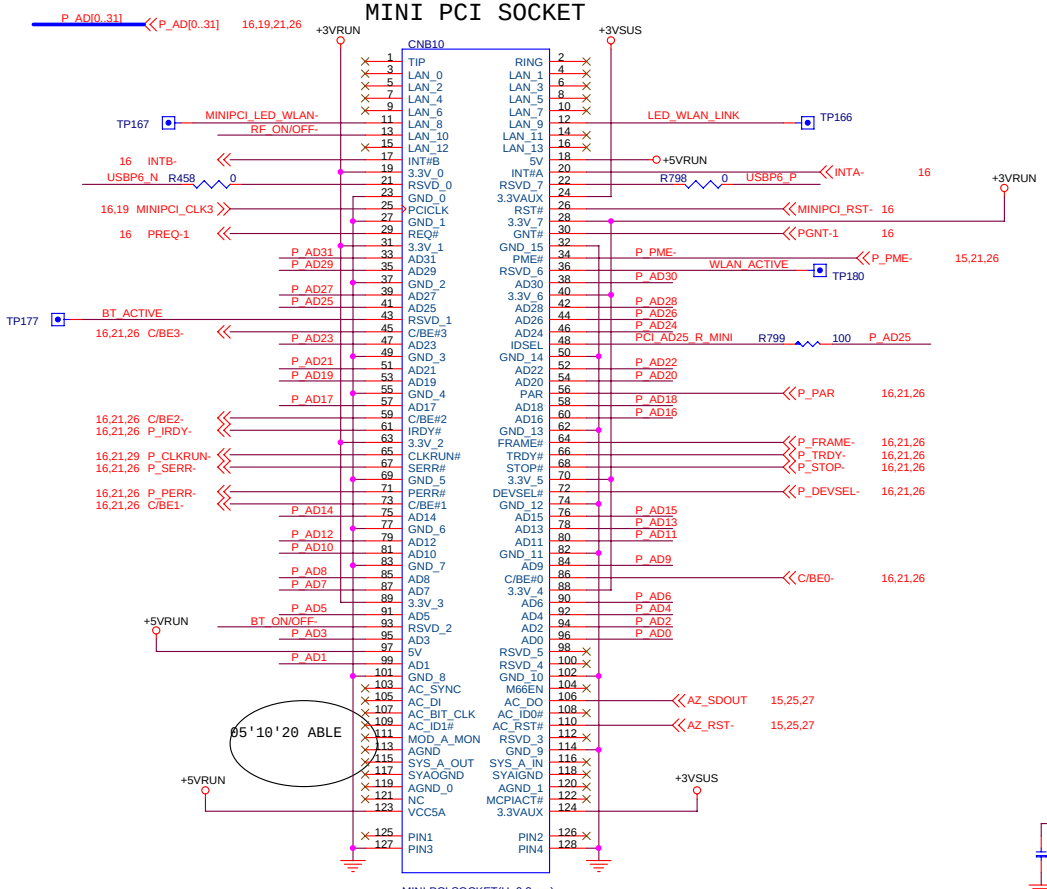

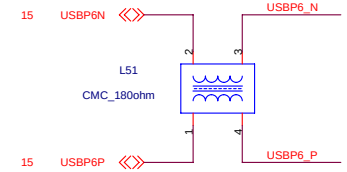

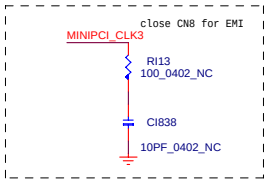

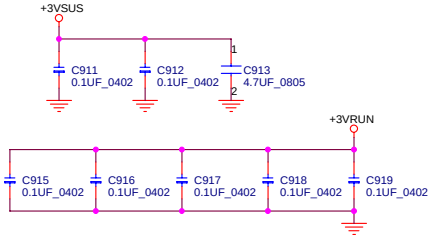

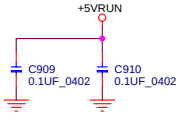

WLAN_ON/OFF Control

OPEN RF ON (HiZ)
LOW RF OFF

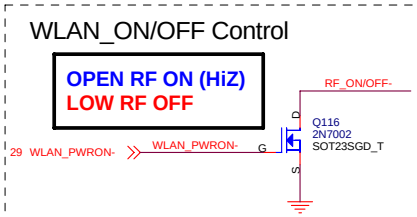

BlueTooth_ON/OFF Control

OPEN RF ON (HiZ)
LOW RF OFF

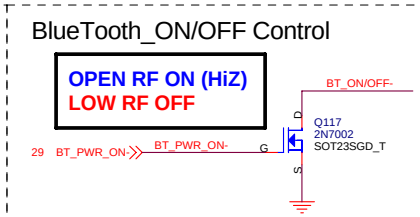

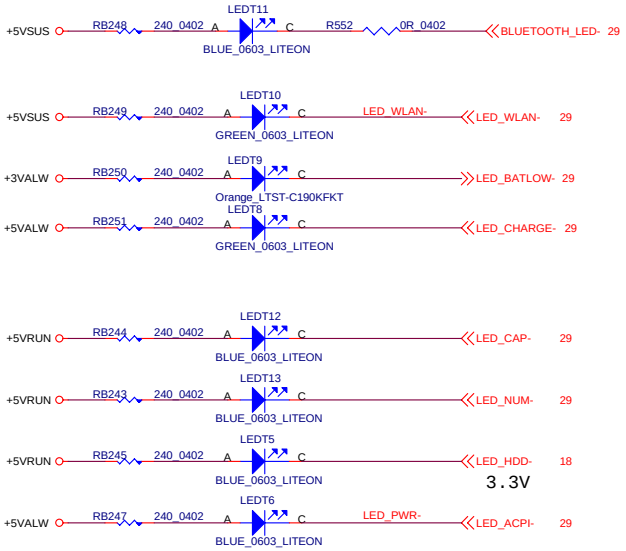

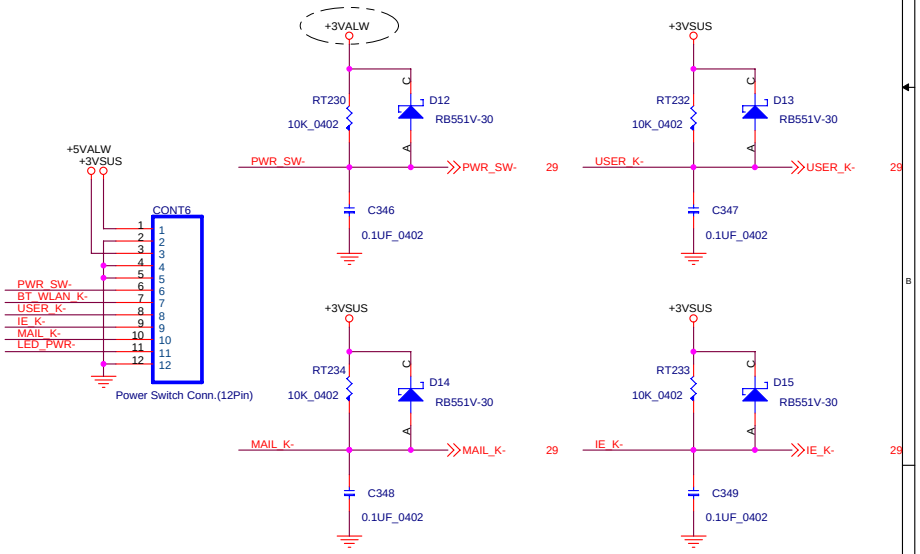

MICRO-STAR INT'L CO.,LTD.

Title: MINI_PCI & LED & SW

Size: Custom | Document Number: MS-1412 | Rev: 1.1

Date: Wednesday, November 29, 2006 | Sheet 24 of 41

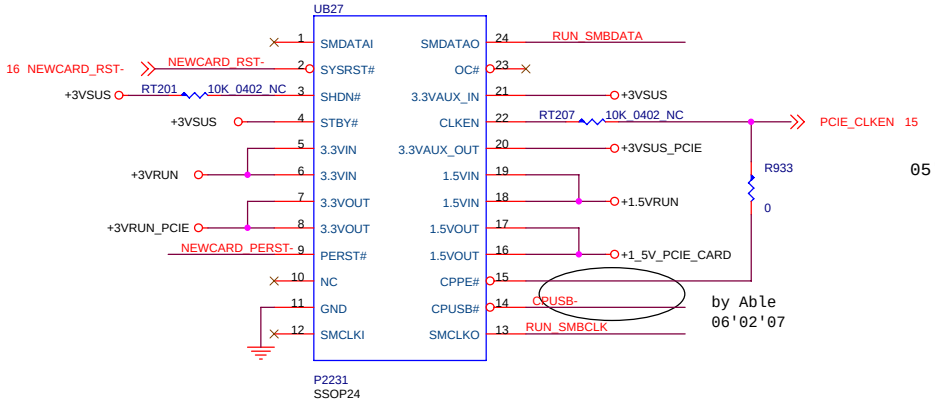

by Able
06'02'07

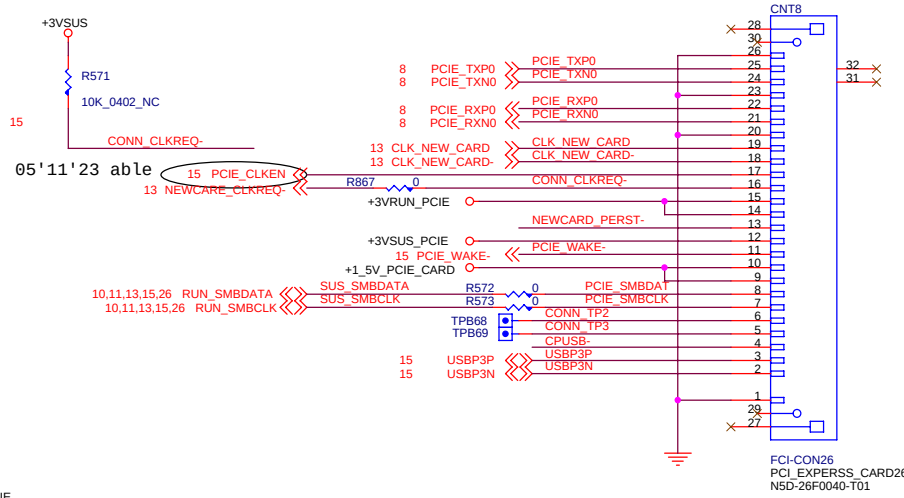

05'11'23 able

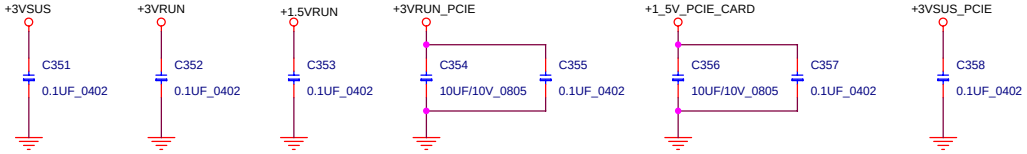

New Card

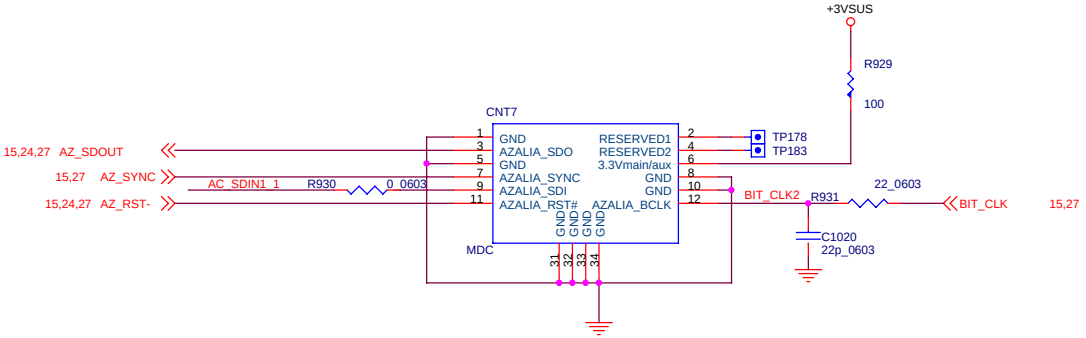

MDC Ver1.5

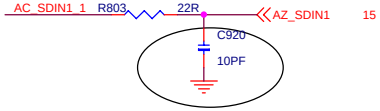

EMI request 05'12'30

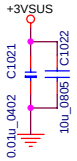

MICRO-STAR INT'L CO.,LTD.

Title: NEW CARD & MDC CONN

Size: Custom | Document Number: MS-1412 | Rev: 1.1

Date: Wednesday, November 29, 2006 | Sheet 25 of 41

Part Value Selection:
GbE: 8110S LAN(1000M)
TE: 8100C LAN(10/100M)
L: With LAN option
X: No Stuff

	DVDD	DVDDA	AVDDL	AVDDH	V-12P
8100C	2.5V	2.5V	3.3V	X	2.5V
8110S	1.8V	1.8V	2.5V	3.3V	X
8110SB	1.2V	1.2V	2.5V	3.3V	3.3V

RTL8100C 10/100M	USED: Q125,R903,L66,C991
	REMOVE: Q124,Q126,L67,C1009,C1010,R926
RTL8110S 1G	USED: Q124,Q126,L67,C1009,C1010
	REMOVE: Q125,R903,R926,L66,C991

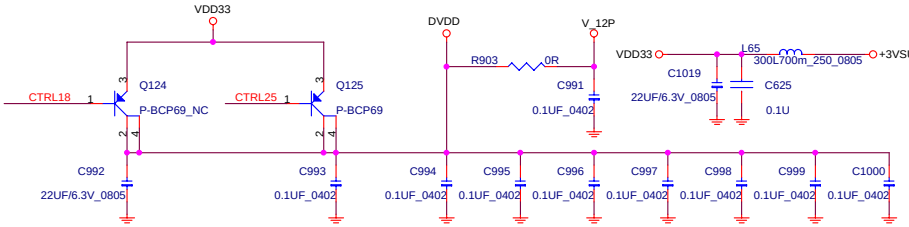

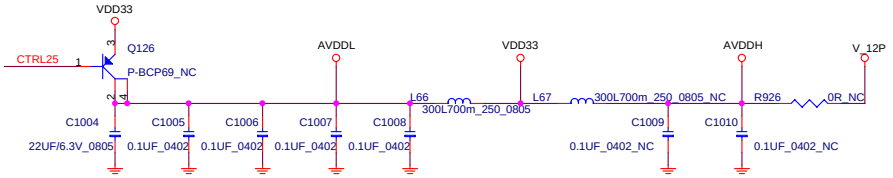

Place at pin 10,120

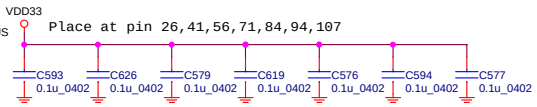

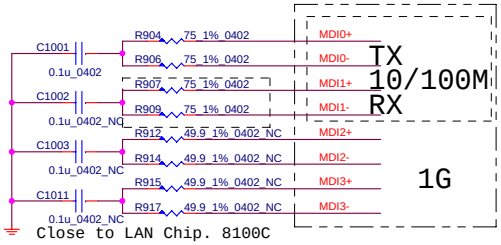

Close to LAN Chip. 8100C use 0.1u; 8110SX use 0.01u

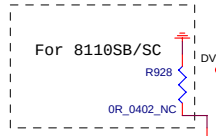

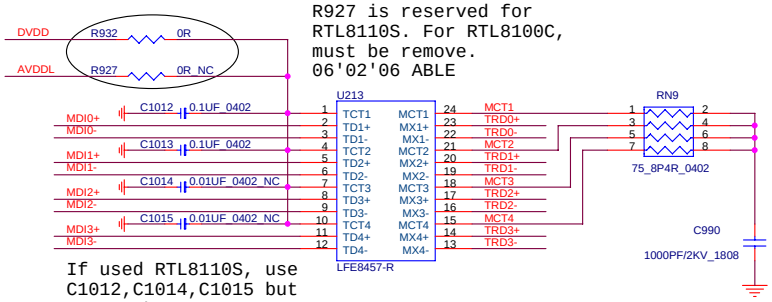

R927 is reserved for RTL8110S. For RTL8100C, must be remove.
06'02'06 ABLE

If used RTL8110S, use C1012,C1014,C1015 but C1013 change to 0.01UF.

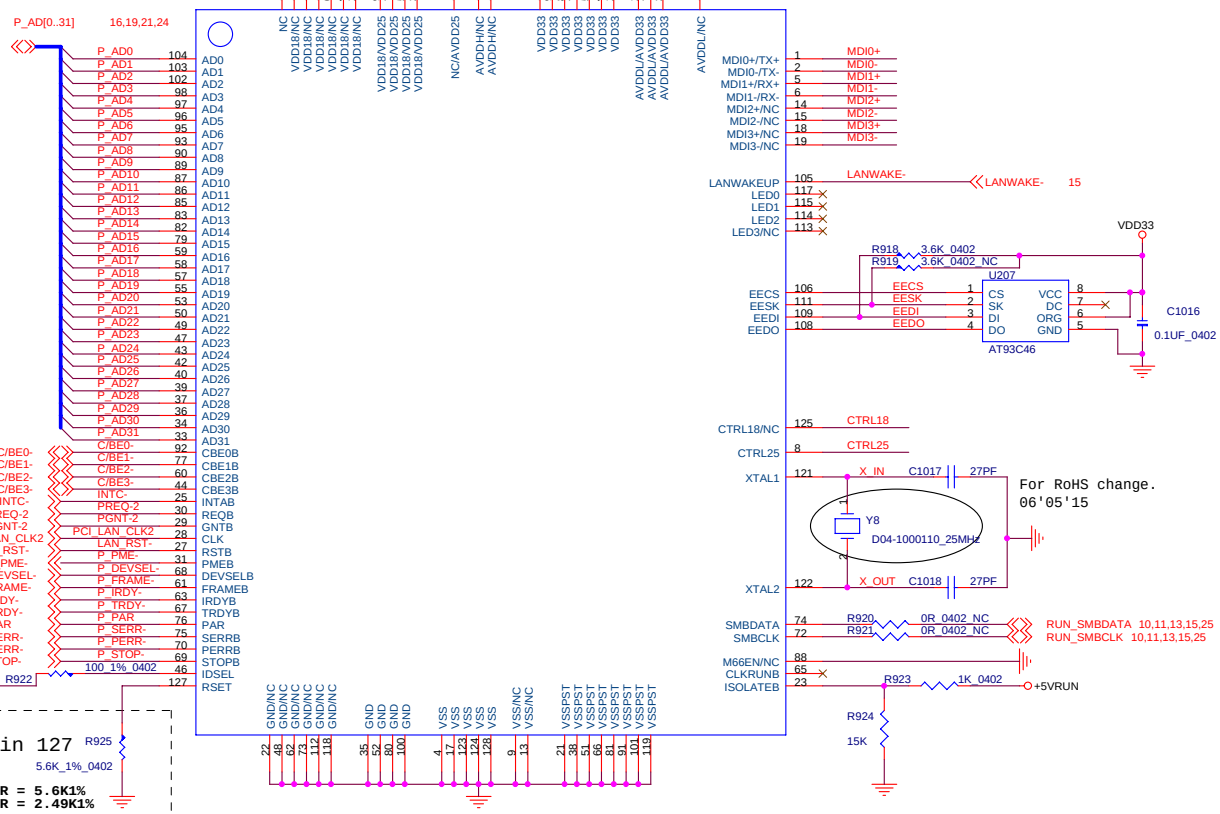

For RoHS change. 06'05'15

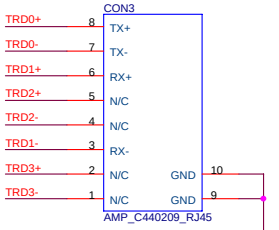

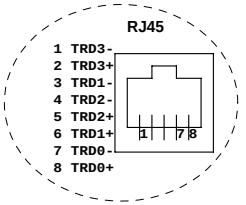

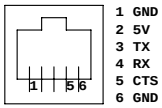

RTL 8100C
B06-8100C04-R09

LAN = INTC-
IDSEL = P_AD19
MASTER = PREQ-2

MICRO-STAR INT'L CO.,LTD.

Title: PCI_LAN (RTL8100C)

Size: Custom | Document Number: MS-1412 | Rev: 1.1

Date: Wednesday, November 29, 2006 | Sheet 26 of 41

	High (turn on)	Low (Mute)
DEPOP_MUTE#	Normal keep High	Power On/Down & S3
GPIO1	Normal keep High	Line-out Jack IN

Close to ALC880

REALTEK

ALC883

ALC883-LF-A2-RH

06'02'06
Able

FOR VISTA

FOR EMI

For EMI

For EMI solution

POWER ISOLATION (ANALOG 5V)

POWER ISOLATION (CODEC 3V)

10/7

AMP GAIN
CHAANGE TO
10db
14,11,06

Av	GAIN0	GAIN1	SE/BTL#
6dB	0	0	0
10dB	0	1	0
15.6dB	1	0	0
21.6dB	1	1	0
4.3dB	X	X	1

MICRO-STAR INT'L CO.,LTD.

Title: AZALIA CODEC(ALC883)

Size: Custom | Document Number: MS-1412 | Rev: 1.1

Date: Wednesday, November 29, 2006 | Sheet 27 of 41

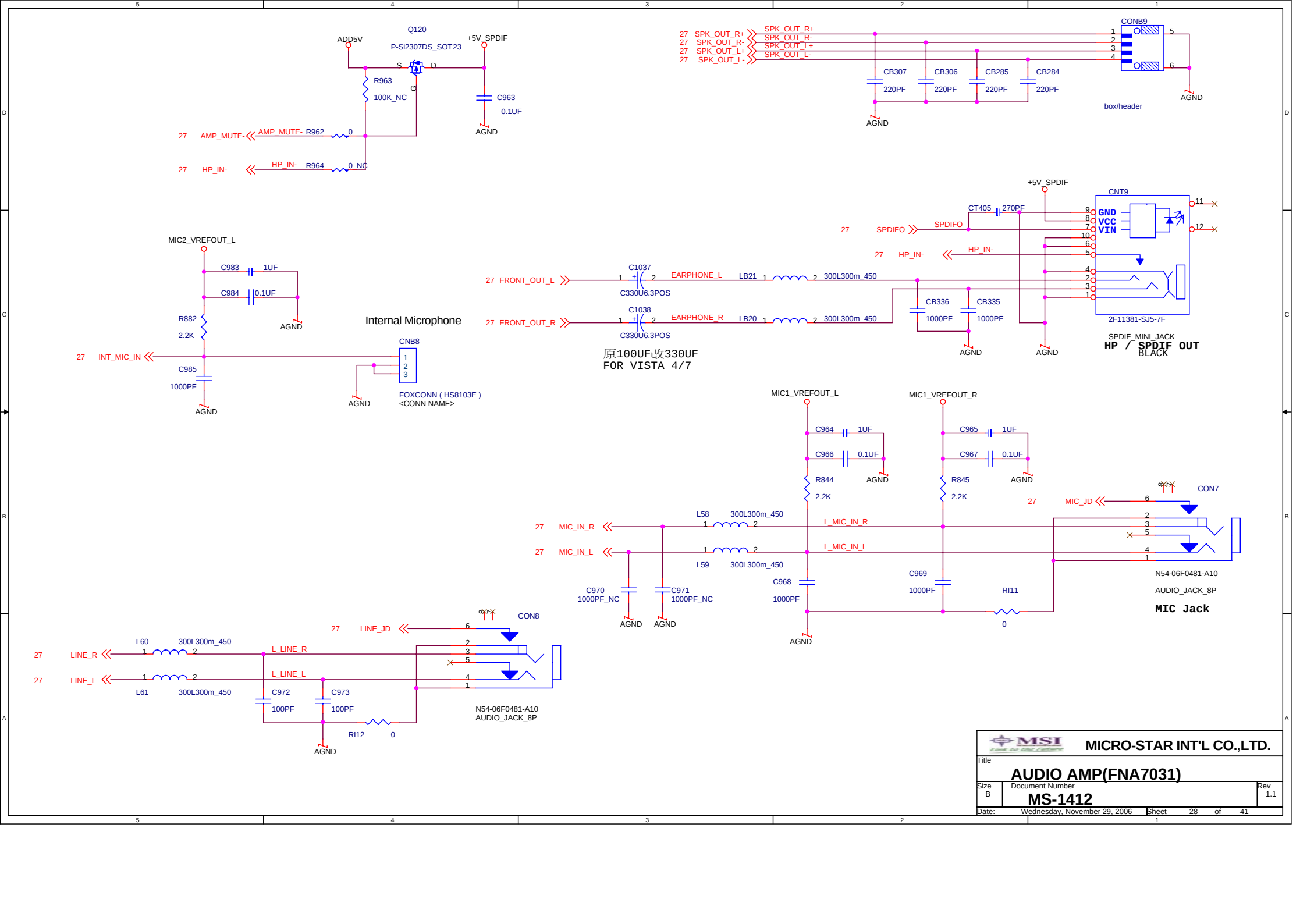
Q120
P-Si2307DS_SOT23
ADD5V
+5V_SPDIF
R963
100K_NC
C963
0.1UF
AGND
27 AMP_MUTE-
AMP_MUTE- R962 0
27 HP_IN-
HP_IN- R964 0_NC
27 SPK_OUT_R+
27 SPK_OUT_R-
27 SPK_OUT_L+
27 SPK_OUT_L-
CB307 220PF
CB306 220PF
CB285 220PF
CB284 220PF
CONB9
box/header
MIC2_VREFOUT_L
C983 1UF
C984 0.1UF
R882 2.2K
27 INT_MIC_IN
C985 1000PF
Internal Microphone
CNB8
FOXCONN (HS8103E)
<CONN NAME>
27 FRONT_OUT_L
27 FRONT_OUT_R
C1037
C1038
C330U6.3POS
EARPHONE_L
EARPHONE_R
LB21 300L300m_450
LB20 300L300m_450
CB336 1000PF
CB335 1000PF
原100UF改330UF
FOR VISTA 4/7
+5V_SPDIF
CT405 270PF
27 SPDIFO
SPDIFO
27 HP_IN-
HP_IN-
CNT9
GND
VCC
VIN
2F11381-SJ5-7F
SPDIF_MINI_JACK
HP / SPDIF OUT
BLACK
MIC1_VREFOUT_L
MIC1_VREFOUT_R
C964 1UF
C966 0.1UF
C965 1UF
C967 0.1UF
R844 2.2K
R845 2.2K
27 MIC_IN_R
27 MIC_IN_L
L58 300L300m_450
L59 300L300m_450
L_MIC_IN_R
L_MIC_IN_L
C970 1000PF_NC
C971 1000PF_NC
C968 1000PF
C969 1000PF
RI11 0
27 MIC_JD
CON7
N54-06F0481-A10
AUDIO_JACK_8P
MIC Jack
27 LINE_JD
27 LINE_R
27 LINE_L
L60 300L300m_450
L61 300L300m_450
L_LINE_R
L_LINE_L
C972 100PF
C973 100PF
RI12 0
CON8
N54-06F0481-A10
AUDIO_JACK_8P
MICRO-STAR INT'L CO.,LTD.
Title
AUDIO AMP(FNA7031)
Size B
Document Number
MS-1412
Rev 1.1
Date: Wednesday, November 29, 2006
Sheet 28 of 41

need check with KB pin define

EMI request 05'12'30

UB17

POWER & GND

LPC

KBC

X-BUS

SM-BUS

PS2 I/F

CLOCKS

ENE3910_LQFP176

Close to Pin19

W39L040P-70Z

BATT'S

H/W Strap for ENE 3910

USB/LAN_CONN_NC
N32-1140020-M06
53398_14

FLASH_8M_NC

FPC_6P_54550
T/P CONN

For EMI

For RoHS change.
06'05'15

電池改1P3S
06'02'07 by Able

Title	KBC/EC/uP (ENE3910-LFQP176)
Size	Custom
Document Number	MS-1412
Rev	1.1
Date:	Wednesday, November 29, 2006
Sheet	29 of 41

MICRO-STAR INT'L CO.,LTD.

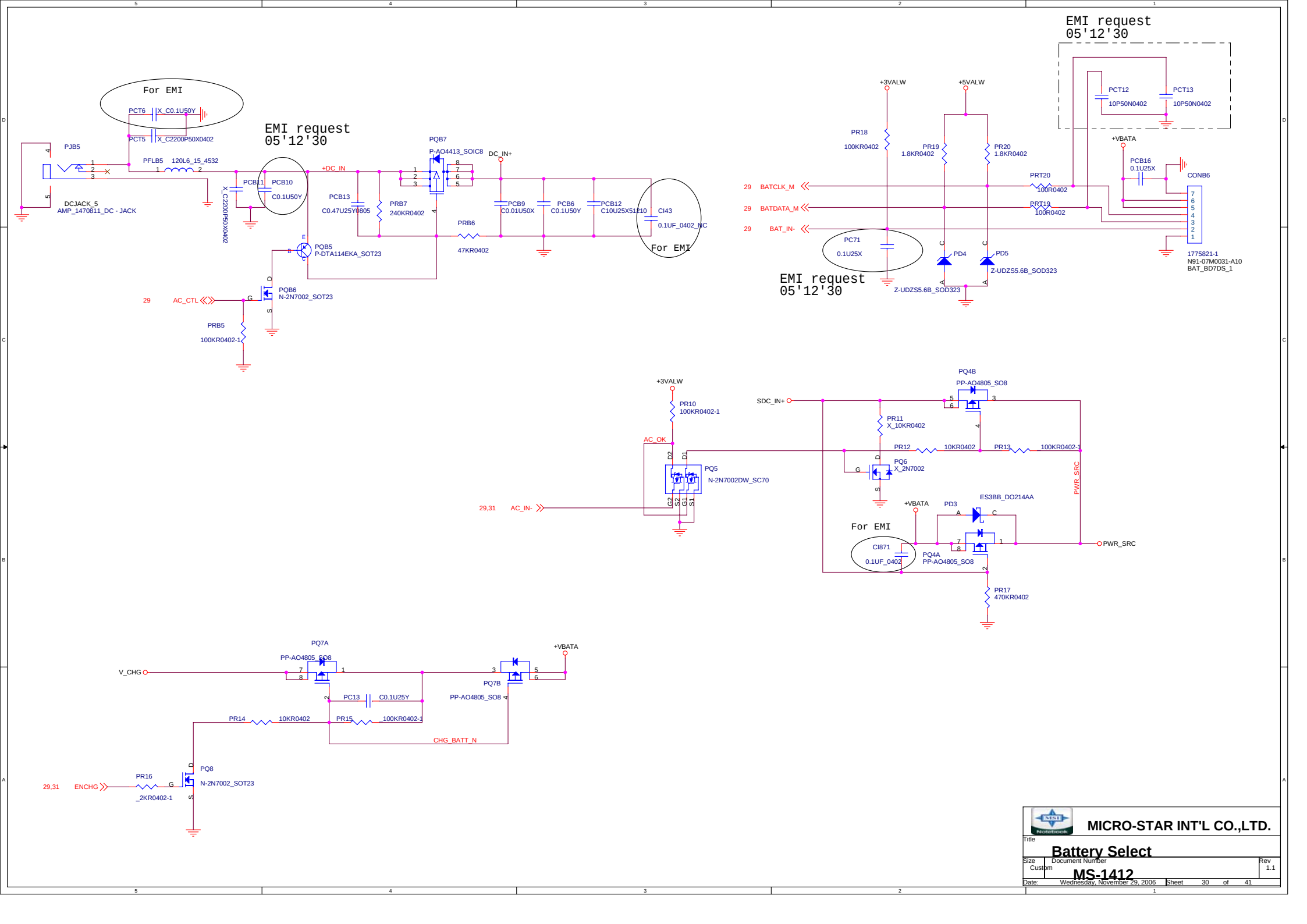
For EMI
PCT6
X_C0.1U50Y
PCT5
X_C2200P50X0402
EMI request
05'12'30
PJB5
PFLB5
120L6_15_4532
DCJACK_5
AMP_1470811_DC - JACK
PCB11
PCB10
C0.1U50Y
X_C2200P50X0402
+DC_IN
PQB7
P-AO4413_SOIC8
DC_IN+
PCB13
C0.47U25Y0805
PRB7
240KR0402
PCB9
C0.01U50X
PCB6
C0.1U50Y
PCB12
C10U25X51210
CI43
0.1UF_0402_NC
For EMI
PRB6
47KR0402
PQB5
P-DTA114EKA_SOT23
29
AC_CTL
PQB6
N-2N7002_SOT23
PRB5
100KR0402-1
EMI request
05'12'30
+3VALW
+5VALW
PR18
100KR0402
PR19
1.8KR0402
PR20
1.8KR0402
PCT12
10P50N0402
PCT13
10P50N0402
+VBATA
PCB16
0.1U25X
CONB6
PRT20
100R0402
PRT19
100R0402
29
BATCLK_M
29
BATDATA_M
29
BAT_IN-
PC71
0.1U25X
PD4
PD5
Z-UDZS5.6B_SOD323
Z-UDZS5.6B_SOD323
1775821-1
N91-07M0031-A10
BAT_BD7DS_1
+3VALW
PR10
100KR0402-1
AC_OK
PQ5
N-2N7002DW_SC70
29,31
AC_IN-
PQ4B
PP-AO4805_SO8
SDC_IN+
PR11
X_10KR0402
PR12
10KR0402
PR13
_100KR0402-1
PQ6
X_2N7002
PWR_SRC
+VBATA
PD3
ES3BB_DO214AA
For EMI
CI871
0.1UF_0402
PQ4A
PP-AO4805_SO8
PWR_SRC
PR17
470KR0402
PQ7A
PP-AO4805_SO8
V_CHG
PQ7B
PP-AO4805_SO8
+VBATA
PC13
C0.1U25Y
PR14
10KR0402
PR15
_100KR0402-1
CHG_BATT_N
PR16
_2KR0402-1
PQ8
N-2N7002_SOT23
29,31
ENCHG
MICRO-STAR INT'L CO.,LTD.
Title
Battery Select
Size
Custom
Document Number
MS-1412
Rev
1.1
Date:
Wednesday, November 29, 2006
Sheet
30
of
41

Adapter= 65 W
Adapter input voltage set 18.05 Voltage

3S2P: Charge current set 3 Amp
3S3P: Charge current set 4.5 Amp
Pre-charger: Charge current set 200mA

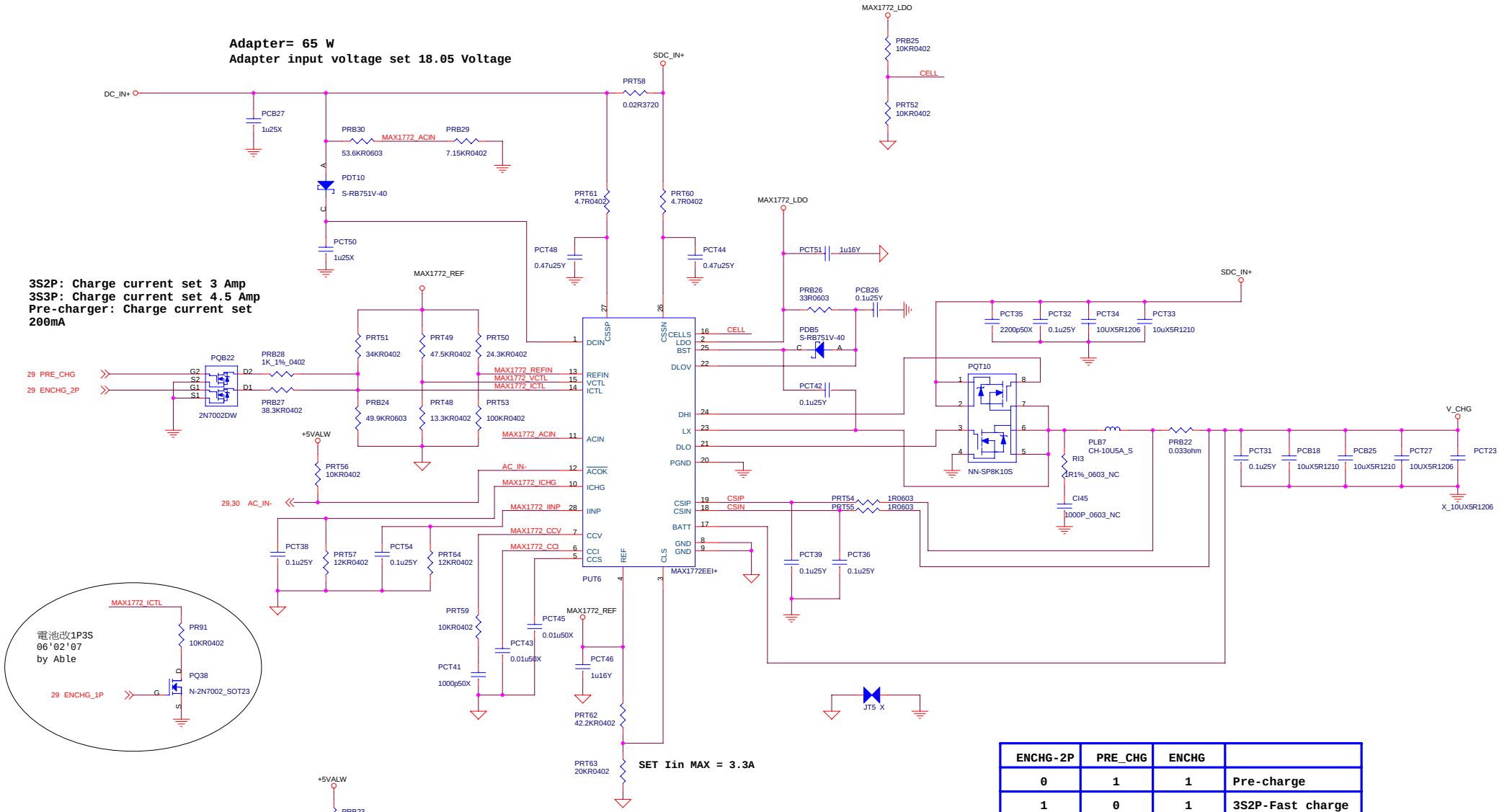

SET Iin MAX = 3.3A

ENCHG-2P	PRE_CHG	ENCHG	
0	1	1	Pre-charge
1	0	1	3S2P-Fast charge
0	0	1	3S3P-Fast charge
0	0	0	STOP CHARGE

MICRO-STAR INT'L CO.,LTD.

Title: **Battery Charger**

Size: Custom | Document Number: **MS-1412** | Rev: 1.1

Date: Wednesday, November 29, 2006 | Sheet 31 of 41

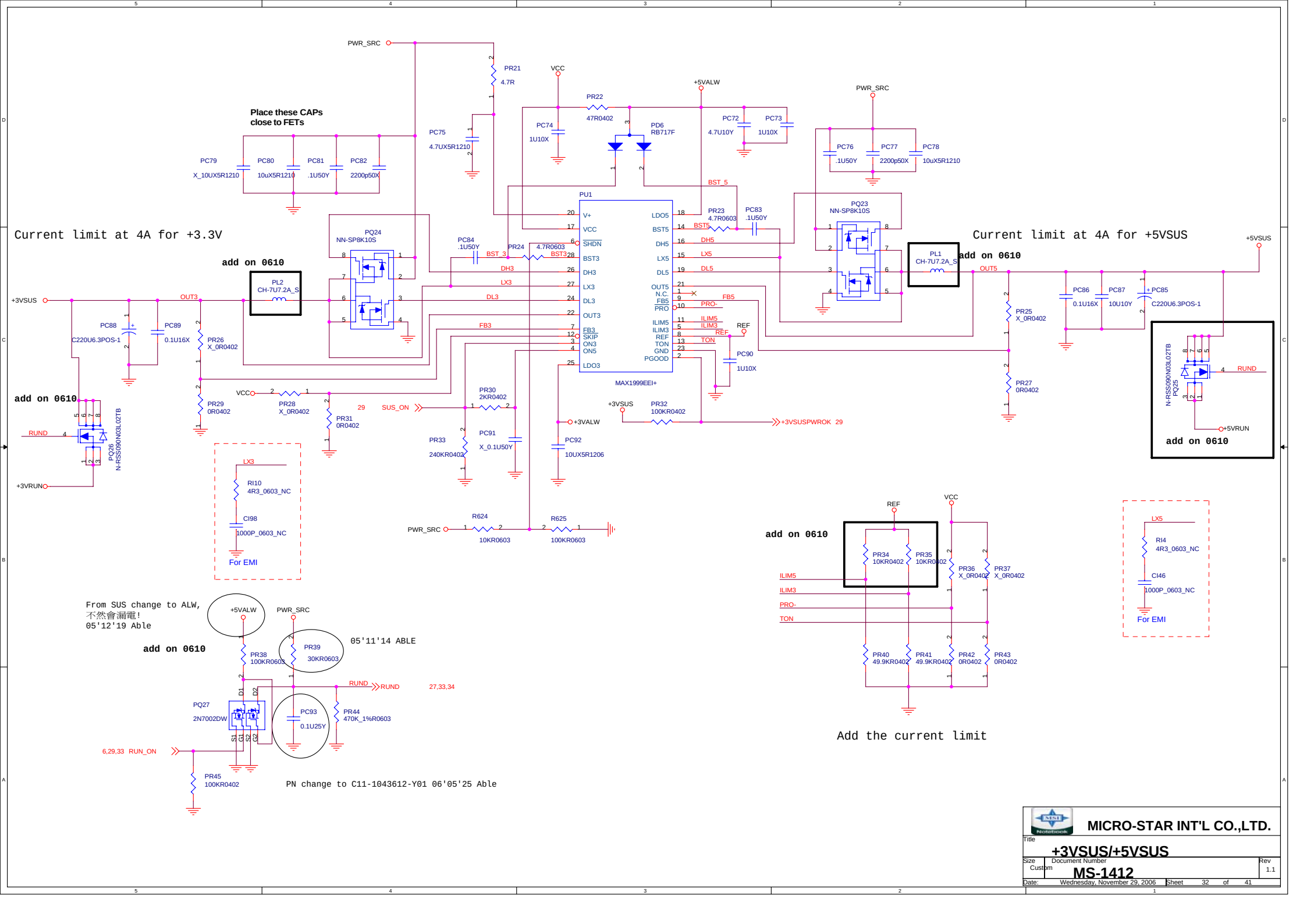
Current limit at 4A for +3.3V
Current limit at 4A for +5VSUS
Place these CAPs close to FETs
add on 0610
PU1
MAX1999EEI+
PQ24 NN-SP8K10S
PQ23 NN-SP8K10S
PQ26 N-RSS090N03L02TB
PQ25 N-RSS090N03L02TB
PQ27 2N7002DW
PL1 CH-7U7.2A_S
PL2 CH-7U7.2A_S
PWR_SRC
+5VALW
+3VSUS
+5VSUS
+3VRUN
+5VRUN
VCC
REF
PR21 4.7R
PR22 47R0402
PC74 1U10X
PD6 RB717F
PC72 4.7U10Y
PC73 1U10X
PC75 4.7UX5R1210
PC76 .1U50Y
PC77 2200p50X
PC78 10uX5R1210
PC79 X_10UX5R1210
PC80 10uX5R1210
PC81 .1U50Y
PC82 2200p50X
PC84 .1U50Y
PR24 4.7R0603
PR23 4.7R0603
PC83 .1U50Y
PC88 C220U6.3POS-1
PC89 0.1U16X
PR26 X_0R0402
PR29 0R0402
PR28 X_0R0402
PR31 0R0402
PR30 2KR0402
PR33 240KR0402
PC91 X_0.1U50Y
PC92 10UX5R1206
PC90 1U10X
PR32 100KR0402
PR25 X_0R0402
PR27 0R0402
PC86 0.1U16X
PC87 10U10Y
PC85 C220U6.3POS-1
BST_5
BST_3
DH3
LX3
DL3
FB3
DH5
LX5
DL5
FB5
PRO-
ILIM5
ILIM3
TON
SUS_ON
+3VSUSPWROK
RUND
LDO5
LDO3
SKIP
ON3
ON5
PGOOD
OUT3
OUT5
R624 10KR0603
R625 100KR0603
LX3
RI10 4R3_0603_NC
CI98 1000P_0603_NC
For EMI
LX5
RI4 4R3_0603_NC
CI46 1000P_0603_NC
For EMI
PR34 10KR0402
PR35 10KR0402
PR36 X_0R0402
PR37 X_0R0402
PR40 49.9KR0402
PR41 49.9KR0402
PR42 0R0402
PR43 0R0402
Add the current limit
From SUS change to ALW,
不然會漏電!
05'12'19 Able
PR38 100KR0603
PR39 30KR0603
05'11'14 ABLE
PR44 470K_1%R0603
PC93 0.1U25Y
PR45 100KR0402
6,29,33 RUN_ON
27,33,34
PN change to C11-1043612-Y01 06'05'25 Able
MICRO-STAR INT'L CO.,LTD.
+3VSUS/+5VSUS
MS-1412
Custom
Rev 1.1
Wednesday, November 29, 2006
Sheet 32 of 41

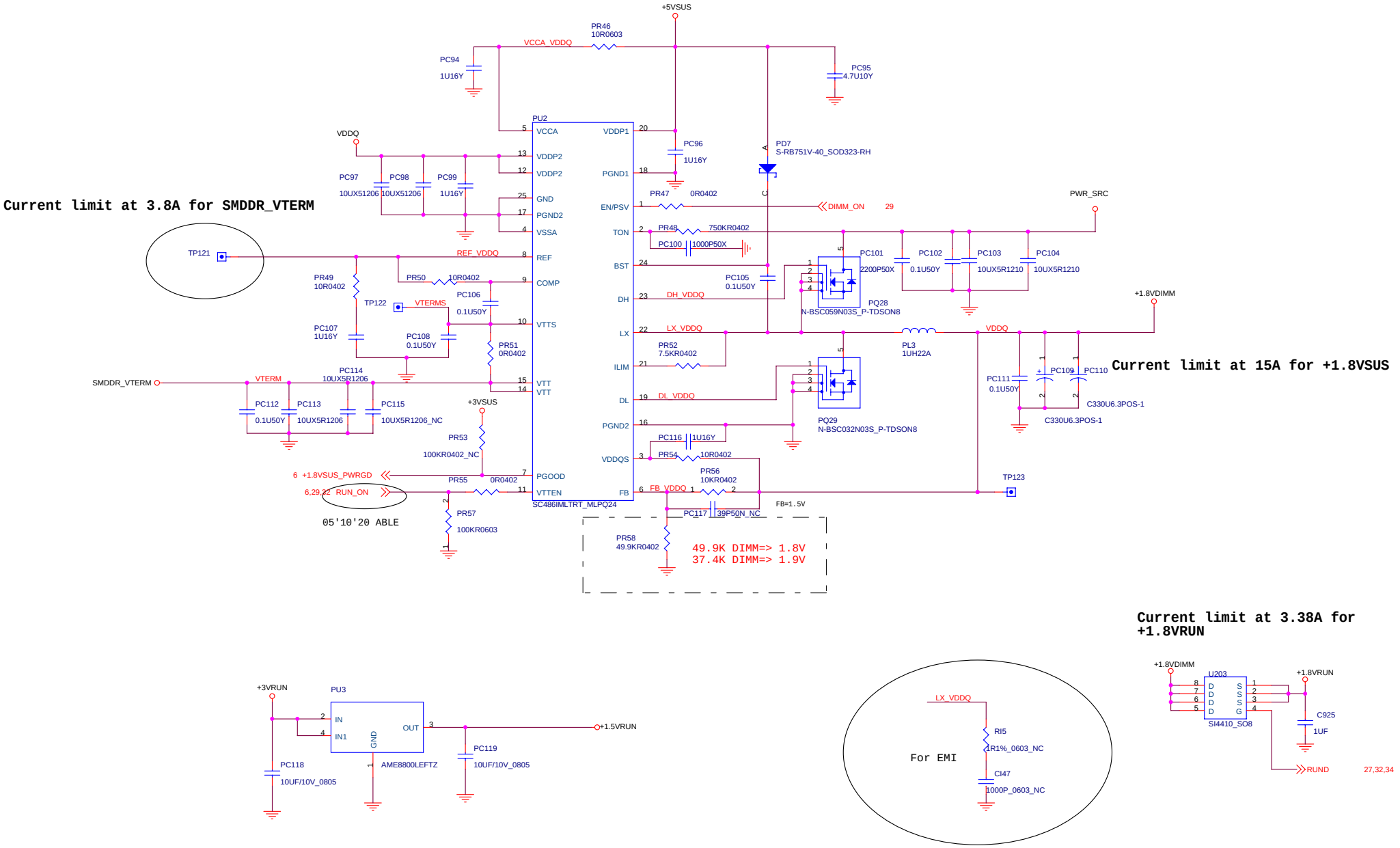

Title	M_VDDR & +1.8VDIMM	
Size: Custom	Document Number: MS-1412	Rev: 1.1
Date: Wednesday, November 29, 2006	Sheet 33 of 41	

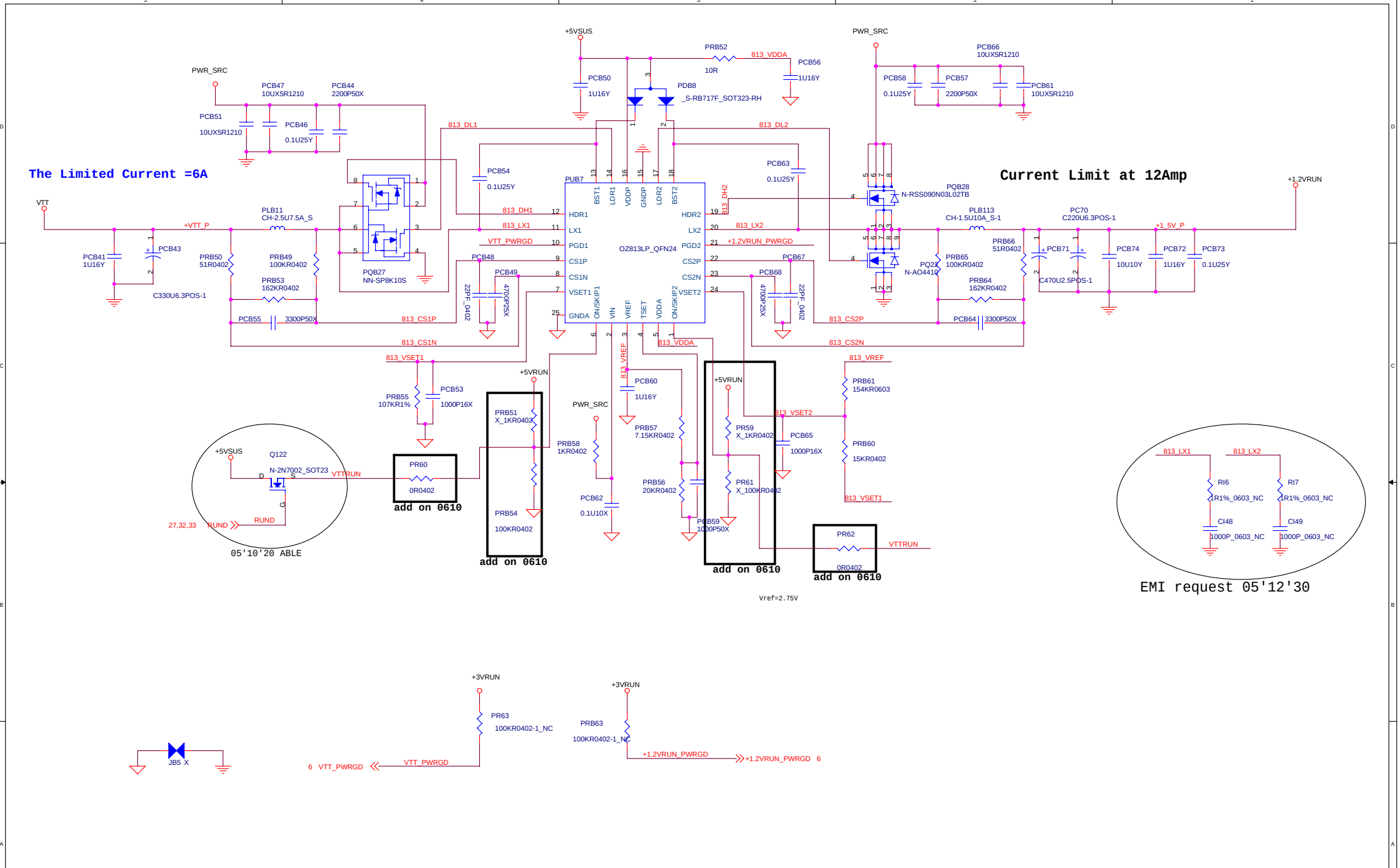

MICRO-STAR INT'L CO.,LTD.

Title: +1_2VRUN , VTT POWER

Size: Custom | Document Number: MS-1412 | Rev: 1.1

Date: Wednesday, November 29, 2006 | Sheet 34 of 41

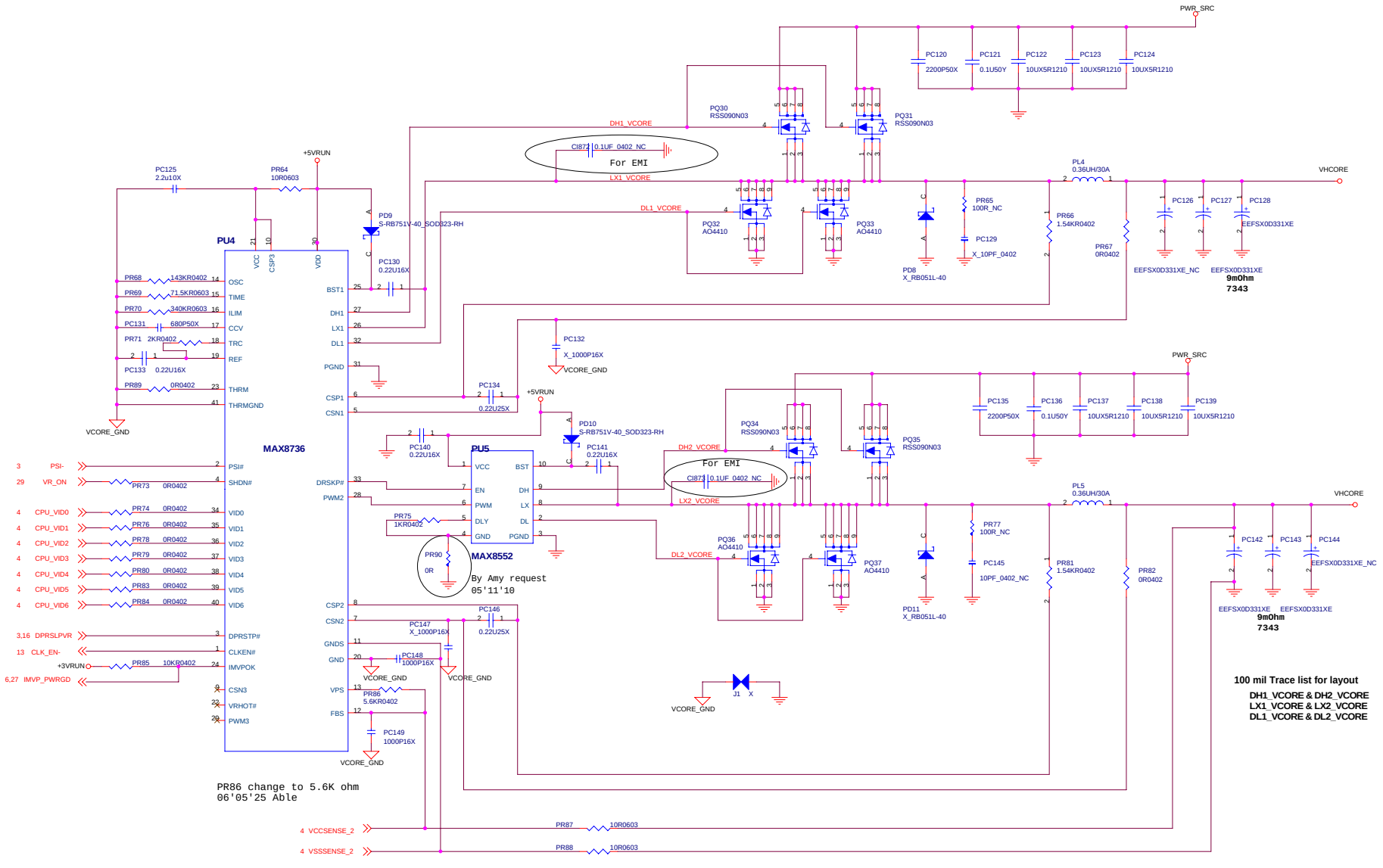

Title	CPU POWER
Size	C
Document Number	MS-1412
Rev	1.1
Date	Wednesday, November 29, 2006
Sheet	35 of 41

MICRO-STAR INT'L CO.,LTD.

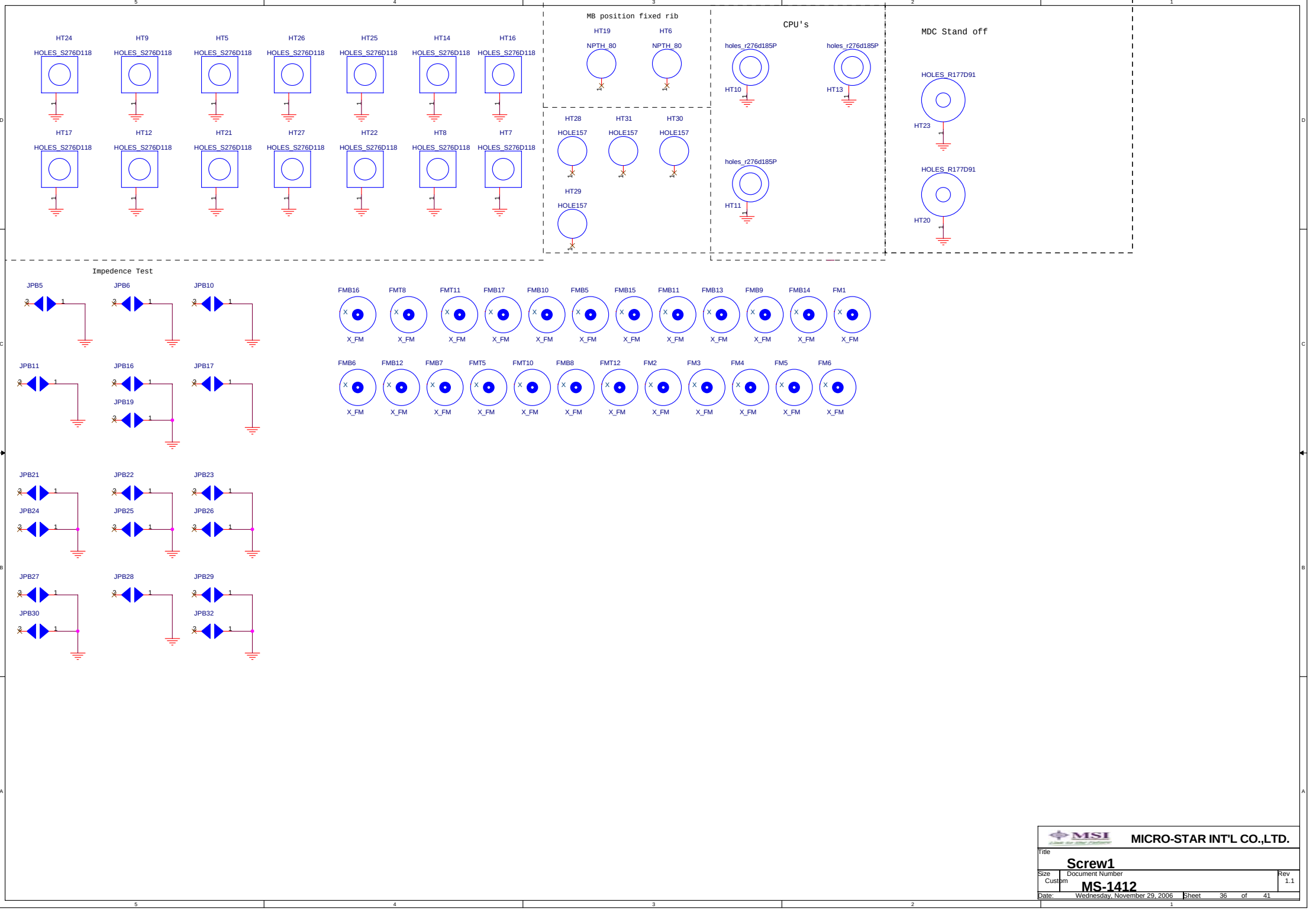

MICRO-STAR INT'L CO.,LTD.

Title: Screw1

Size: Custom | Document Number: MS-1412 | Rev: 1.1

Date: Wednesday, November 29, 2006 | Sheet 36 of 41

U217
South Brige AL FOIL for EMI
South Brige AL FOIL

PCB0
MS10241 PCB
健鼎無錫

U101
MDC Module
MDC_Module

U102
PCMCIA R-Eject
PCMCIA-EJECT_NC
E21-1022010-H21

U107
PCMCIA Mylar
PCMCIA_MYLAR

U214
NB MYLAR
NB_MYLAR

U215
RJ45 MYLAR
RJ45_MYLAR

U216
DDR MYLAR
DDR_MYLAR

SCREW1
Screw
Screw

SCREW2
Screw
Screw

SCREW4
Screw
Screw

SCREW5
Screw
Screw

SCREW11
Screw
Screw

U218
HDD MYLAR
HDD_MYLAR

U219
HDD MYLAR
HDD_MYLAR

U220
DDR MYLAR
DDR_MYLAR

SCREW7
Screw
Screw

U104
M/B Mylar
M/B_MYLAR

SCREW8
Screw
Screw

SCREW6
Screw
Screw

U110
MB_HD_ MYLAR
HD_MYLAR

U111
CARD READER MYLAR
CARD_READER_MYLAR

U221
BIOS LABEL
BIOS_LABEL

SCREW3
Screw
Screw

BAT1
RTC Battery
RTC battery

SCREW9
Screw
Screw

U103
NEW CARD COVER
PCI-EXPRESS-CARD
E23-1016011-T01

U109
PCI-E Mylar
PCI-E_MYLAR

MSI MICRO-STAR INTERNATIONAL
Link to the Future
MICRO-STAR INT'L CO.,LTD.

Title: Screw2

Size	Document Number	Rev
A	MS-1412	1.1

Date: Wednesday, November 29, 2006 Sheet 37 of 41

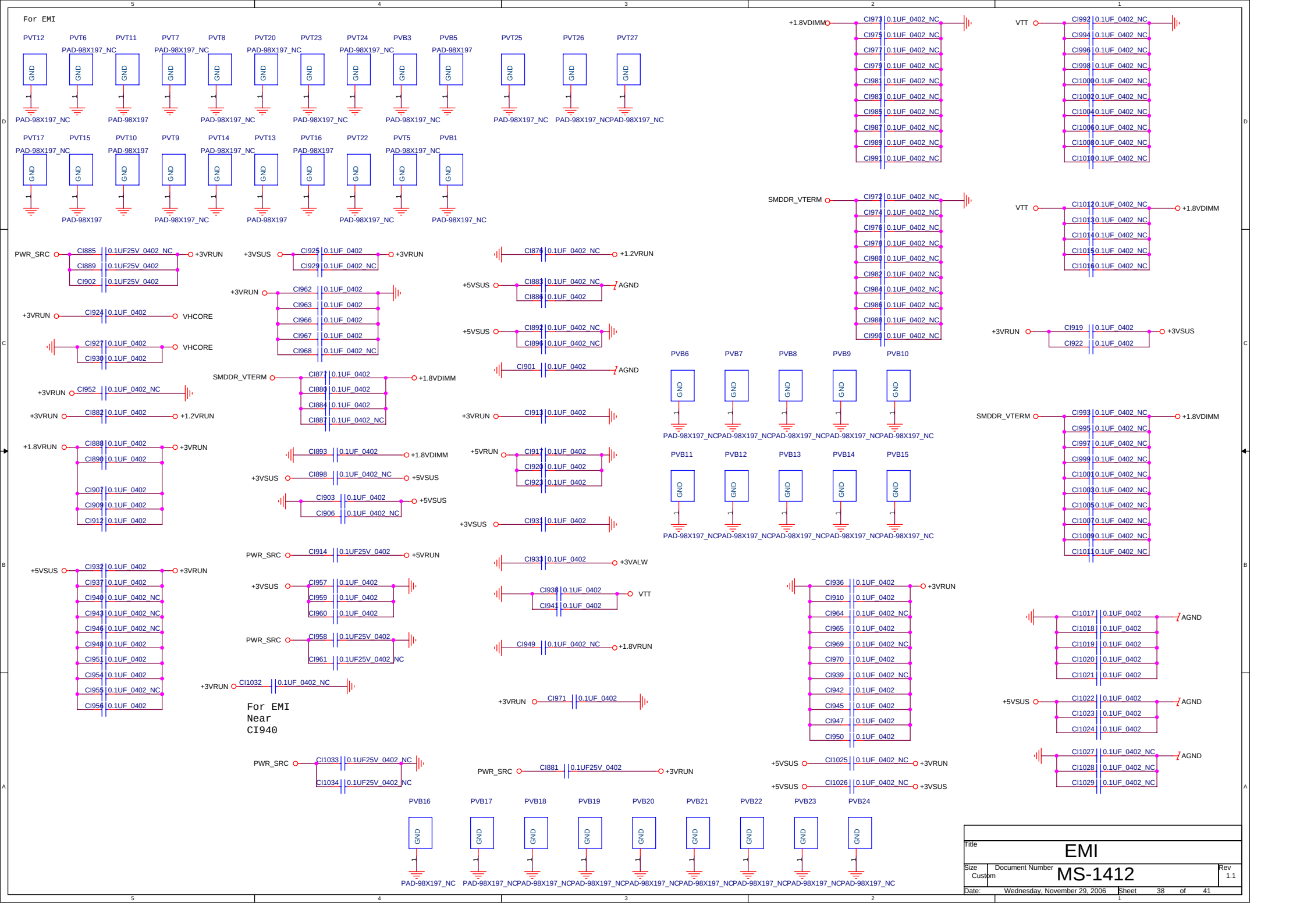
For EMI
PVT12 PVT6 PVT11 PVT7 PVT8 PVT20 PVT23 PVT24 PVB3 PVB5 PVT25 PVT26 PVT27
PAD-98X197_NC PAD-98X197 PAD-98X197_NC PAD-98X197_NC PAD-98X197_NC PAD-98X197_NC PAD-98X197_NC PAD-98X197_NC PAD-98X197_NC PAD-98X197_NC PAD-98X197_NC
PVT17 PVT15 PVT10 PVT9 PVT14 PVT13 PVT16 PVT22 PVT5 PVB1
PAD-98X197_NC PAD-98X197 PAD-98X197_NC PAD-98X197 PAD-98X197_NC PAD-98X197 PAD-98X197_NC PAD-98X197_NC PAD-98X197_NC PAD-98X197_NC
GND
PWR_SRC CI885 0.1UF25V_0402_NC +3VRUN
CI889 0.1UF25V_0402
CI902 0.1UF25V_0402
+3VRUN CI924 0.1UF_0402 VHCORE
CI927 0.1UF_0402 VHCORE
CI930 0.1UF_0402
+3VRUN CI952 0.1UF_0402_NC
+3VRUN CI882 0.1UF_0402 +1.2VRUN
+1.8VRUN CI888 0.1UF_0402 +3VRUN
CI890 0.1UF_0402
CI907 0.1UF_0402
CI909 0.1UF_0402
CI912 0.1UF_0402
+5VSUS CI932 0.1UF_0402 +3VRUN
CI937 0.1UF_0402
CI940 0.1UF_0402_NC
CI943 0.1UF_0402_NC
CI946 0.1UF_0402_NC
CI948 0.1UF_0402
CI951 0.1UF_0402
CI954 0.1UF_0402
CI955 0.1UF_0402_NC
CI956 0.1UF_0402
+3VSUS CI925 0.1UF_0402 +3VRUN
CI929 0.1UF_0402_NC
+3VRUN CI962 0.1UF_0402
CI963 0.1UF_0402
CI966 0.1UF_0402
CI967 0.1UF_0402
CI968 0.1UF_0402_NC
SMDDR_VTERM CI877 0.1UF_0402 +1.8VDIMM
CI880 0.1UF_0402
CI884 0.1UF_0402
CI887 0.1UF_0402_NC
CI893 0.1UF_0402 +1.8VDIMM
+3VSUS CI898 0.1UF_0402_NC +5VSUS
CI903 0.1UF_0402 +5VSUS
CI906 0.1UF_0402_NC
PWR_SRC CI914 0.1UF25V_0402 +5VRUN
+3VSUS CI957 0.1UF_0402
CI959 0.1UF_0402
CI960 0.1UF_0402
PWR_SRC CI958 0.1UF25V_0402
CI961 0.1UF25V_0402_NC
+3VRUN CI1032 0.1UF_0402_NC
For EMI
Near
CI940
PWR_SRC CI1033 0.1UF25V_0402_NC
CI1034 0.1UF25V_0402_NC
CI876 0.1UF_0402_NC +1.2VRUN
+5VSUS CI883 0.1UF_0402_NC AGND
CI886 0.1UF_0402
+5VSUS CI892 0.1UF_0402_NC
CI896 0.1UF_0402_NC
CI901 0.1UF_0402 AGND
+3VRUN CI913 0.1UF_0402
+5VRUN CI917 0.1UF_0402
CI920 0.1UF_0402
CI923 0.1UF_0402
+3VSUS CI931 0.1UF_0402
CI933 0.1UF_0402 +3VALW
CI938 0.1UF_0402 VTT
CI941 0.1UF_0402
CI949 0.1UF_0402_NC +1.8VRUN
+3VRUN CI971 0.1UF_0402
PWR_SRC CI881 0.1UF25V_0402 +3VRUN
+1.8VDIMM CI973 CI975 CI977 CI979 CI981 CI983 CI985 CI987 CI989 CI991 0.1UF_0402_NC
SMDDR_VTERM CI972 CI974 CI976 CI978 CI980 CI982 CI984 CI986 CI988 CI990 0.1UF_0402_NC
PVB6 PVB7 PVB8 PVB9 PVB10
PAD-98X197_NC PAD-98X197_NC PAD-98X197_NC PAD-98X197_NC PAD-98X197_NC
PVB11 PVB12 PVB13 PVB14 PVB15
PAD-98X197_NC PAD-98X197_NC PAD-98X197_NC PAD-98X197_NC PAD-98X197_NC
PVB16 PVB17 PVB18 PVB19 PVB20 PVB21 PVB22 PVB23 PVB24
PAD-98X197_NC PAD-98X197_NC PAD-98X197_NC PAD-98X197_NC PAD-98X197_NC PAD-98X197_NC PAD-98X197_NC PAD-98X197_NC PAD-98X197_NC
CI936 0.1UF_0402 +3VRUN
CI910 0.1UF_0402
CI964 0.1UF_0402_NC
CI965 0.1UF_0402
CI969 0.1UF_0402_NC
CI970 0.1UF_0402
CI939 0.1UF_0402_NC
CI942 0.1UF_0402
CI945 0.1UF_0402
CI947 0.1UF_0402
CI950 0.1UF_0402
+5VSUS CI1025 0.1UF_0402_NC +3VRUN
+5VSUS CI1026 0.1UF_0402_NC +3VSUS
VTT CI992 CI994 CI996 CI998 CI1000 CI1002 CI1004 CI1006 CI1008 CI1010 0.1UF_0402_NC
VTT CI1012 0.1UF_0402_NC +1.8VDIMM
CI1013 CI1014 CI1015 CI1016 0.1UF_0402_NC
+3VRUN CI919 0.1UF_0402 +3VSUS
CI922 0.1UF_0402
SMDDR_VTERM CI993 0.1UF_0402_NC +1.8VDIMM
CI995 CI997 CI999 CI1001 CI1003 CI1005 CI1007 CI1009 CI1011 0.1UF_0402_NC
CI1017 CI1018 CI1019 CI1020 CI1021 0.1UF_0402 AGND
+5VSUS CI1022 CI1023 CI1024 0.1UF_0402 AGND
CI1027 CI1028 CI1029 0.1UF_0402_NC AGND
Title
EMI
Size Custom
Document Number MS-1412
Rev 1.1
Date: Wednesday, November 29, 2006
Sheet 38 of 41

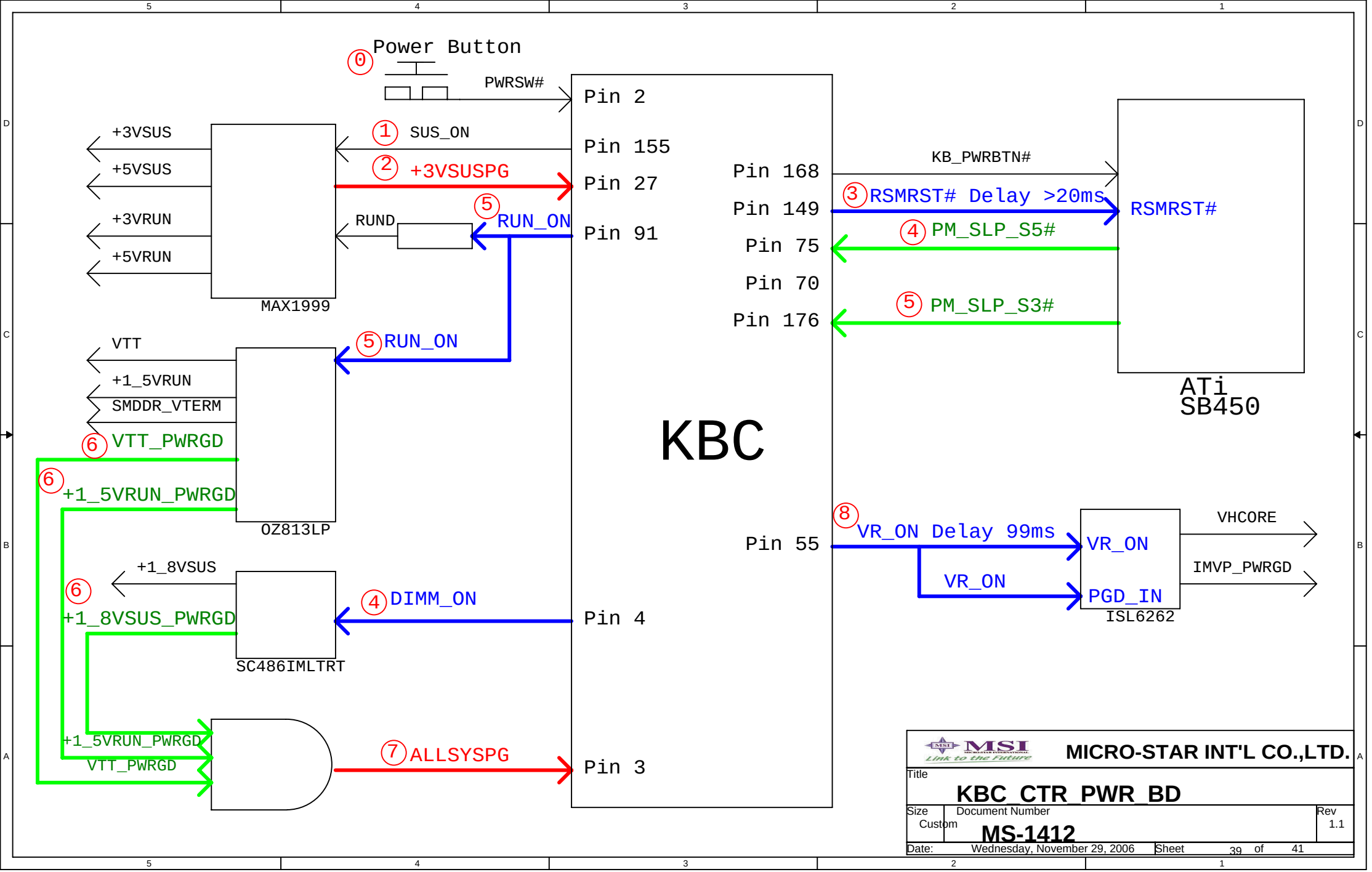

MICRO-STAR INT'L CO.,LTD.

Title: KBC_CTR_PWR_BD

Size: Custom | Document Number: MS-1412 | Rev: 1.1

Date: Wednesday, November 29, 2006 | Sheet 39 of 41

Power Up

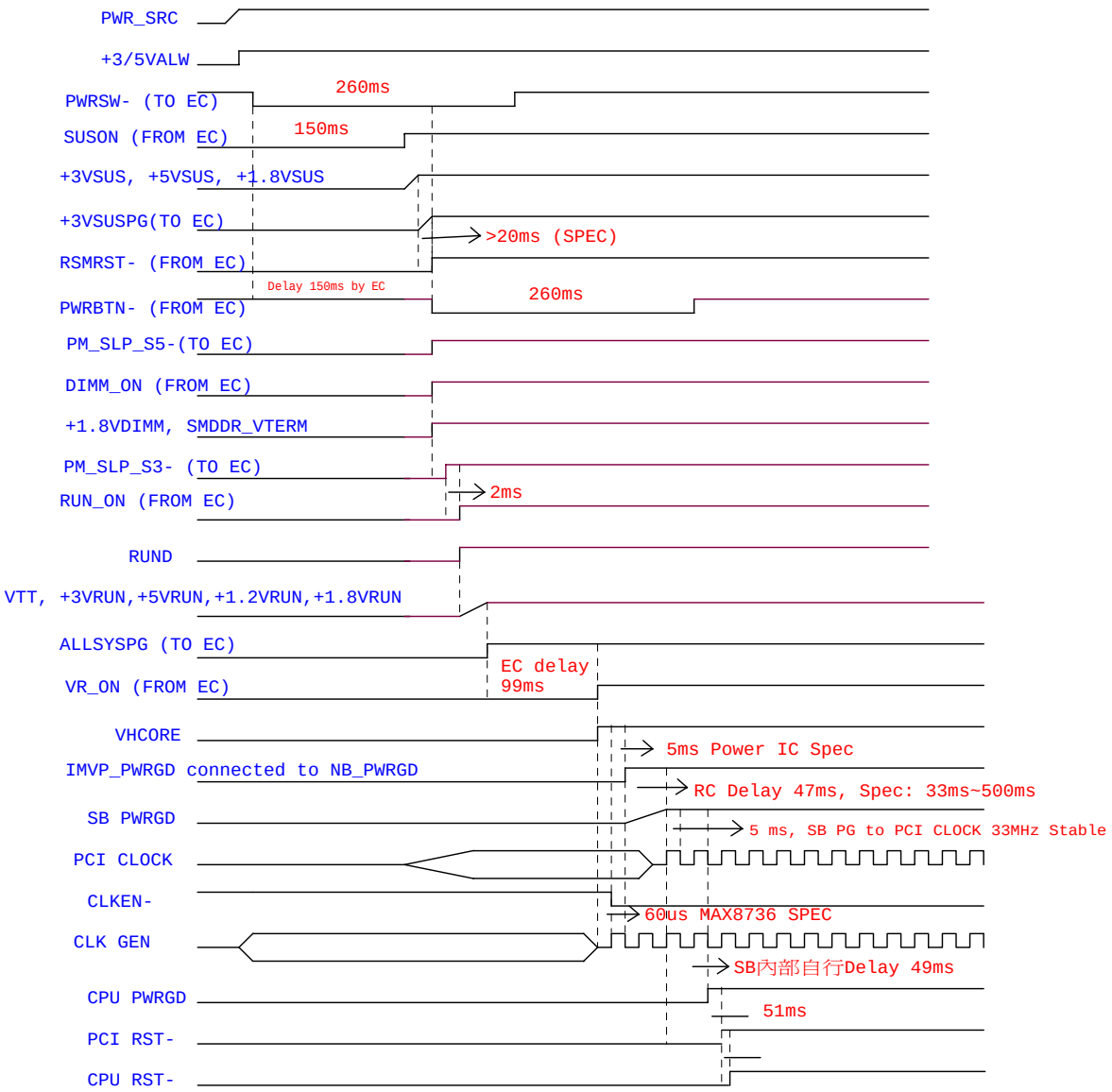

Power Down

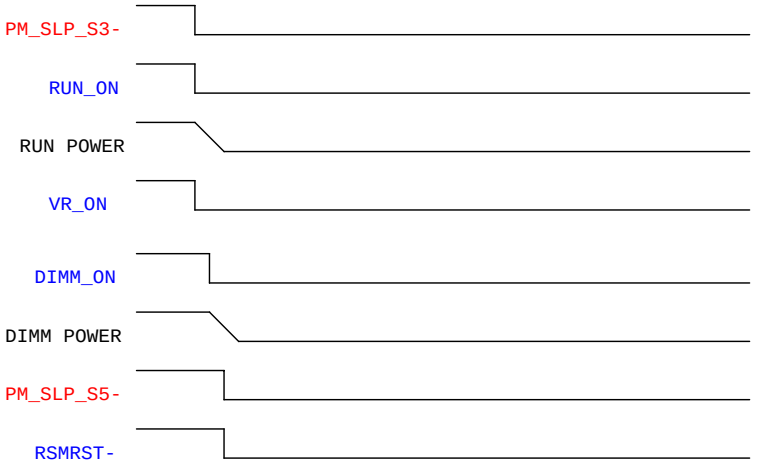

S3

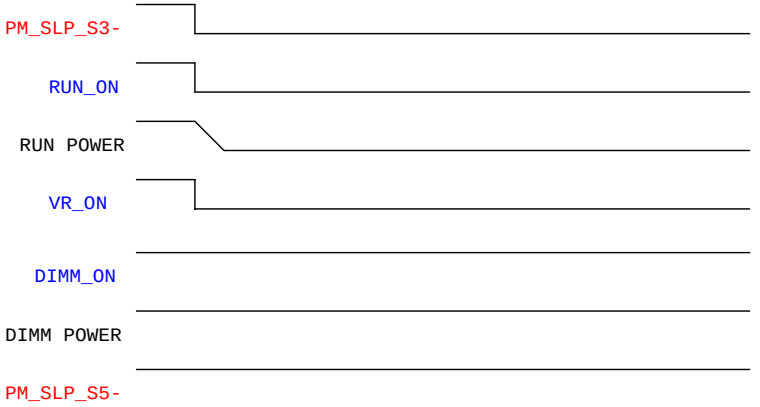

MICRO-STAR INT'L CO.,LTD.		
Title: Power Sequency		
Size: B	Document Number: MS-1412	Rev: 1.1
Date: Wednesday, November 29, 2006	Sheet 40 of 41	

1.Y7,YT6 32.768MHZ change to D04-0300800-T16 for RoHS. Able 06'05'15

2.Y8 25MHz change to D04-1001100-T16 for RoHS. Able 06'05'15

3.利用R955 or R956來決定LM86是吃+3VALW or +3VRUN. Able 06'05'25

4.Add R957用來做實驗。可調整阻值來量測RTC的耗電流. Able 06'05'25

MICRO-STAR INT'L CO.,LTD.

Title: change history

Size: Custom | Document Number: MS-1412 | Rev: 1.1

Date: Wednesday, November 29, 2006 | Sheet 41 of 41